CHAPTER 14

INTEGRITY ALL ULTREX SLIDING PATIO DOOR (IFSPD)

Unit Features 14.2
Minimum and Maximum Guidelines / Certified Sizes 14.3
Egress, Lite, Vent Measurements 14.4
Standard Sizes 2 and 3 Panel Doors and Transoms 14.5
Sizing Guidelines / Measurement Conversions 14.6
Elevations 14.7
Section Details – 3 3/8″ Jamb 14.8
Section Details – 4 9/16″ Jamb 14.9
Section Details – 6 9/16″ Jamb 14.10
Section Details – Transoms and Mullions 14.11
Divided Lite Options 14.12
Installation Suggestions 14.13

ATTENTION:

- Specifications and technical data are subject to change without notice.
- Number is parentheses () following measurements are the metric equivalents in millimeters rounded to the nearest whole number
- Allow 1/16″ (2) tolerance on all measurements.
- For answers to technical questions about Integrity products you may call our Integrity Support Line: 1–800–587–2712.
- Website: www.integritywindows.com

ALL ULTREX SLIDING PATIO DOOR

UNIT FEATURES

ALL ULTREX FRAME AND PANEL:

The frame and sash is made of Ultrex, an advanced fiberglass reinforced pultrusion material that is resistant to thermal conductance. Ultrex patented coating system meets all the requirements of AAMA 624−10. Exterior colors: Stone White, Pebble Gray, Bronze, Evergreen, Cashmere, or Ebony. Interior color coatings shall meet 00022716 in stone white.

Frame:

Standard jamb depth is 3 3/8″ (86), frame depth 4 15/32″ (114). The sill is composed of Ultrex.

Panel:

The panel is 1 1/4″ (29) thick with an Ultrex interior and exterior. Both the stile and rail share a common one−piece Ultrex profile that gives structure to the panel, which utilizes injection molded corner keys. Overall stiles and rails are 2 1/8″ (54).

JAMB EXTENSION:

4 9/16″ (116) and 6 9/16″ (167) jamb extension available, factory applied or in lineal lengths for field application.

HARDWARE:

Standard Handle: Single point non−keyed zinc substrate handle lock. Handle set: interior and exterior selected separately. Available in Almond Frost. White, Brass PVD, Satin Nickel PVD, or Oil Rubbed Bronze PVD. Provides an interior thumb lever to engage the locking and unlocking of the operating panel. Keyed and keyed alike options are available. Handle is 7 5/8″ tall, 2 21/32″ wide by 1 13/16″ deep.

Optional Handle Set: Single point non−keyed zinc substrate handle lock, Handle set interior and exterior selected separately. Available in White, Almond Frost, and Bronze. Provides an interior thumb lever to engage the locking and unlocking of the operating panel. Keyed and keyed alike option are available. Handle is 7 3/8″ tall, 29/32″ wide by 1 11/32″ deep.

INSTALLATION:

Factory applied folding nailing fin is standard. Installation brackets for masonry application are available in lieu of folding nailing fin, if specified on the order.

WEATHER STRIP:

Beige colored PVC standard. All units are constructed with weather strip at all panel perimeter joints. Jambs and head jambs utilize a leaf−type weather strip. Bottom rail utilizes a rigid with pile against the sill. Interlock uses a full length individual pile weather strip.

SCREEN:

Top hung extruded aluminum screens to match exterior Ultrex color. Single operating panel only. Includes all mounting and latching hardware.

GLAZING:

All units manufactured with 3/4″ (19) insulating glass LoĒ^2−272®, LoĒ^3−366® OR LoĒ−180™ including argon gas fill. Tempered obscure is available as an option. All glass is of a select quality complying with ASTM C 1036. Insulating glass is manufactured and tested to pass level ASTM E 2190 and is IGCC certified. The glazing seal is a silicone bedding on both interior and exterior surfaces utilized in a sandwich style sash. STC/OITC values are available for 3.1/3.1 standard glass. Optional 3.1/4.7 STC/OITC Upgrade glass is available. STC and OITC ratings are tested in accordance with ASTM E 90-09. See the Product Performance chapter for values.

GRILLES−BETWEEN−THE−GLASS (GBG):

11/16″ (17) contoured aluminum bar placed between two panes of glass. Pattern: standard rectangular pattern, or 9−lite prairie cut per panel or 6−lite prairie cut on transom. Exterior color determined by frame color; white interior.

ACCESSORIES:

Field applied j−channel, a 1″ (25) or a 3″ (76) frame expander. Factory applied sheet rock return for 1/2″ (13) or 5/8″ (16) drywall, or a 3/4″ (19) receiver. General: mull kits are available for field assembly. Kits include instructions, mull covers, mull plugs and brackets.

EXTERIOR CASING:

Non−integral to the unit. Fastened to the exterior wall with barb and kerf 2″ (51) brick mould available as a header and jamb surround. 3 1/2″ (89) flat casing available as a header and jamb surround. Also available with 1″ (25) ranch style header overhang.

ALL ULTREX SLIDING PATIO DOOR

MINIMUM AND MAXIMUM GUIDELINES / CERTIFIED SIZES

Minimum and Maximum Guidelines										
Unit Type	Min Rough Opening					Max Rough Opening				
	Width		x	Height		Width		x	Height	
	in	mm	×	in	mm	in	mm	×	in	mm
2–Panel Operator	60	(1524)	×	80	(2032)	72	(1829)	×	96	(2438)
3–Panel Operator	108	(2743)	×	80	(2032)	108	(2743)	×	96	(2438)
2 – Panel Direct Glaze Transom	60	(1524)	×	12	(305)	72	(1829)	×	18	(457)
3 – Panel Direct Glaze Transom	108	(2743)	×	12	(305)	108	(2743)	×	18	(457)

NOTE:
Special sizes are available in 1/64” increments, not to exceed the maximum or minimum sizes listed above.

Certified Sizes and Ratings – Sliding Patio Door					
Panel Height	Panel Configuration	Panel Call Number			
		5–0	5–10	6–0	9–0
6–8	**OX/XO**	R–PG30–SD	R–PG30–SD	R–PG30–SD	N/A
6–10	**OX/XO**	R–PG30–SD	N/A	R–PG30–SD	N/A
8–0	**OX/XO**	R–PG30–SD	N/A	R–PG30–SD	N/A
6–8	**XOO/OOX/OXO**	N/A	N/A	N/A	R–PG30–SD
6–10	**XOO/OOX/OXO**	N/A	N/A	N/A	R–PG30–SD
8–0	**XOO/OOX/OXO**	N/A	N/A	N/A	R–PG30–SD

ALL ULTREX SLIDING PATIO DOOR

EGRESS, LITE, AND VENT MEASUREMENTS

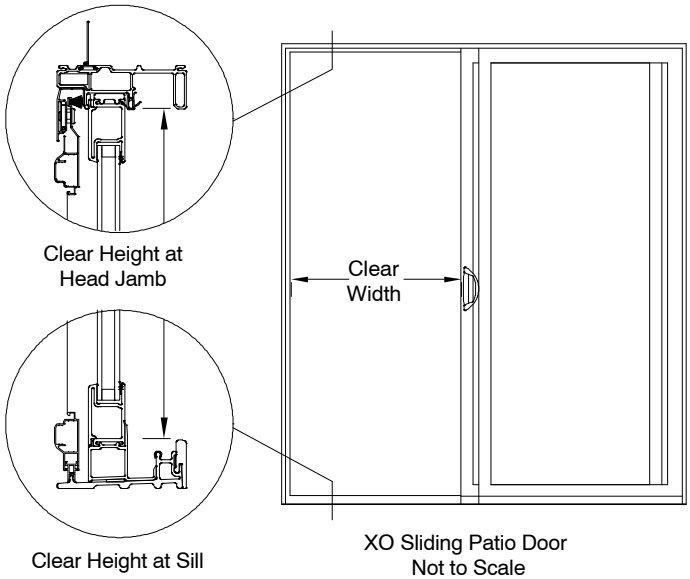

Two Panel Egress Calculations Minimum Value for Net Clear Opening		
20 inches	Egress Opening Width (inches)	=(Frame OM Width / 2) – 5.682
24 inches	Egress Opening Height (inches)	=Frame OM Height – 4.227
5.7 square feet	Egress Opening Area (sq. ft.)	=(Egress Width x Egress Height) / 144

Net Clear Opening Sliding Patio Door			
Width			
Unit Type	**Call Number**	**Net Clear Openings**	
		ft–in	**mm**
1 Panel Operator	5–0	2–0 1/16	(611)
	5–10	2–5 5/16	(745)
	6–0	2–6 1/16	(764)
	6–0 NCO	2–8 5/32	(817)
2 Panel Operator	9–0	2–6 1/16	(764)
Height			
Unit Type	**Call Number**	**Net Clear Openings**	
		ft – in	**mm**
All Configurations	6–8	6–3 9/32	(1912)
	6–10	6–5 9/32	(1963)
	8–0	7–7 9/32	(2318)

ALL ULTREX SLIDING PATIO DOOR

STANDARD SIZES: 2 AND 3 PANEL DOORS AND TRANSOMS

Standard Sliding Patio Door Unit Measurements Width													
Unit Type	Call Number	Masonry Opening		Rough Opening		Frame Size		Panel OM		Daylight Opening		Glass Size	
		ft – in	mm	ft – in	mm	ft – in	mm	ft–in	mm	ft – in	mm	ft–in	mm
XO, OX	5–0	5–0	(1524)	5–0	(1524)	4–11 1/2	(1511)	2–5 13/32	(747)	2–1	(635)	2–2 1/4	(667)
	5–10	5–10 1/2	(1791)	5–10 1/2	(1791)	5–10	(1778)	2–10 21/32	(880)	2–6 1/4	(768)	2–7 1/2	(800)
	6–0	6–0	(1829)	6–0	(1829)	5–11 1/2	(1816)	2–11 13/32	(899)	2–7	(787)	2–8 1/4	(819)
OOX, XOO OXO	9–0	9–0	(2743)	9–0	(2743)	8–11 1/2	(2731)	2–11 13/32	(899)	2–7	(787)	2–8 1/4	(819)
Height													
Unit Type	Call Number	Masonry Opening		Rough Opening		Frame Size		Panel OM		Daylight Opening		Glass Size	
		ft – in	mm	ft – in	mm	ft – in	mm	ft–in	mm	ft – in	mm	ft – in	mm
All Configurations	6–8	6–7 3/4	(2026)	6–8	(2032)	6–7 1/2	(2019)	6–4 15/16	(1954)	6–0 1/2	(1842)	6–1 3/4	(1873)
	6–10	6–9 3/4	(2076)	6–10	(2083)	6–9 1/2	(2070)	6–6 15/16	(2004)	6–2 1/2	(1892)	6–3 3/4	(1924)
	8–0	7–11 3/4	(2432)	8–0	(2438)	7–11 1/2	(2426)	7–8 15/16	(2360)	7–4 1/2	(2248)	7–5 3/4	(2280)

NOTE:
Special sizes are available in 1/64” increments, not to exceed the maximum or minimum sizes listed on min max page

Standard Sliding Patio Direct Glaze Transom Measurements Width											
Unit Type	Call Number	Masonry Opening		Rough Opening		Frame Size		Daylight Opening		Glass Size	
		ft–in	mm	ft–in	mm	ft–in	mm	ft–in	mm	ft–in	mm
All Configurations	5–0	5–0	(1524)	5–0	(1524)	4–11 1/2	(1511)	4–8 1/16	(1424)	4–9 1/4	(1454)
	5–10	5–10 1/2	(1791)	5–10 1/2	(1791)	5–10	(1778)	5–6 9/16	(1691)	5–7 3/4	(1721)
	6–0	6–0	(1829)	6–0	(1829)	5–11 1/2	(1816)	5–8 1/16	(1729)	5–9 1/4	(1759)
	9–0	9–0	(2743)	9–0	(2743)	8–11 1/2	(2731)	8–8 1/16	(2643)	8–9 1/4	(2673)
Height											
Unit Type	Call Number	Opening		Rough Opening		Frame Size		Daylight Opening		Glass Size	
		ft–in	mm	ft–in	mm	ft–in	mm	ft–in	mm	ft–in	mm
All Configurations	1–0	0–11 3/4	(298)	1–0	(305)	0–11 1/2	(292)	0–8 1/16	(205)	0–9 1/4	(235)
	1–6	1–5 3/4	(451)	1–6	(457)	1–5 1/2	(445)	1–2 1/16	(357)	1–3 1/4	(387)

ALL ULTREX SLIDING PATIO DOOR

SIZING GUIDELINES / MEASUREMENT CONVERSIONS

Multiple assemblies can be factory mulled:
up to 1 unit wide by 2 units high

FACTORY MULLED MAXIMUM ROUGH OPENING not to exceed 72″ X 100 1/2″

NOTE: FIELD MULLING BEYOND 110″ x 112″ IS NOT RECOMMENDED.

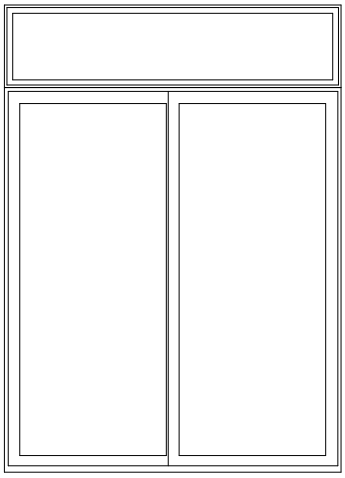

ROUGH OPENING TABLE FOR ASSEMBLIES

WIDTH: ADD all unit Rough Opening widths = Total Assembly Rough Opening width.
HEIGHT: ADD all unit Rough Opening heights = Total Assembly Rough Opening height.

MEASUREMENT CONVERSIONS				
PATIO DOOR	**WIDTH**		**HEIGHT**	
Rough Opening to	**Imperial**	**Metric**	**Imperial**	**Metric**
Masonry Opening	0		– 1/4″	– 6 mm
OM of Frame	– 1/2″	– 13 mm	– 1/2″	– 13 mm
OM of Panel (2 wide)	(÷ 2) – 19/32″	(÷ 2) – 15 mm	– 3 3/32″	– 79 mm
OM of Panel (3 wide)	(÷ 3) – 19/32″	(÷ 3) – 15 mm	– 3 3/32″	– 79 mm
Daylight Opening (2 wide)	(÷ 2) – 5″	(÷ 2) – 127 mm	– 7 1/2″	– 191 mm
Daylight Opening (3 wide)	(÷ 3) – 5″	(÷ 3) – 127 mm	– 7 1/2″	– 191 mm
OM of Glass (2 wide)	(÷ 2) – 3 3/4″	(÷ 2) – 95 mm	– 6 1/4″	– 159 mm
OM of Glass (3 wide)	(÷ 3) – 3 3/4″	(÷ 3) – 95 mm	– 6 1/4″	– 159 mm
OM of Screen (2 wide)	(÷ 2) – 13/16″	(÷ 2) – 21 mm	– 2 1/4″	– 57 mm
OM of Screen (3 wide)	(÷ 3) – 13/16″	(÷ 3) – 21 mm	– 2 1/4″	– 57 mm
TRANSOM				
Masonry Opening	0		– 1/4″	– 6 mm
OM of Frame	– 1/2″	– 13 mm	– 1/2″	– 13 mm
Daylight Opening	– 3 15/16″	– 100 mm	– 3 15/16″	– 100 mm
OM of Glass	– 2 3/4″	– 70 mm	– 2 3/4″	– 70 mm

ALL ULTREX SLIDING PATIO DOOR

ELEVATIONS 2 AND 3 PANEL DOORS / TRANSOMS Not To Scale

Mas. Opg.	5–0 (1524)	5–10 1/2 (1791)	6–0 (1829)
Rgh. Opg.	5–0 (1524)	5–10 1/2 (1791)	6–0 (1829)
Frame Size	4–11 1/2 (1511)	5–10 (1778)	5–11 1/2 (1816)

6–7 3/4 (2026)
6–8 (2032)
6–7 1/2 (2019)

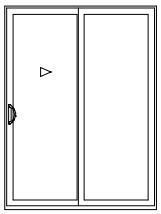

IFSPD 5068 XO

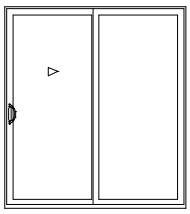

IFSPD 51068 XO

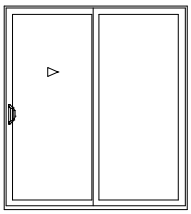

IFSPD 6068 XO

6–9 3/4 (2076)
6–10 (2083)
6–9 1/2 (2070)

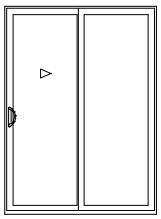

IFSPD 50610 XO

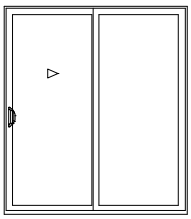

IFSPD 60610 XO

7–11 3/4 (2432)
8–0 (2438)
7–11 1/2 (2426)

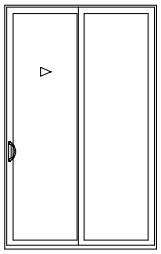

IFSPD 5080 XO

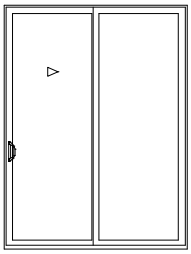

IFSPD 6080 XO

Mas. Opg.	9–0 (2743)	9–0 (2743)
Rgh. Opg.	9–0 (2743)	9–0 (2743)
Frame Size	8–11 1/2 (2731)	8–11 1/2 (2731)

6–7 3/4 (2026)
6–8 (2032)
6–7 1/2 (2019)

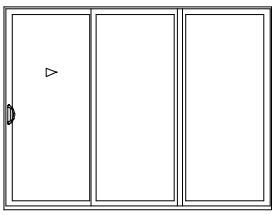

IFSPD 9068 XOO

6–9 3/4 (2076)
6–10 (2083)
6–9 1/2 (2070)

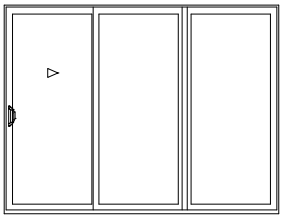

IFSPD 90610 XOO

7–11 3/4 (2432)
8–0 (2438)
7–11 1/2 (2426)

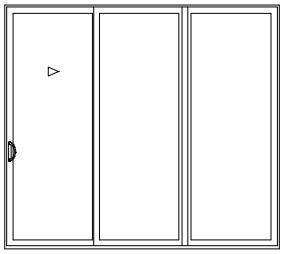

IFSPD 9080 XOO

Mas. Opg.
Rgh. Opg.
Frame Size

STANDARD TRANSOMS

Mas. Opg.	5–0 (1524)	5–10 1/2 (1791)
Rgh. Opg.	5–0 (1524)	5–10 1/2 (1791)
Frame Size	4–11 1/2 (1511)	5–10 (1778)

11 3/4 (298)
12 (305)
11 1/2 (292)

IFSPDDG 5010

IFSPDDG 51010

17 3/4 (451)
18 (457)
17 1/2 (445)

IFSPDDG 5016

IFSPDDG 51016

Mas. Opg.	6–0 (1829)	9–0 (2743)
Rgh. Opg.	6–0 (1829)	9–0 (2743)
Frame Size	5–11 1/2 (1816)	8–11 1/2 (2731)

11 3/4 (298)
12 (305)
11 1/2 (292)

IFSPDDG 6010

IFSPDDG 9010

17 3/4 (451)
18 (457)
17 1/2 (445)

IFSPDDG 6016

IFSPDDG 9016

Mas. Opg.
Rgh. Opg.
Frame Size

NOTE:
GBG lite cut is not equal, to align with Patio Door.

Equal lites are available.

Transoms with GBG lites may be manufactured to align with pattern below in door. Lite cut of GBG will only align with lite cut of door it is intended for.

OPERATION

2 Panel Units

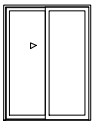

XO

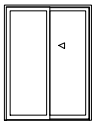

OX

3 Panel Units

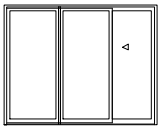

OOX

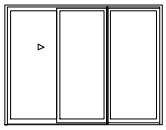

XOO

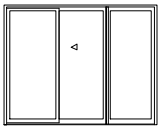

OXO Left

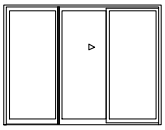

OXO Right

O = Stationary Panel
X = Operating Panel

All units viewed from exterior.

NOTE:
One lite is standard. Imperial and metric dimensions are shown metric dimensions are in millimeters.

ALL ULTREX SLIDING PATIO DOOR

SECTION DETAILS – 3 3/8″ Jambs Not to Scale

2 PANEL XO OPERATOR JAMB DETAIL

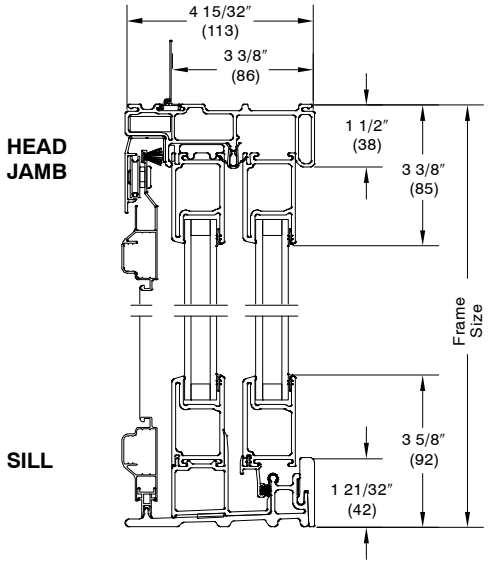

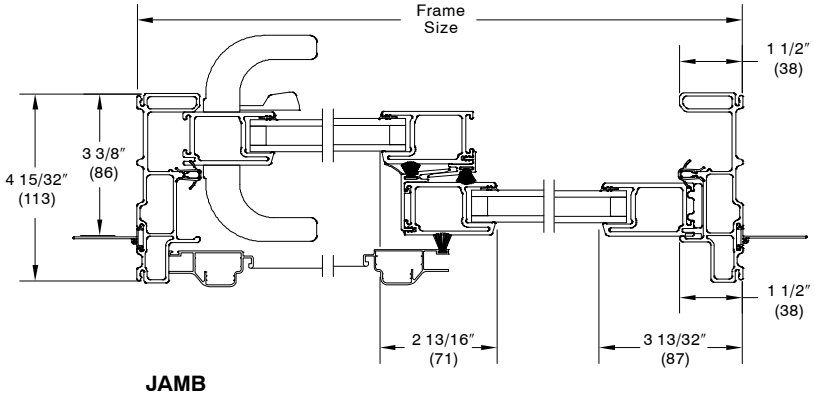

3 PANEL OXO OPERATOR JAMB DETAIL

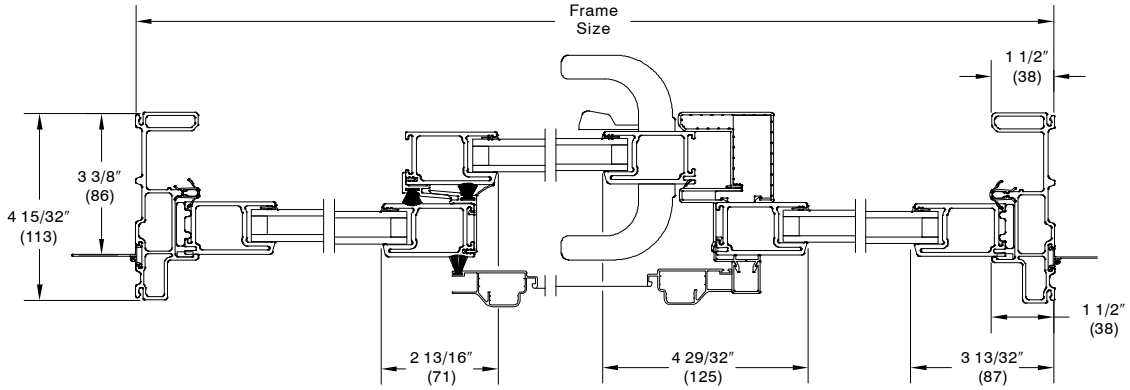

3 PANEL XOO OPERATOR JAMB DETAIL

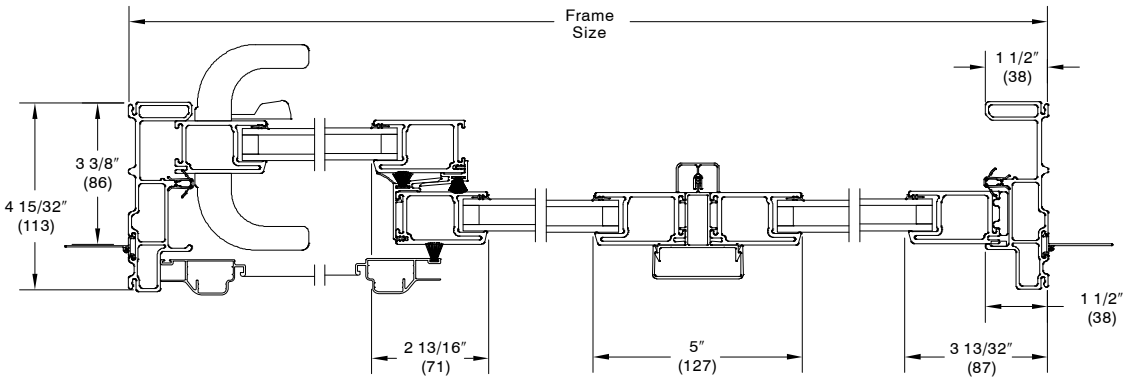

ALL ULTREX SLIDING PATIO DOOR

SECTION DETAILS – 4 9/16″ Jambs Not to Scale

2 PANEL XO OPERATOR JAMB DETAIL

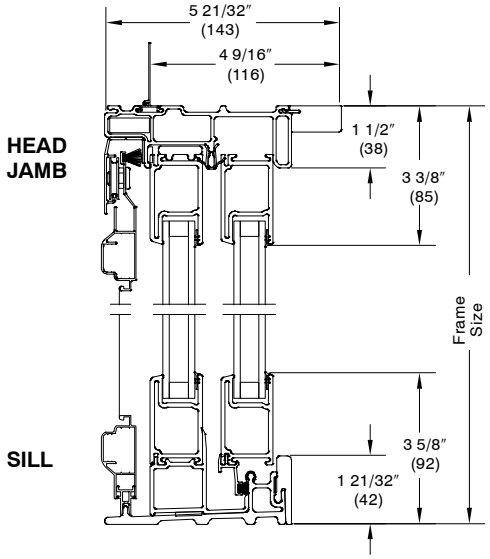

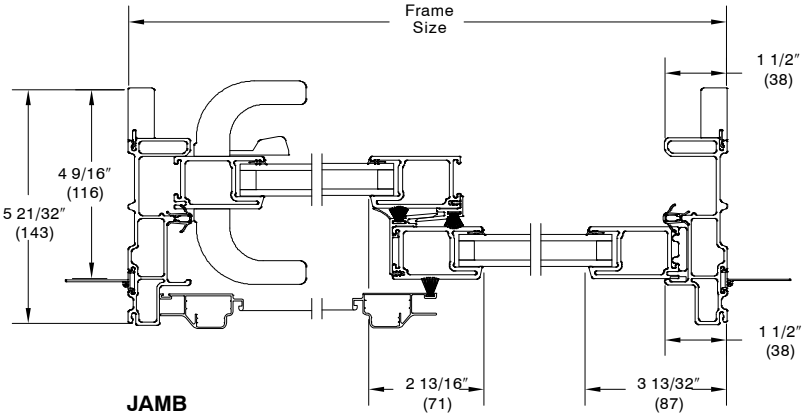

3 PANEL OXO OPERATOR JAMB DETAIL

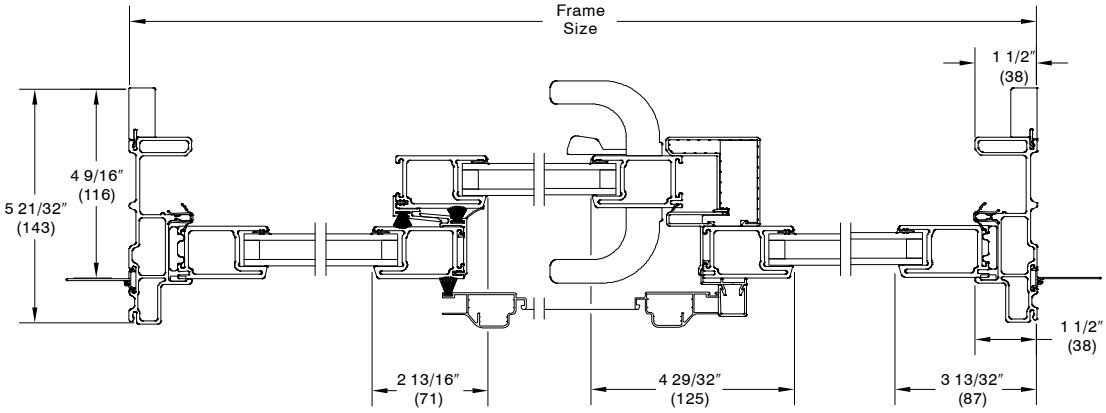

3 PANEL XOO OPERATOR JAMB DETAIL

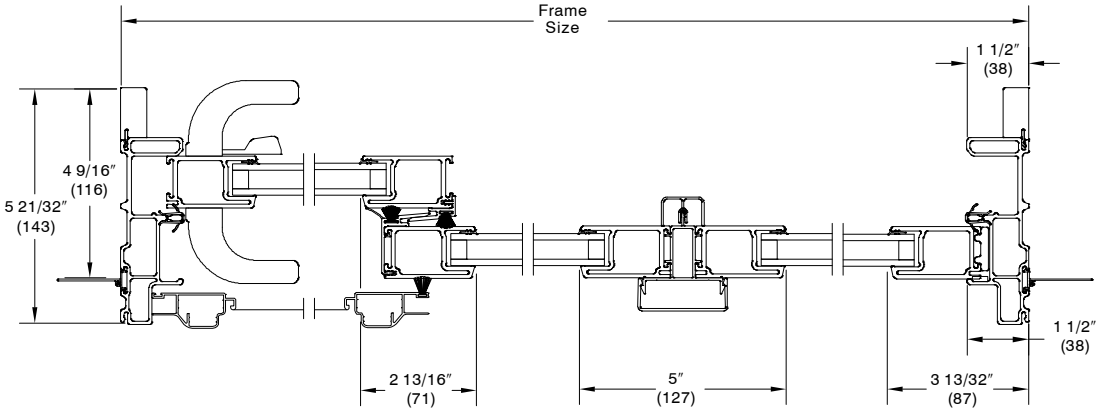

ALL ULTREX SLIDING PATIO DOOR

SECTION DETAILS – 6 9/16″ Jambs Not to Scale

2 PANEL XO OPERATOR JAMB DETAIL

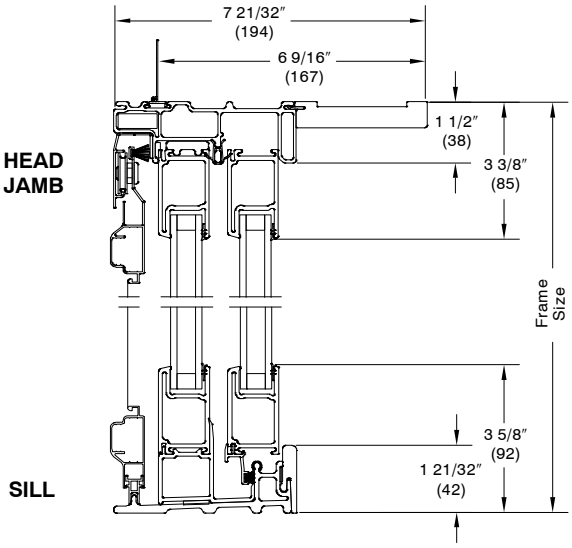

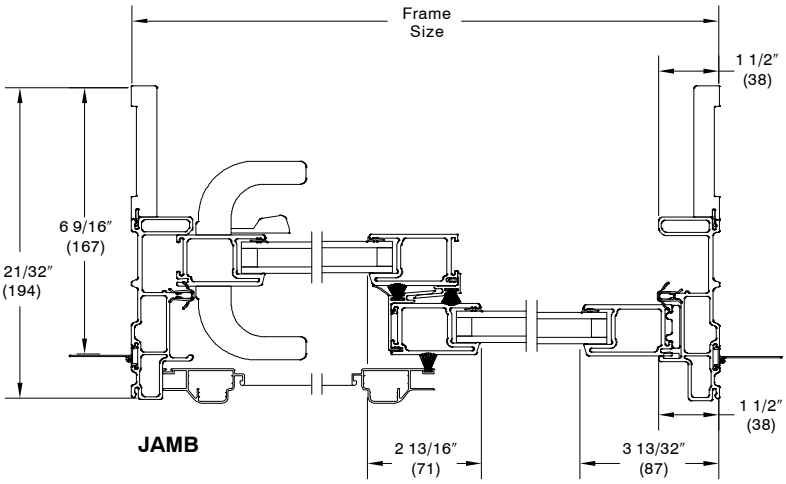

3 PANEL OXO OPERATOR JAMB DETAIL

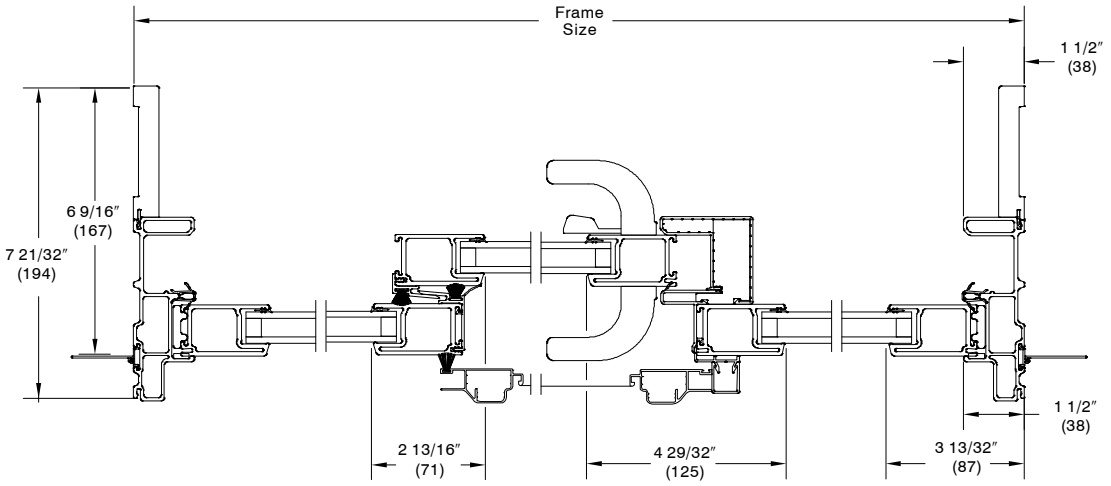

3 PANEL XOO OPERATOR JAMB DETAIL

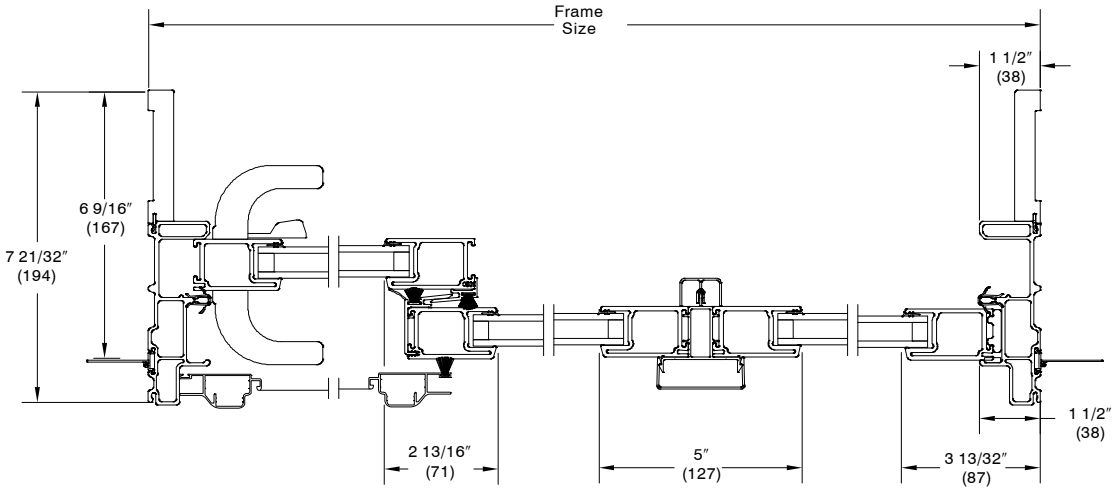

ALL ULTREX SLIDING PATIO DOOR

SECTION DETAILS – DIRECT GLAZE TRANSOM AND MULLIONS

4 9/16″ Jambs

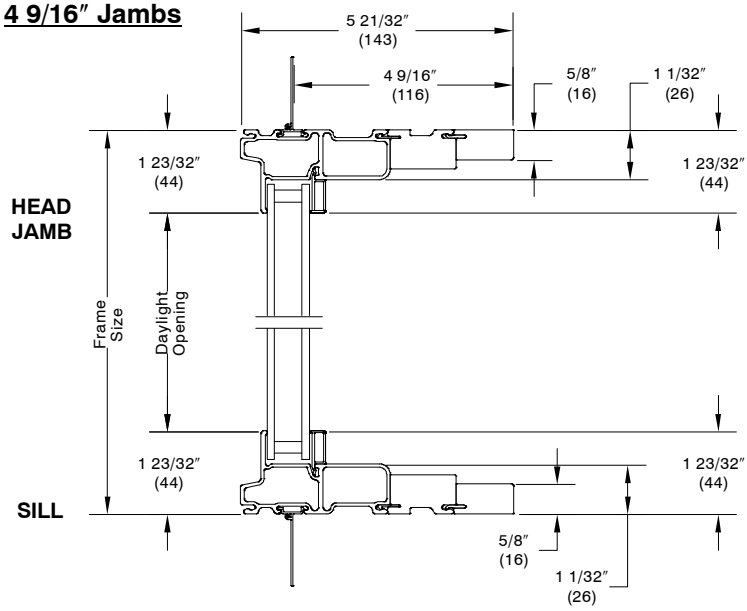

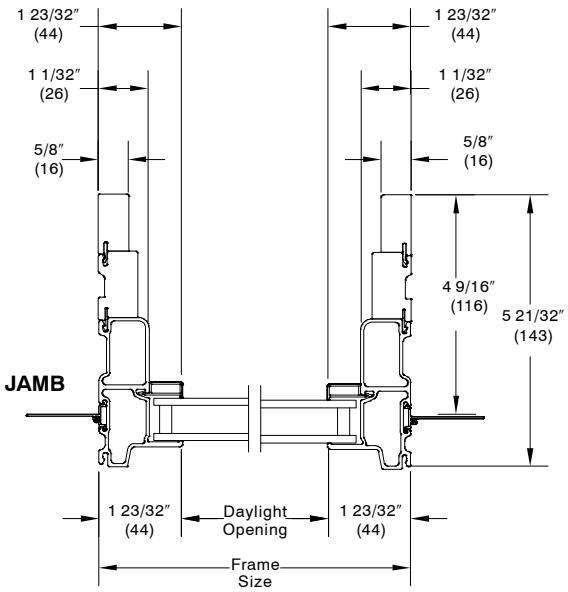

6 9/16″ Jambs

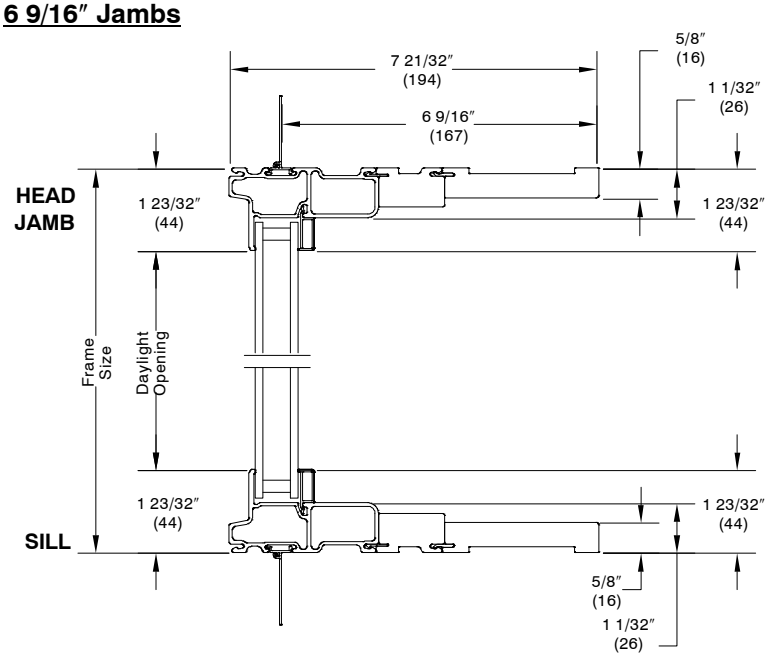

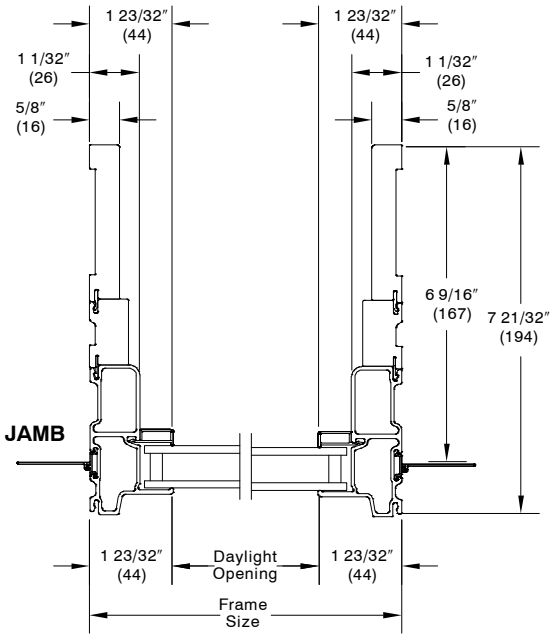

MULLIONS

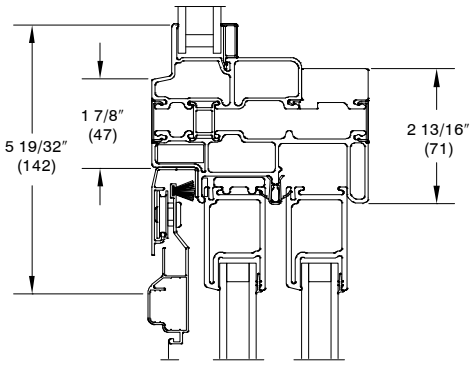

DIRECT GLAZE TRANSOM OVER PATIO DOOR

ALL ULTREX SLIDING PATIO DOOR

AVAILABLE DIVIDED LITE PATTERNS

Call #	Rectangular		Prairie
	Standard GBG	Optional GBG	GBG
SLIDING PATIO DOOR per panel			
5068	3W5H	2W5H	3W3H
50610	3W5H	2W5H	3W3H
5080	3W6H	2W6H	3W3H
51068	3W5H	2W5H	3W3H
6068	3W5H	2W5H	3W3H
60610	3W5H	2W5H	3W3H
6080	3W6H	2W6H	3W3H
9068	3W5H	2W5H	3W3H
90610	3W5H	3W5H	3W3H
9080	3W6H	2W6H	3W3H

* When special size unit RO's are between two CN, refer to the smaller CN shown for the default lite pattern.

DIVIDED LITE OPTIONS (Available in grilles–between–the–glass only)

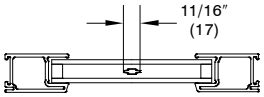

ALUMINUM GRILLE BETWEEN GLASS

2 Panel Door

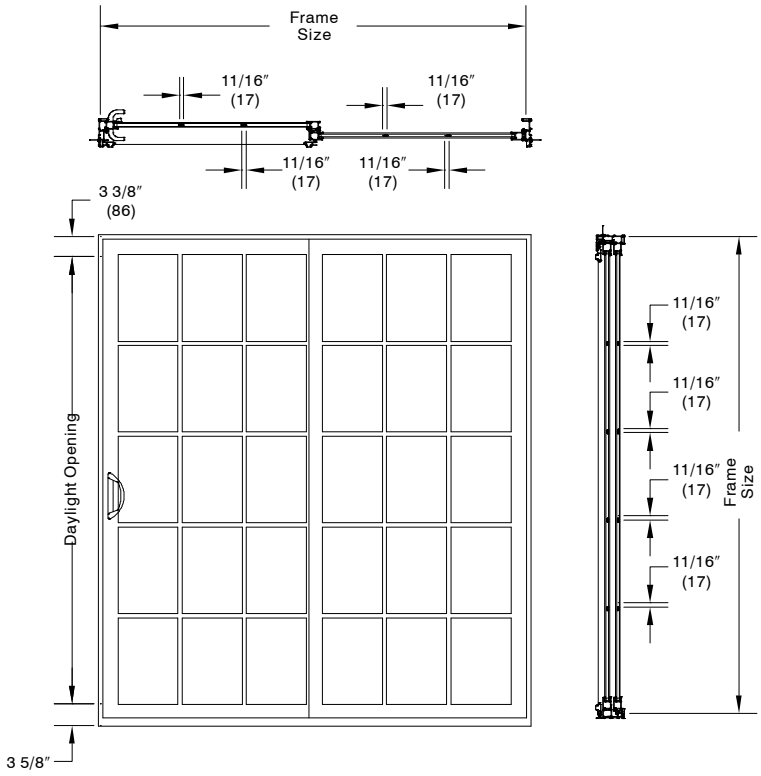

2 Panel Door
Showing Prairie Cut

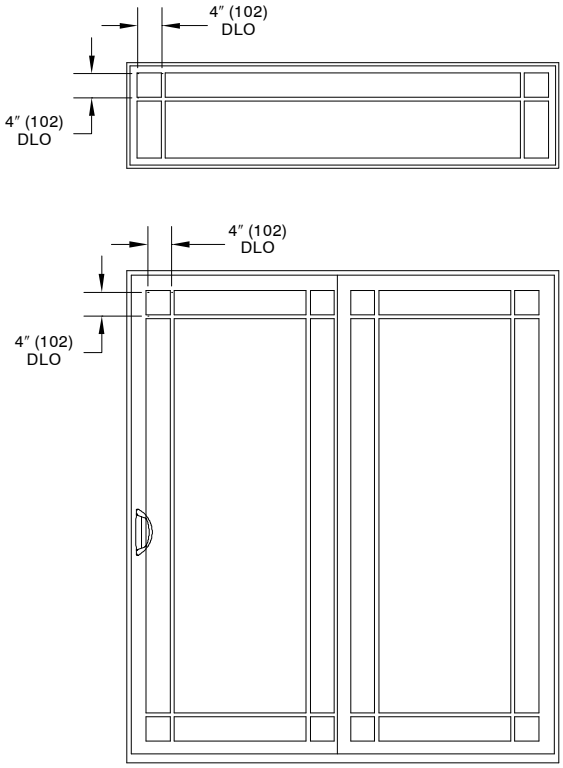

NOTE: * Optional 9 lite per panel Prairie cut.

ALL ULTREX SLIDING PATIO DOOR

INSTALLATION SUGGESTION Scale 3″ = 1′ 0″

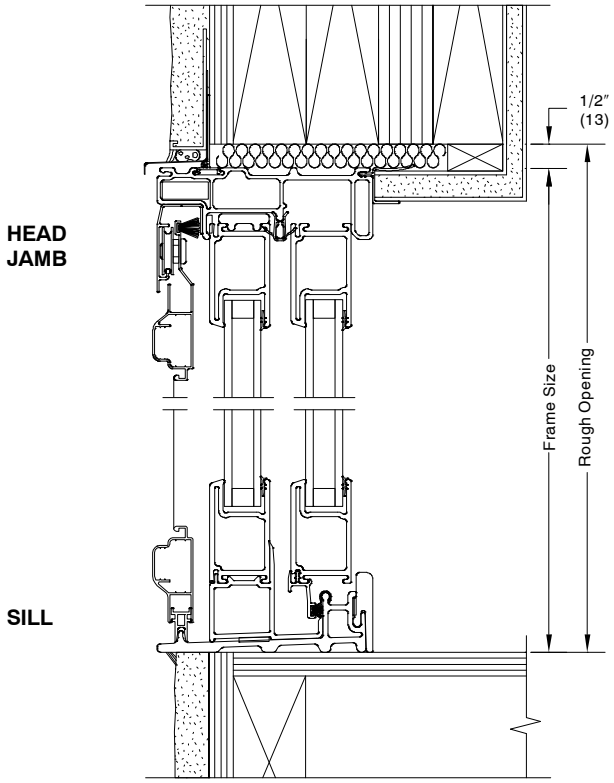

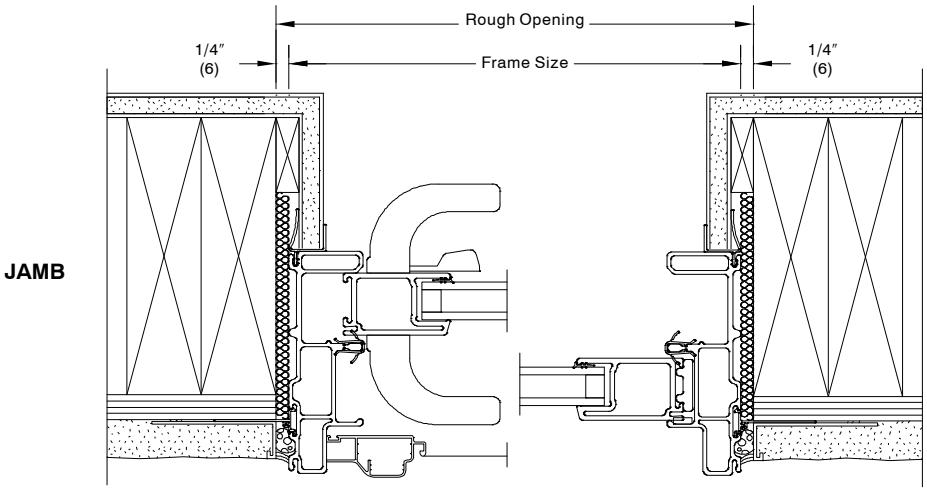

STUCCO WITH 2X4 FRAME CONSTRUCTION

NOTE:
The above wall sections represent typical wall conditions, these details are not intended as installation instructions. Please refer to the installation instructions provided with the purchased units.

ALL ULTREX SLIDING PATIO DOOR

INSTALLATION SUGGESTION Scale 3″ = 1′ 0″

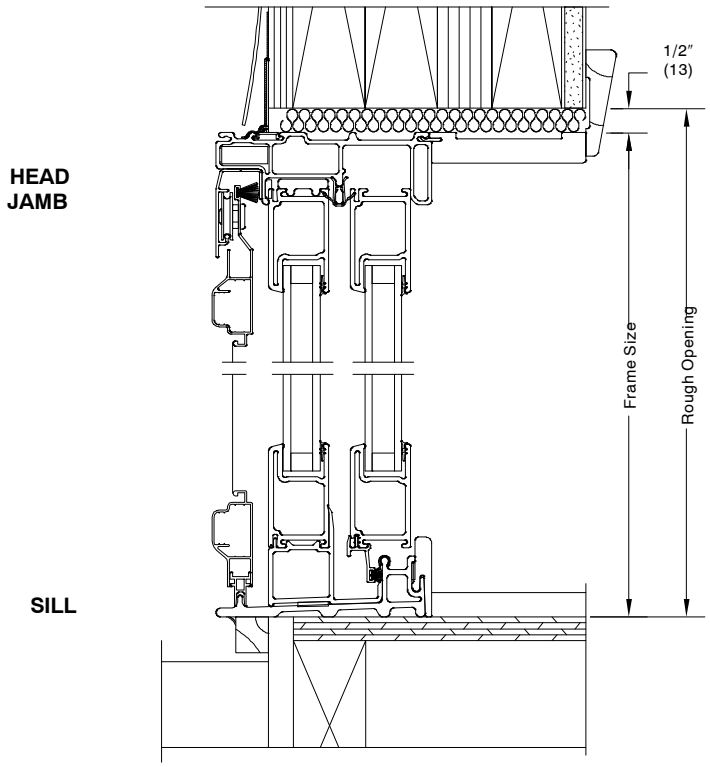

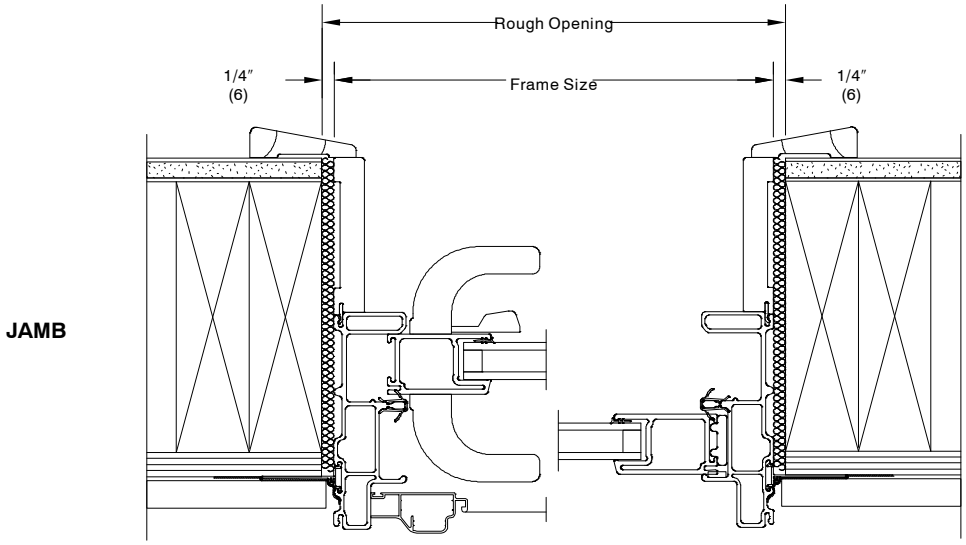

WOOD SIDING WITH 2X6 FRAME CONSTRUCTION

NOTE:
The above wall sections represent typical wall conditions, these details are not intended as installation instructions. Please refer to the installation instructions provided with the purchased units.

ALL ULTREX SLIDING PATIO DOOR

INSTALLATION SUGGESTION Scale 3″ = 1′ 0″

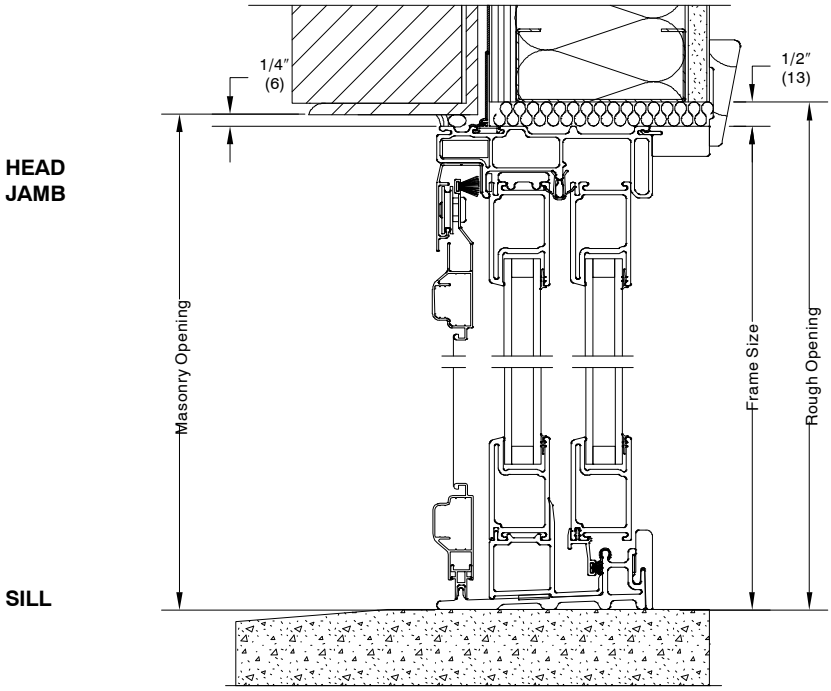

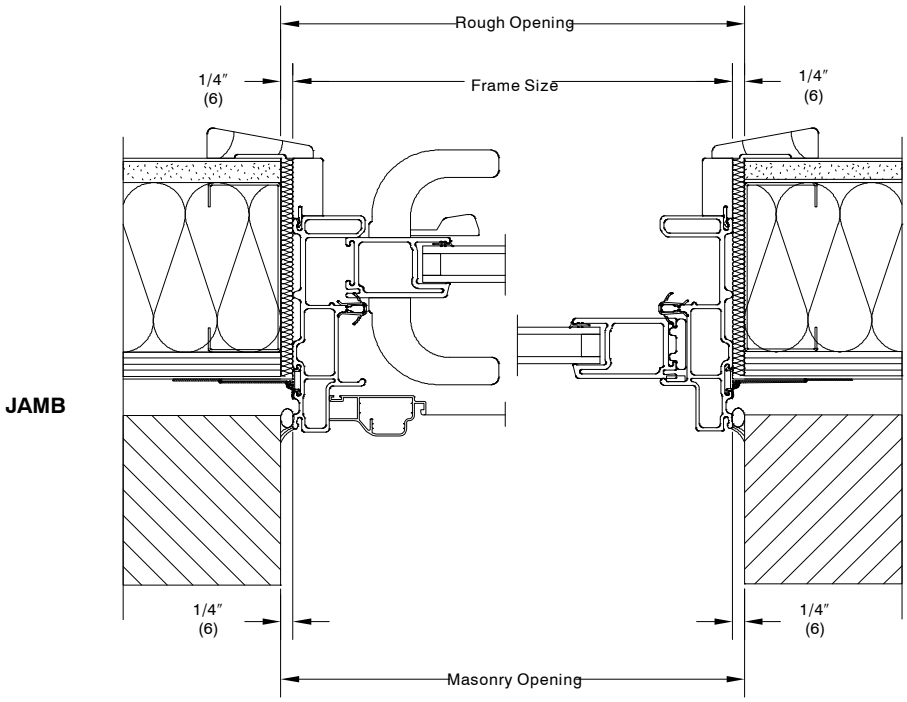

BRICK VENEER WITH STEEL FRAME CONSTRUCTION

NOTE:
The above wall sections represent typical wall conditions, these details are not intended as installation instructions. Please refer to the installation instructions provided with the purchased units.