Integrity All Ultrex Glider Screen Retrofit (IFGL)
Field Applied Instruction

ABSTRACT: These instructions are intended for retrofitting a screen in the field on an Integrity All Ultrex Glider.

NOTE: Numbers listed in parentheses ( ) are metric equivalents in millimeters rounded to the nearest whole number.

CAUTION

To avoid injury or death, do not lean out of window when performing retrofit.

You will need to supply	
Safety glasses	3/16" drill bit/drill

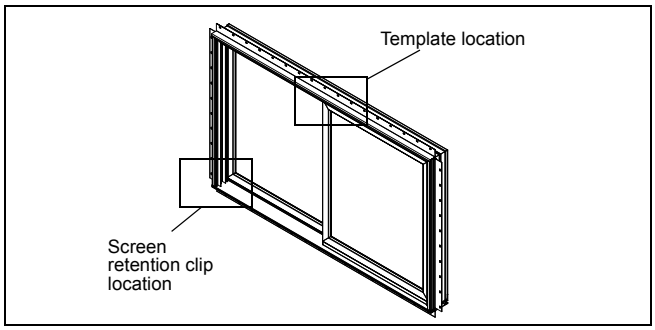

Installing Screen

1. Remove old screen.
2. Remove “S” shape screen retention clip on lower outside corner. See figure 1.

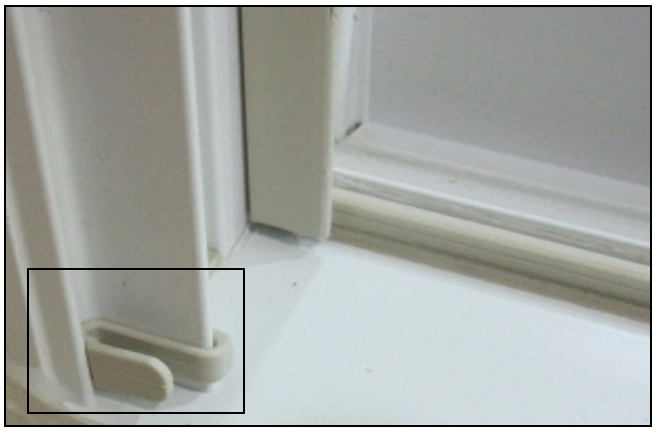

Figure 1

3. Place masking tape over stationary sash to prevent damage to sash. See figure 2.

Figure 2

4. Cut, fold and place template on frame. Secure with tape. Drill line should be 7/32" (6) from sash frame. See figure 3 and figure 4. (Template is on page 2.)

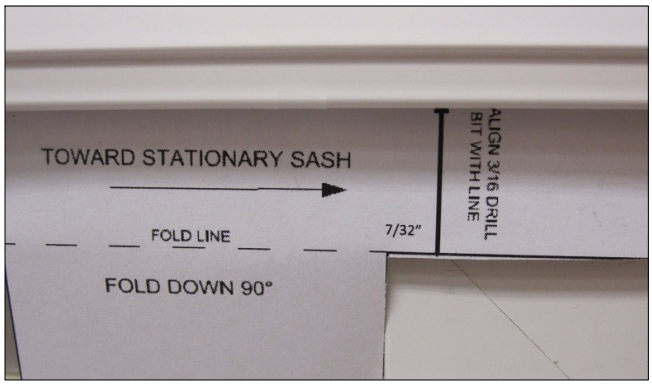

Figure 3

CAUTION

Drill through first frame wall only; do **not** drill through entire frame.

5. Using a drill with 3/16" (5) drill bit, carefully align drill bit with drill line on template and drill hole in groove of frame. See figure 4.

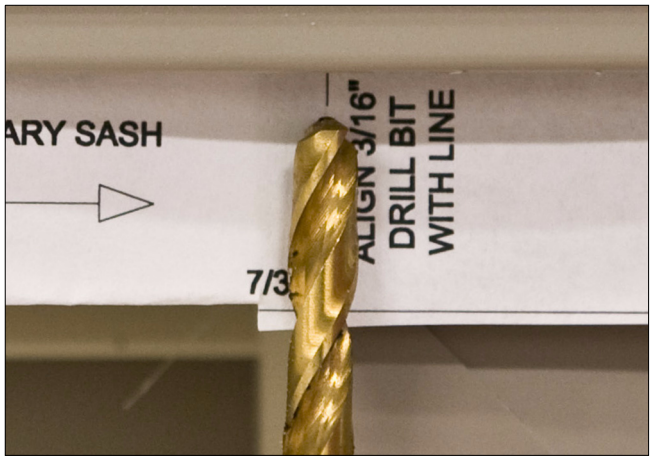

Figure 4

6. Install clip in frame. Indent on clip faces toward the exterior. Check that clip is secure. See figure 5.

Figure 5

7. Remove masking tape. Install new screen ensuring that screen corners are secure and both plungers are fully engaged.
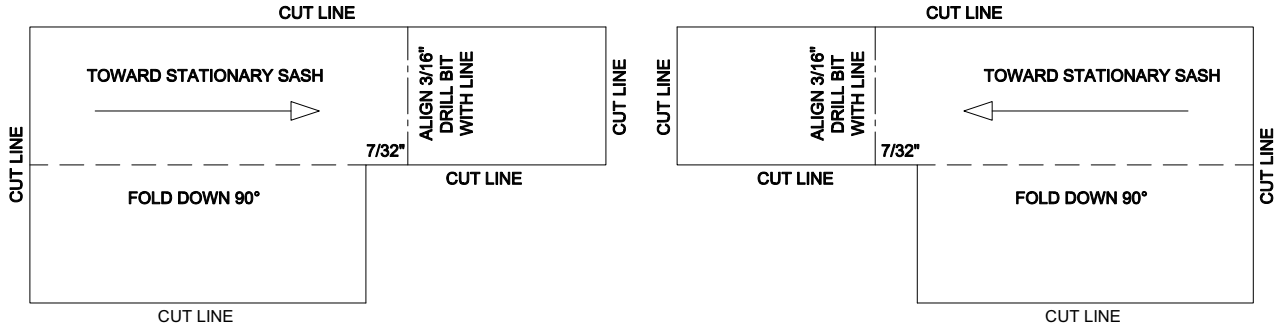
Template