CHAPTER 10

INTEGRITY WOOD–ULTREX SLIDING FRENCH DOOR

Unit Features 10.2
NFRC Values 10.3
Egress, Lite, and Vent Measurements. 10.5
Sizing Guidelines 10.6
Mulling Guidelines 10.7
Elevations 2 and 3 Panel Doors/Transom 10.8
Section Details – 4 9/16” Jambs – Standard Glazing 10.9
Section Details – 6 9/16” Jambs – Standard Glazing 10.10
Section Details – 4 9/16” Jambs – Impact Glazing 10.11
Section Details – 6 9/16” Jambs – Impact Glazing 10.13
Section Details – Transoms/Mullions 4 9/16” 10.14
Divided Lite Options 10.15
Available Divided Lite Patterns 10.16
Installation Suggestions 10.17

ATTENTION:

- Specifications and technical data are subject to change without notice.
- Allow 1/16″ (1.59 mm) tolerance on all measurements.
- Optional interior casing for round top units and interior mullion trim are shipped loose for field installation.
- For answers to technical questions about Integrity products you may call our Integrity Support Line: 1–800–587–2712.
- Website: www.integritywindows.com

SLIDING FRENCH DOOR

UNIT FEATURES

FRAME:
The frame exterior is made of Ultrex®, an advanced fiber reinforced material that is exceptionally resistant to thermal conductance. Ultrex patented coating system meets all the requirements of AAMA 623-10. Exterior coating shall meet AAMA 623–10 and 00022716 in stone white, pebble gray, bronze, evergreen, cashmere, and ebony. The interior is clear pine, kiln dried to a moisture content of 8–12% at time of fabrication. Sill is Ultrex with oak interior sill liner. Water repellent, preservative treated in accordance with WDMA I.S.4. Composite frame thickness is 1 1/16″ (27 mm). Frame width of 4 9/16″ (116 mm). 4/4 clear pine interior stop is applied to all units. Interior wood is available as Pine bare wood or factory applied white interior finish. Ultrex is .080″ (2 mm) thick.

PANEL:
The panel exterior is made of Ultrex, an advanced fiber reinforced material that is exceptionally resistant to thermal conductance. The interior is clear pine, kiln dried to a moisture content of 8–12% at time of fabrication. Water repellent, preservative treated in accordance with WDMA I.S.4. Interior wood is available as Pine bare wood or factory applied white interior. Composite sash thickness of 1 3/4″ (44 mm), stiles and top rails 3 5/8″ (92 mm), bottom rail width 6″ (152 mm). Ultrex is .110″ (3 mm) thick. Available in stone white, pebble gray, bronze, evergreen, cashmere or ebony colors. Two astragals are utilized on the impact unit. One on the interior operating panel and one on the exterior stationary panel. Both astragals are structural members of the panel providing stiffness for the meeting stiles.

JAMB EXTENSION:
6 9/16″ (167 mm) and 6 13/16″ (173 mm) jamb extension available factory applied or in lineal lengths for field application.

HARDWARE:
Multi–point lock with keyed cylinder. The lock assembly and keeper feature a two point opposing engagement providing tamper prevention. An anti–slam pin is standard to prevent locking when the door is open. Interior and exterior color/finish are the same. Standard finish is Almond Frost. Optional finish: White, Brass, Satin Nickel, and Oil Rubbed Bronze. Brass, Oil Rubbed Bronze, and Satin Nickel are lacquered. Optional Coastal Hardware is available on both non–Impact and Impact products. The Coastal Hardware option does not include handle sets. Coastal Grade finish is featured on handle sets with a PVD finish and is available in oil rubbed bronze, satin nickel, and brass.

INSTALLATION:
Factory applied folding nailing fin and drip cap system. Optional installation brackets for masonry available. Factory supplied field mulling kits are available for standard assemblies. Impact units require installation clips.

GLAZING:
All units are manufactured with a 3/4″ (19mm) IG with LoĒ^2–272®, LoĒ^3–366® and LoĒ–180™ coatings including argon gas fill. Tempered obscure is available as an option. All glass is of a select quality complying with ASTM C 1036. Insulating glass is manufactured and tested to pass level ASTM E 2190 and is IGCC certified. The glazing seal is a silicone bedding on both interior and exterior surfaces utilized in a sandwich style sash. STC/OITC values are available for 3.1/3.1 standard glass. Optional 3.1/4.7 STC/OITC Upgrade glass is available. STC and OITC ratings are tested in accordance with ASTM E 90-09. See the Product Performance chapter for values.

IMPACT GLAZING:
Optional Impact Zone 3 available on selected sizes. Zone 3 for winds up to 140 miles per hour. Glass is laminated insulated LoĒ^2 272® or LoĒ^3 366® with Argon, consisting of annealed or tempered glass exterior and laminated glass interior. The laminated glass is comprised of two pieces of glass with either a SGP or PVB laminate layer between. Interior and exterior glazing compound is silicone, in a sandwich style glazing system.

WEATHER STRIP:
All weather strip is beige color PVC standard. All units are constructed with weather strip at all panel perimeter joints. Jambs and head jamb utilize a leaf–type weather strip. A panel drip bulb weather strip seals between the bottom of the operator panel and the sill. The operator interlock uses full length leaf style weather strip, and the stationary interlock utilizes a bulb weather strip.

SCREEN:
Top–hung extruded aluminum screens are available as an option. Single operating screen only. Aluminum metal to match exterior Ultrex color. Charcoal color fiberglass (non–corrosive) screen material. Includes all mounting and latching hardware. Non–handed.

REMOVABLE INTERIOR GRILLES:
Bar: Pine wood, 3/4″ (19 mm) Pattern: Standard rectangular pattern. Available in Pine bare wood or factory applied white finish.

INTERIOR / EXTERIOR SIMULATED DIVIDED LITES (SDL):
Interior bar: 7/8″ (22 mm) wide bars. Pine bare wood or factory applied white finish, to match interior. Exterior bar: Ultrex, 7/8″ (22 mm) wide bars, finish to match exterior. Pattern: Standard rectangular pattern, 9–lite per panel Prairie cut, 6 lite Prairie cut on transom or Cottage style cut.

GRILLES–BETWEEN–THE–GLASS (GBG):
11/16″ (17 mm) contoured aluminum bar placed between two panes of glass. Pattern: Standard rectangular pattern, 9 lite per panel Prairie cut, or 6 lite Prairie cut on transom. Exterior color determined by frame color. White interior. GBGs are not available with Impact glazed units.

EXTERIOR CASING:
Non–integral to the unit. Fastened to the exterior wall with barb and kerf 2″ (51) brick mould available as a header and jamb surround. 3 1/2″ (89) flat casing available as a header and jamb surround. Also available with 1″ (25) ranch style header overhang.

This page left intentionally blank.
NFRC Values are now located on www.integritywindows.com.

This page left intentionally blank.
NFRC Values are now located on www.integritywindows.com.

SLIDING FRENCH DOOR

EGRESS, LITE, AND VENT MEASUREMENTS

EGRESS, LITE, AND VENT MEASUREMENTS								
	UNIT #	DAYLIGHT OPENING PER PANEL WIDTH	DAYLIGHT OPENING PER PANEL HEIGHT	LITE Sq. ft	VENT Sq. ft	EGRESS WIDTH	EGRESS HEIGHT	EGRESS Sq. ft
SLIDING FRENCH DOOR								
ISFD	5068	22 3/8″	69 19/32″	21.63	12.57	23.32	77.20	12.57
	6065	28 3/8″	67 3/32″	26.44	15.29	29.32	75.10	15.29
	6068	28 3/8″	69 19/32″	27.43	15.80	29.32	77.20	15.80
	6080	28 3/8″	83 3/32″	32.75	18.55	29.32	91.10	18.55
	8065	40 3/8″	67 3/32″	37.63	21.55	41.32	75.10	21.55
	8068	40 3/8″	69 19/32″	39.03	22.27	41.32	77.60	22.27
	8080	40 3/8″	83 3/32″	46.60	26.14	41.32	91.10	26.14
3 PANEL	9065	28 3/8″	67 3/32″	39.66	15.29	29.32	75.10	15.29
	9068	28 3/8″	69 19/32″	41.14	15.80	29.32	77.60	15.80
	9080	28 3/8″	83 3/32″	49.12	18.55	29.32	91.10	18.55
SLIDING FRENCH DOOR TRANSOM								
ISFDG	7216	66 5/8″	11 3/8″	5.26				
ISFDG	10726	102 1/8″	11 3/8″	5.26				
IMPACT SLIDING FRENCH DOOR								
ISFD	5068	22 3/8″	69 19/32″	21.63	12.57	22.35	77.20	11.98
	6065	28 3/8″	67 3/32″	26.44	15.29	28.35	74.70	14.70
	6068	28 3/8″	69 19/32″	27.43	15.80	28.35	77.20	15.20
	6080	28 3/8″	83 3/32″	32.75	18.55	28.35	90.70	17.85
	8065	40 3/8″	67 3/32″	37.63	21.55	40.35	74.70	20.93
	8068	40 3/8″	69 19/32″	39.03	22.27	40.35	77.20	21.63
	8080	40 3/8″	83 3/32″	46.60	26.14	40.35	90.70	25.41

EGRESS MEASUREMENTS

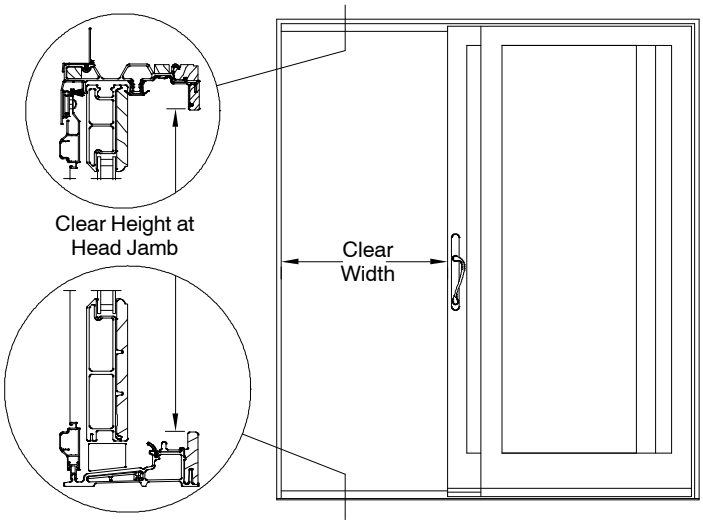

XO Sliding French Door Unit
Not to Scale

Code restrictions may vary depending on your local building codes.
For additional information contact your local code department for IBC and IRC requirements.

ROUGH OPENING TABLE FOR ASSEMBLIES

HEIGHT: Single unit Rough Opening height MINUS 1/2″ = Frame height.
ADD **all** frame heights PLUS 1/2″ = Total Rough Opening Height.

NOTE: Assemblies with 6 9/16″ or 6 13/16″ jamb extensions add 1/4″ to width and 1/8″ to height of Rough Opening.

MEASUREMENT CONVERSIONS				
ROUGH OPENING TO	**WIDTH**		**HEIGHT**	
SLIDING FRENCH DOOR 2 Panel	**Imperial**	**Metric**	**Imperial**	**Metric**
Masonry Opening	–1/2″	– 13 mm	– 1/4″	– 6 mm
OM of Frame	–1″	– 25 mm	– 1/2″	– 13 mm
OM of Panel	(÷ 2) – 3/8″	(÷ 2) – 10 mm	–3 9/32″	– 84 mm
Daylight Opening	(÷ 2) – 7 5/8″	(÷ 2) – 194 mm	– 12 29/32″	– 328 mm
OM of Glass	(÷ 2) – 6 7/16″	(÷ 2) – 164 mm	– 11 23/32″	– 298 mm
OM of Screen	(÷ 2) – 13/16″	(÷ 2) – 21 mm	– 2 1/4″	– 57 mm
OM of Impact Glass	(÷ 2) – 6 7/16″	(÷ 2) – 164 mm	– 11 25/32″	– 299 mm
SLIDING FRENCH DOOR 3 Panel				
Masonry Opening	– 1/2″	– 13 mm	– 1/4″	– 6 mm
OM of Frame	– 1″	– 25 mm	– 1/2″	– 13 mm
OM of Panel	(÷ 3) – 7/32″	(÷ 3) – 5 mm	– 3 9/32″	– 84 mm
Daylight Opening	(÷ 3) – 7 7/16″	(÷ 3) – 190 mm	– 12 29/32″	– 328 mm
OM of Glass	(÷ 3) – 6 9/32″	(÷ 3) – 159 mm	– 11 23/32″	– 298 mm
OM of Screen	(÷ 3) –21/32″	(÷ 3) – 16 mm	– 2 1/4″	– 57 mm
TRANSOM				
Masonry Opening	– 1/2″	– 13 mm	– 1/4″	– 6 mm
OM of Frame	– 1″	– 25 mm	– 1/2″	– 13 mm
Daylight Opening	– 5 3/8″	– 137 mm	– 4 7/8″	– 124 mm
OM of Glass	– 3 13/16″	– 97 mm	– 3 5/16″	– 84 mm
OM of Impact Glass	– 4″	– 102 mm	– 3 1/2″	– 89 mm

For Three Panel conversions, RO to Glass, Panels, and Screens, please contact Integrity Support (1–800–587–2712).

Factory Mulling

The Wood–Ultrex Sliding French Door may be mulled to Direct Glaze Polygon, and Integrity Round Tops.

- Standard mull limits (all factory mulls)
  - Maximum Mulled Assembly RO Size
    - 1 unit wide x 2 units high – 72″ (1829) x 100 1/2″ (2553)
- Field Mulling beyond 110″ (2794) 112″ (2845) is not recommended

Impact Certified Mull Limits: WDMA Hallmark certified to AAMA 450.

- If assemblies have individual units that have a lower design pressure than the mull; the entire assembly is rated at the lower design pressure.
- Mull certification includes 12″ mull brackets fastened at all mull joints
- Items not included in certified mulls: standard mull assemblies, Integrity Round Tops

1 Directional Mull Limits				
Product	**Max Span**	**Max TW or TH**	**Max R.O.**	**DP**
WU Door Transom Horizontal Mulling IZ3	71″ (1803)	50″ (1270)	72″ x 100 1/2″ (1829) x (2553)	+55/–55

- Standard Mulls are not certified
- Limited to 1H or 1W only
- Assembly DP is lowest DP of mull or any product
- Stepped Mulls are not certified
- Tributary Width or Tributary Height = 1/2A + 1/2B

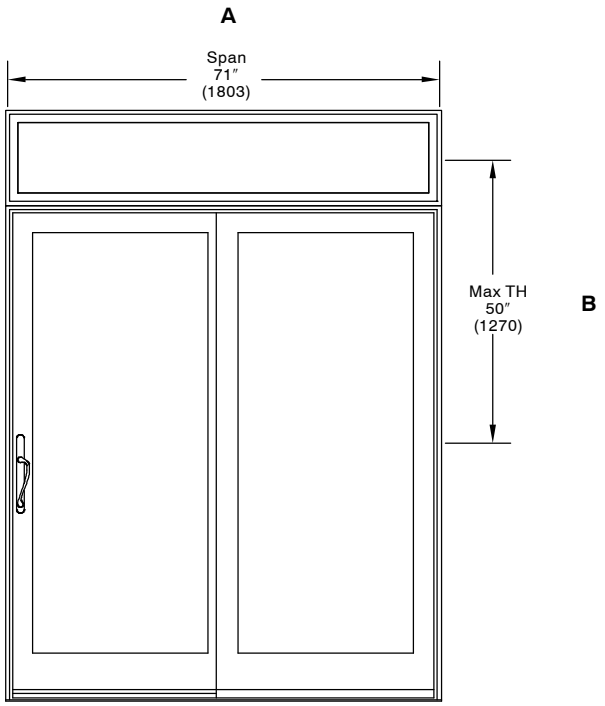

SLIDING FRENCH DOOR

ELEVATIONS 2 AND 3 PANEL DOORS / TRANSOMS Not To Scale

M.O.
R.O.
F.S.

6–7 3/4 (2026)
6–8 (2032)
6–7 1/2 (2019)

5–11 1/2 (1816)
6–0 (1829)
5–11 (1803)

ISFD 6065 XO

7–11 1/2 (2426)
8–0 (2438)
7–11 (2413)

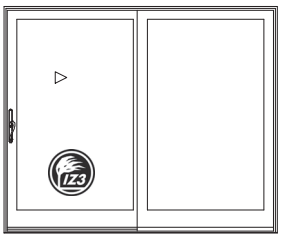

ISFD 8065 XO

8–11 (2718)
8–11 1/2 (2731)
8–10 1/2 (2705)

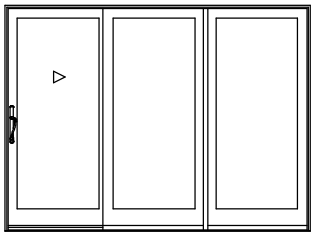

ISFD 9065 XOO

6–10 1/4 (2089)
6–10 1/2 (2096)
6–10 (2083)

4–11 1/2 (1511)
5–0 (1524)
4–11 (1499)

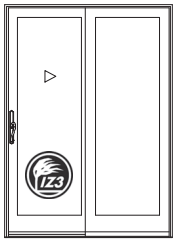

ISFD 5068 XO

5–11 1/2 (1816)
6–0 (1829)
5–11 (1803)

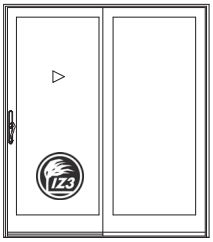

ISFD 6068 XO

7–11 1/2 (2426)
8–0 (2438)
7–11 (2413)

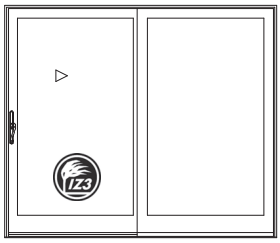

ISFD 8068 XO

8–11 (2718)
8–11 1/2 (2731)
8 10 1/2 (2705)

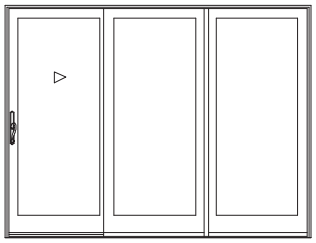

ISFD 9068 XOO

7–11 3/4 (2432)
8–0 (2438)
7–11 1/2 (2426)

5–11 1/2 (1816)
6–0 (1829)
5–11 (1803)

ISFD 6080 XO

7–11 1/2 (2426)
8–0 (2438)
7–11 (2413)

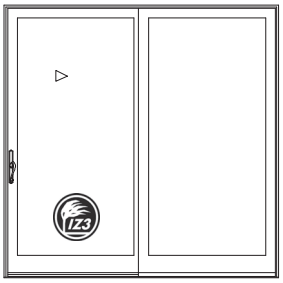

ISFD 8080 XO

8–11 (2718)
8–11 1/2 (2731)
8 10 1/2 (2705)

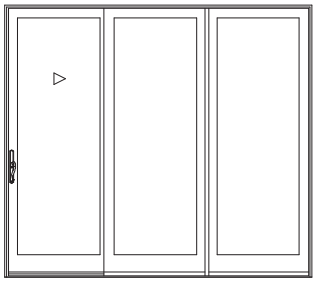

ISFD 9080 XOO

STANDARD TRANSOMS

(406)
(413)
(400)
1–4
1–4 1/4
1–3 3/4

5–11 1/2 (1816)
6–0 (1829)
5–11 (1803)

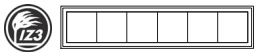

ISFDG 7216

8–11 (2718)
8–11 1/2 (2731)
8 10 1/2 (2705)

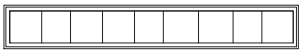

ISFDG 10716

NOTE:
One lite is standard, elevations are shown with rectangular lite pattern. Round top transoms available for field assembly, refer to round top chapter. Imperial and metric dimensions are shown metric dimensions are in millimeters. Equal lite cuts also available.

NOTE:
Transoms with SDL or GBG lites may be manufactured to align with pattern below in door. Lite cut of SDL or GBG will only align with lite cut of door it is intended for.

Represents units that are certified for Impact glazing with a wind zone 3.

OPERATION

2 Panel Units

XO

OX

3 Panel Units

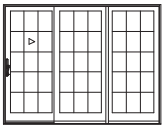

XOO

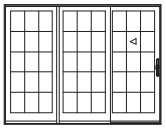

OOX

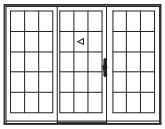

OXO – LH

Shown as a LH – also available as RH

O = Stationary Panel
X = Operating Panel

All units viewed from exterior.

SLIDING FRENCH DOOR

SECTION DETAILS – 4 9/16″ Jambs Scale 3″ = 1′ 0″

STANDARD GLAZING

HEAD JAMB

SILL

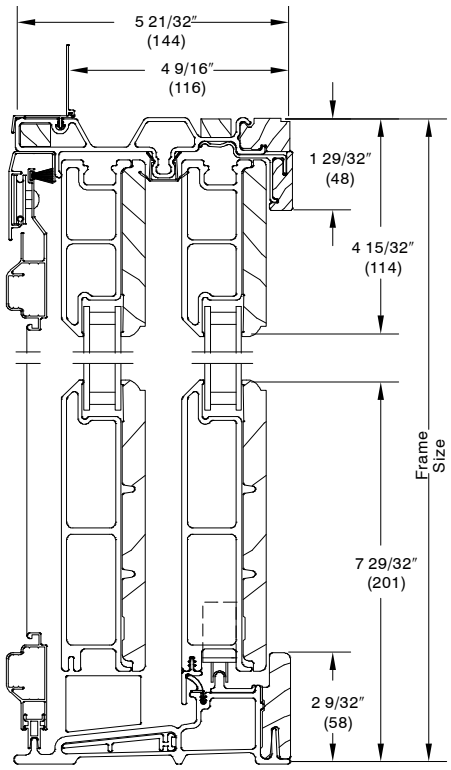

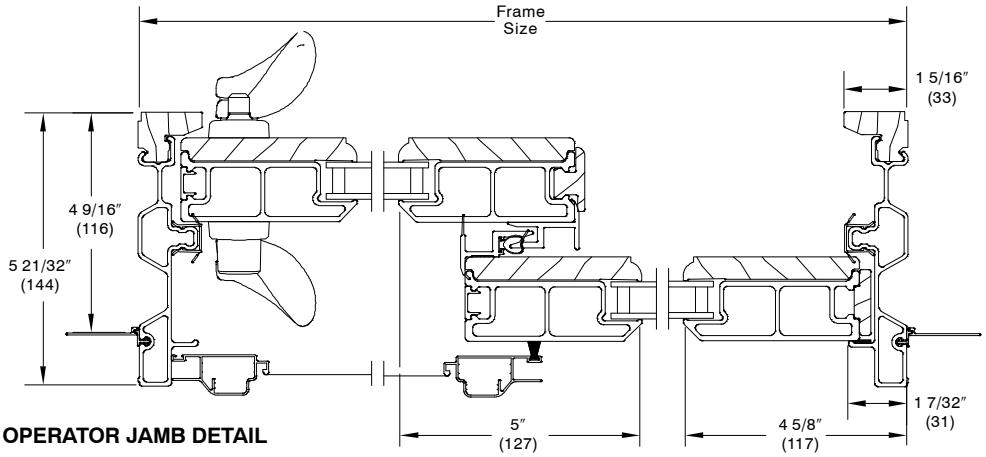

2 PANEL XO OPERATOR JAMB DETAIL

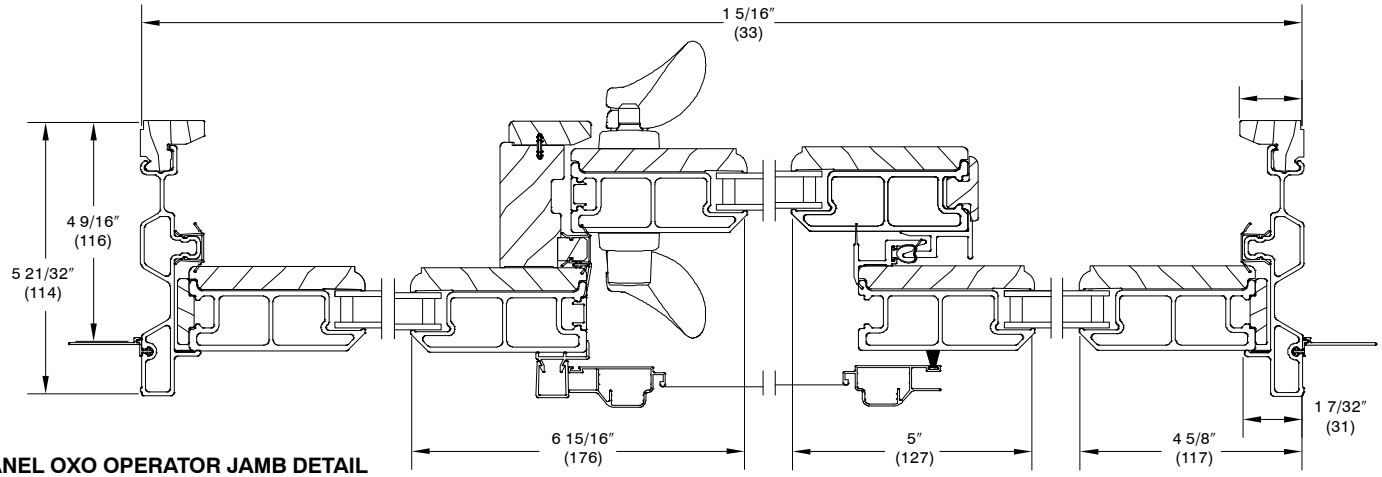

3 PANEL OXO OPERATOR JAMB DETAIL

SLIDING FRENCH DOOR

SECTION DETAILS – 6 9/16″ Jambs Scale 3″ = 1′ 0″

STANDARD GLAZING

HEAD JAMB

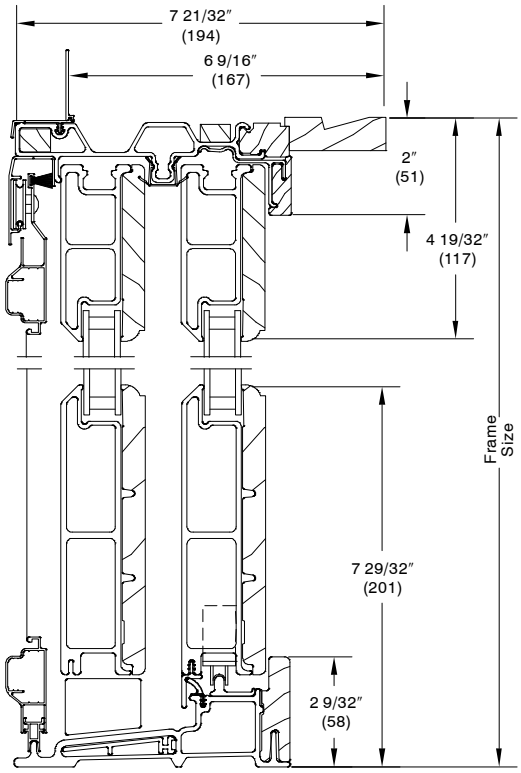

SILL

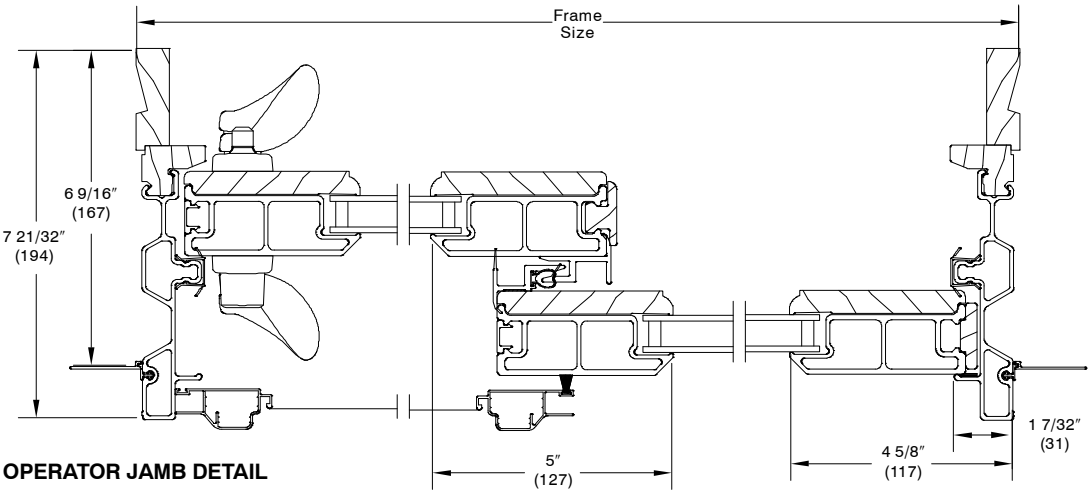

2 PANEL XO OPERATOR JAMB DETAIL

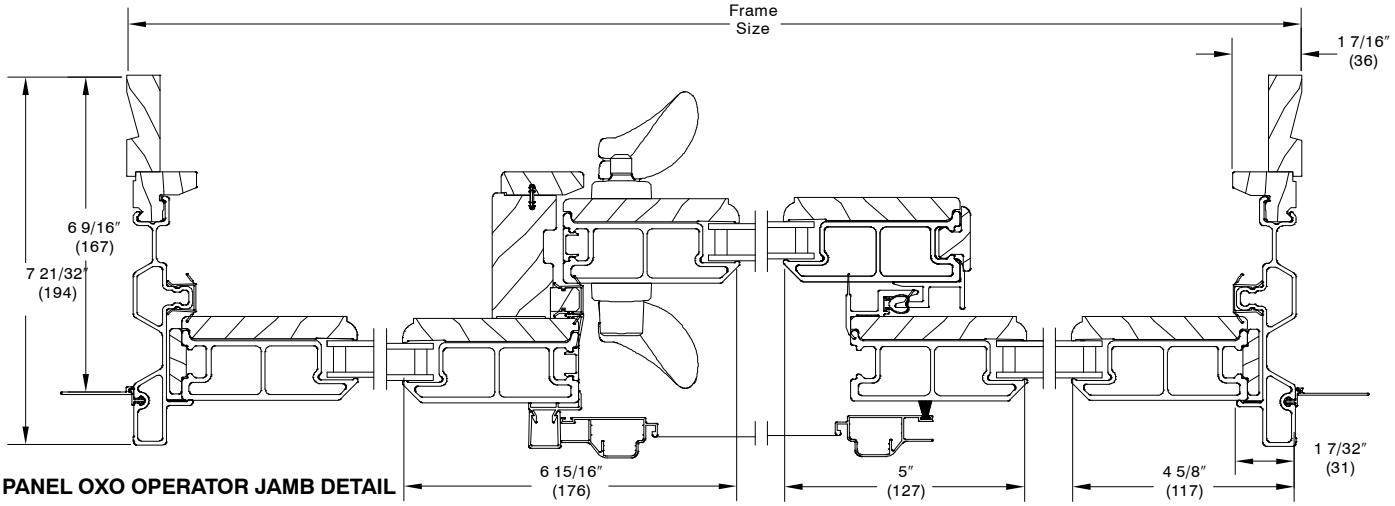

3 PANEL OXO OPERATOR JAMB DETAIL

SLIDING FRENCH DOOR

SECTION DETAILS – 4 9/16″ Jambs Scale 3″ = 1′ 0″

IMPACT GLAZING

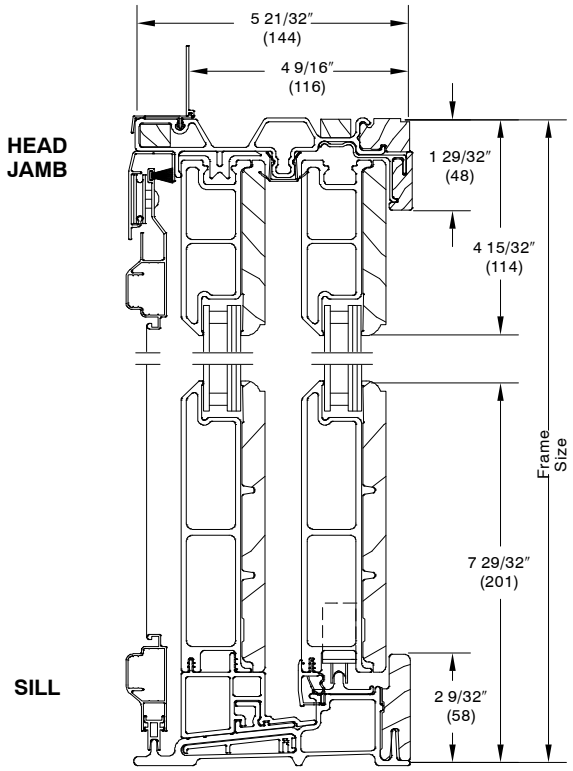

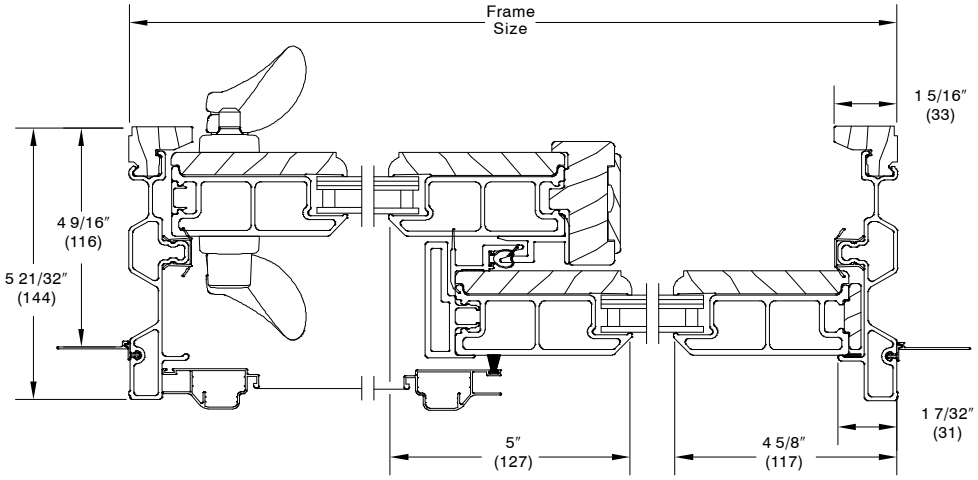

2 PANEL XO OPERATOR JAMB DETAIL

SLIDING FRENCH DOOR

SECTION DETAILS – 4 9/16″ Jambs Scale 3″ = 1′ 0″

DIRECT GLAZE DOORS
POLYGON STAND ALONE– 4 9/16” – Impact Glazing

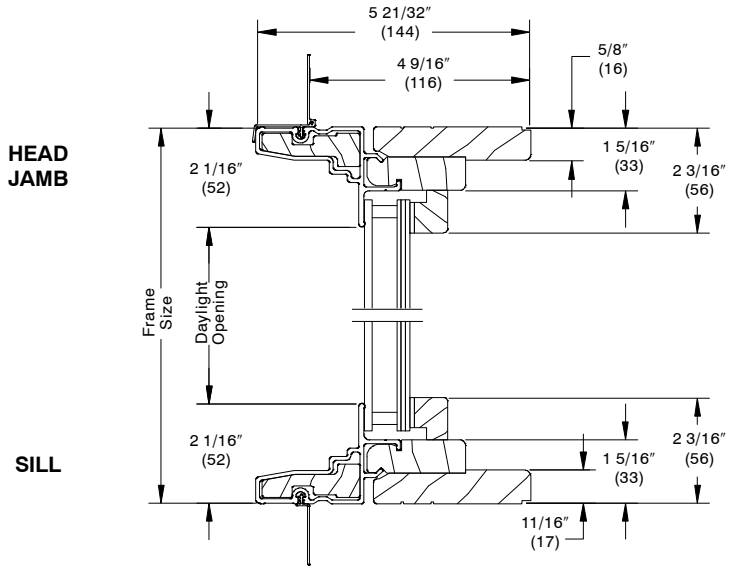

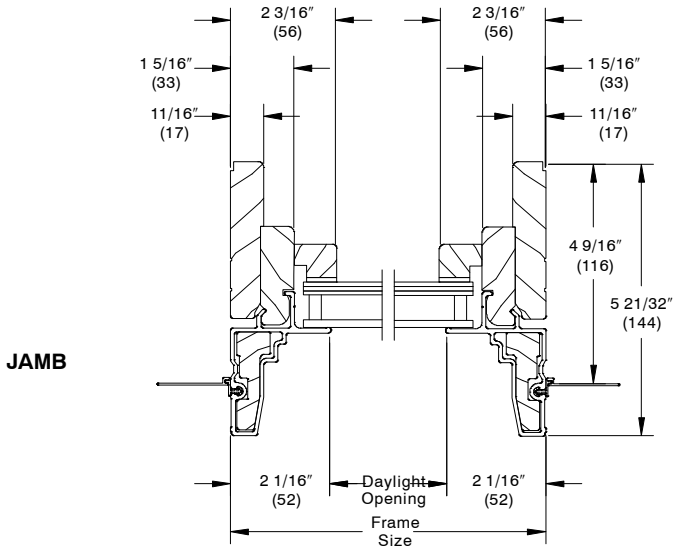

SLIDING FRENCH DOOR

SECTION DETAILS – 6 9/16″ Jambs Scale 3″ = 1′ 0″

IMPACT GLAZING

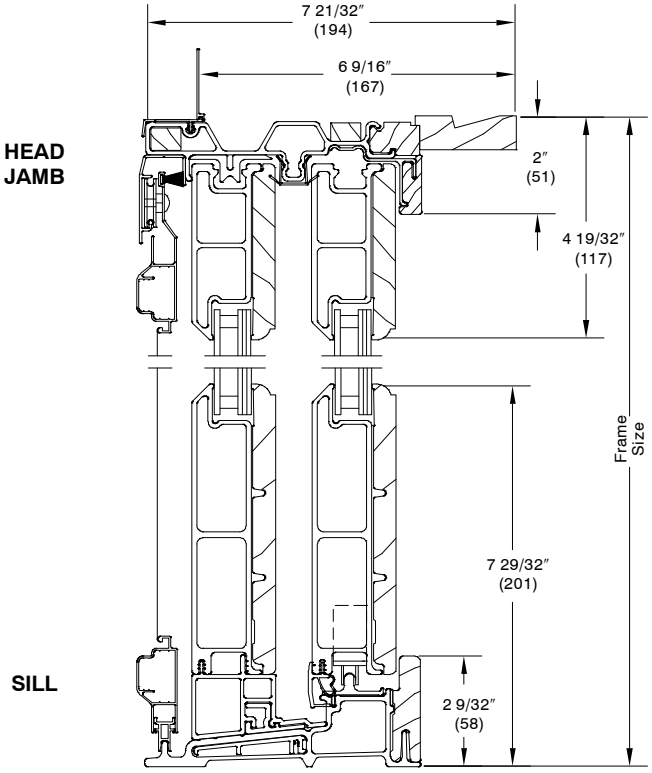

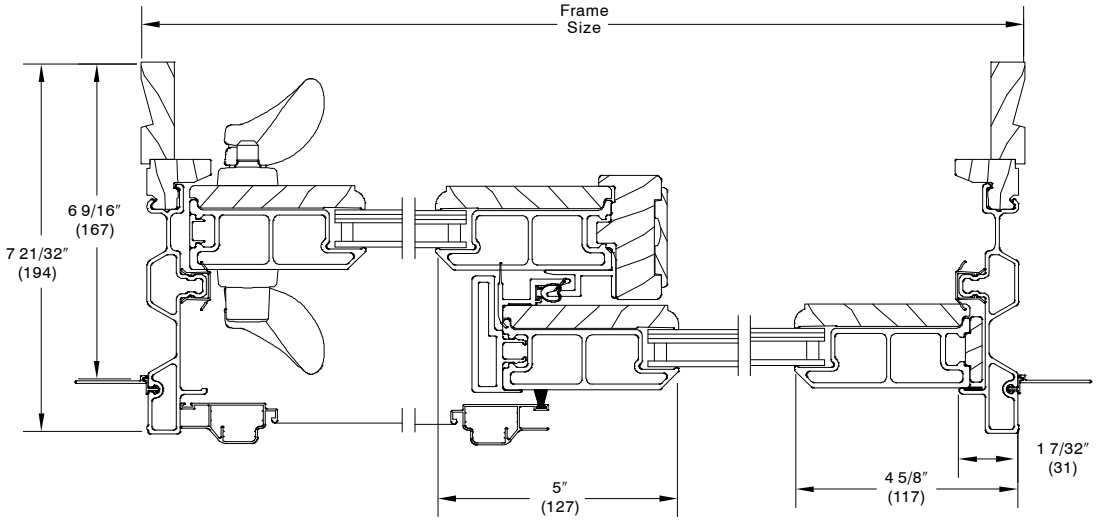

2 PANEL XO OPERATOR JAMB DETAIL

SLIDING FRENCH DOOR

SECTION DETAILS – DIRECT GLAZE TRANSOM AND MULLIONS

DIRECT GLAZE TRANSOM – 4 9/16″ Jambs

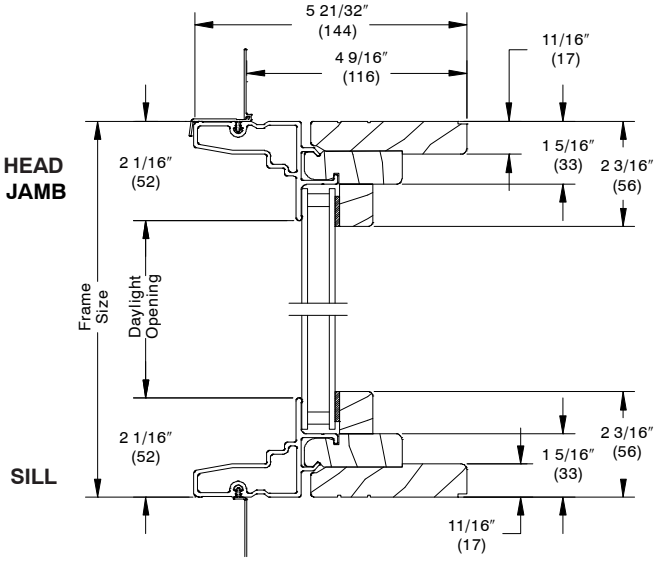

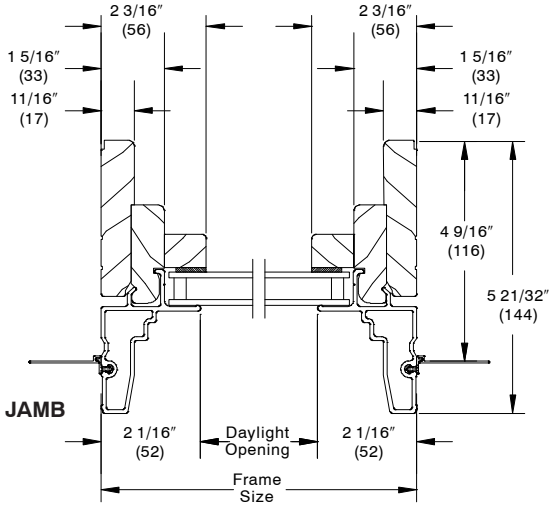

DIRECT GLAZE TRANSOM – 6 9/16″ Jambs

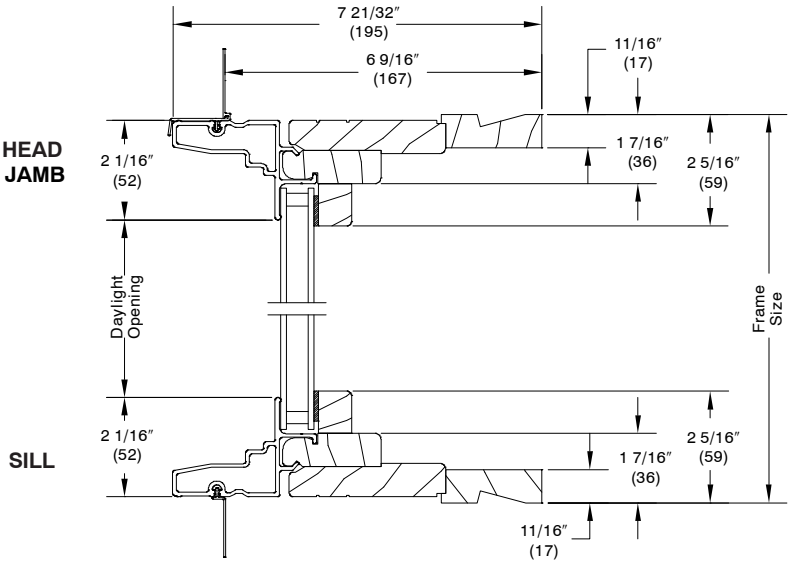

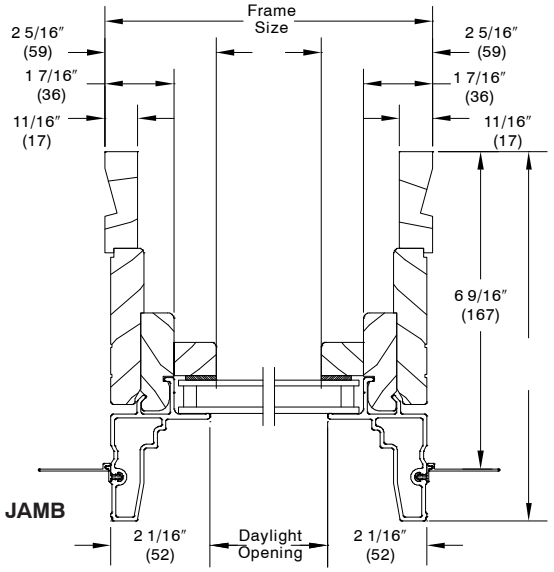

MULLIONS

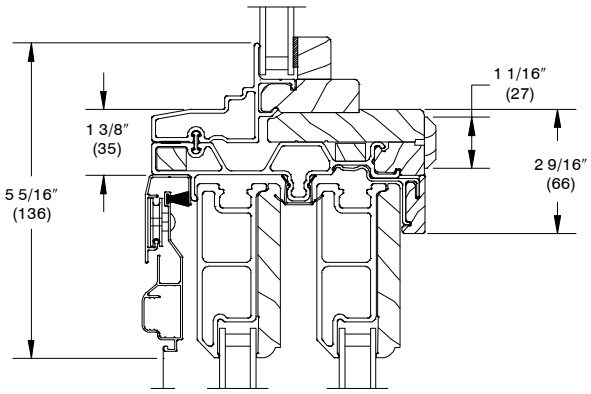

DIRECT GLAZE TRANSOM OVER SLIDING FRENCH DOOR

DIVIDED LITE OPTIONS

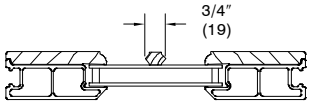

WOOD REMOVABLE GRILLE

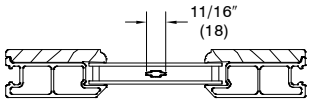

ALUMINUM GRILLE BETWEEN GLASS

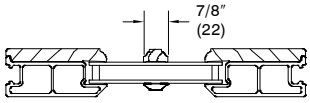

SIMULATED DIVIDED LITE

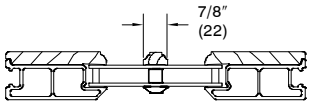

SIMULATED DIVIDED LITE WITH SPACER BAR

RECTANGLE SDL EXAMPLE SHOWN

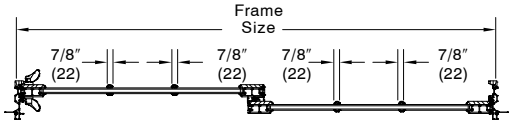

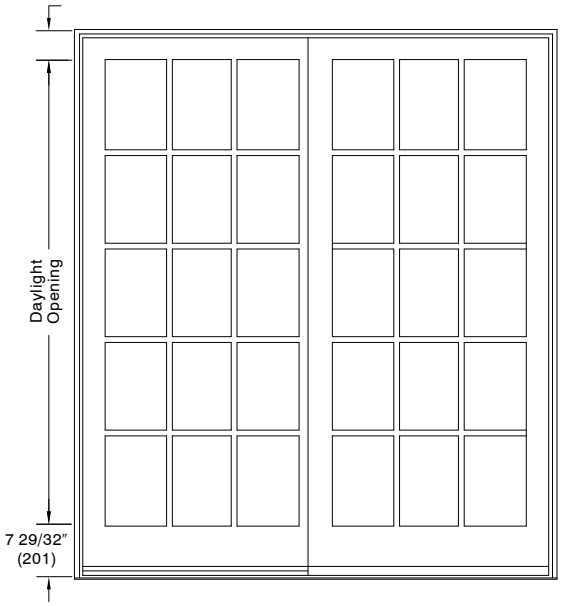

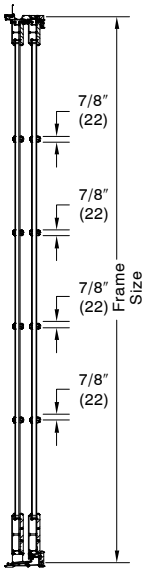

GBG or SDL (SDL SHOWN)

* 6 lite prairie lite cuts on ISFDG 7216 or ISFDG 10716 due to height limitations. GBGs not available in ISFDG 10716.

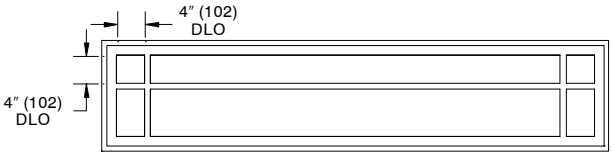

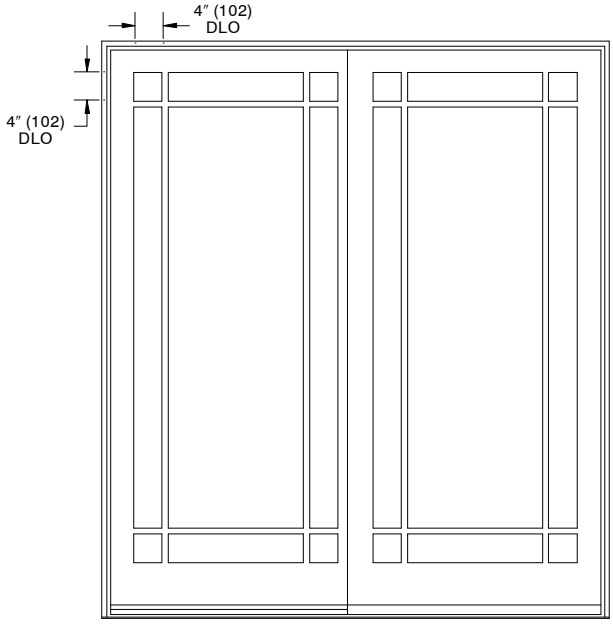

NOTE: * Optional 9 lite per panel Prairie cut GBG or SDL.

COTTAGE LITE CUT

* Horizontal bar is placed at 10″ (254) daylight opening.
* Only available in SDL.

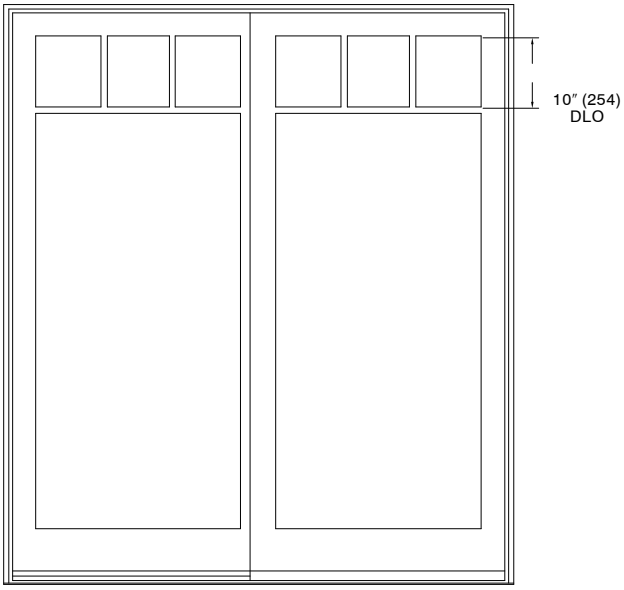

Conversion Formula per panel:

$$\frac{\text{Total DLO} - \text{Total bar width}}{\text{Number of lites}} = \text{Individual DLO}$$

NOTE: GBGs are not available on Impact IZ3 units.

NOTE: SDL with Spacer Bar are not available on Impact IZ3 units

SLIDING FRENCH DOOR

AVAILABLE DIVIDED LITE PATTERNS

CN	Rectangular			Prairie	
	Wood Grille	GBG or SDL		GBG	SDL
SLIDING FRENCH DOOR per panel					
6065	3W5H	3W5H	2W5H	9–Lite	9–Lite
8065	4W5H	4W5H	2W5H	9–Lite	9–Lite
9065	3W5H	3W5H	2W5H	9–Lite	9–Lite
5068	3W5H	3W5H	2W5H	9–Lite	9–Lite
6068	3W5H	3W5H	2W5H	9–Lite	9–Lite
8068	4W5H	4W5H	2W5H	9–Lite	9–Lite
9068	3W5H	3W5H	2W5H	9–Lite	9–Lite
6080	3W6H	3W6H	2W6H	9–Lite	9–Lite
8080	4W6H	4W6H	2W6H	9–Lite	9–Lite
9080	3W6H	3W6H	2W6H	9–Lite	9–Lite
DIRECT GLAZE TRANSOM per unit					
7216	6W1H	6W1H	4W1H	6–Lite Top	6–Lite Top
10716	9W1H	9W1H	6W1H	N/A	N/A

Cottage Lite Cuts			
CN Width	Product	Lite Cut Wide (per panel)	Total Lites per Unit
50	Sliding French Door	4	8
60	Sliding French Door	4	8
80	Sliding French Door	5	10
90	Sliding French Door	4	12

Notes:

- Direct Glaze Transoms with GBGs or SDL will only align with the cut of the door it is intended to be mulled with and may not have equally spaced lites unless otherwise indicated. For alternative GBG or SDL lite alignment, order a Direct Glaze Rectangle with the divided lite option.
- An ISFDDG 7216 with GBGs or SDL will align over an ISFD CN60 width only.
- An ISFDDG 10716 is available field–mulled or stand–alone only. Rectangular GBGs or SDL in a field–mulled ISFDDG 10716 will align over an ISFD 9068 OR 9080 only. Rectangular GBGs or SDL in a stand–alone ISFDDG 10716 will be equally spaced.
- GBGs are not available on Impact products.

SLIDING FRENCH DOOR

INSTALLATION SUGGESTION Scale 3″ = 1′ 0″

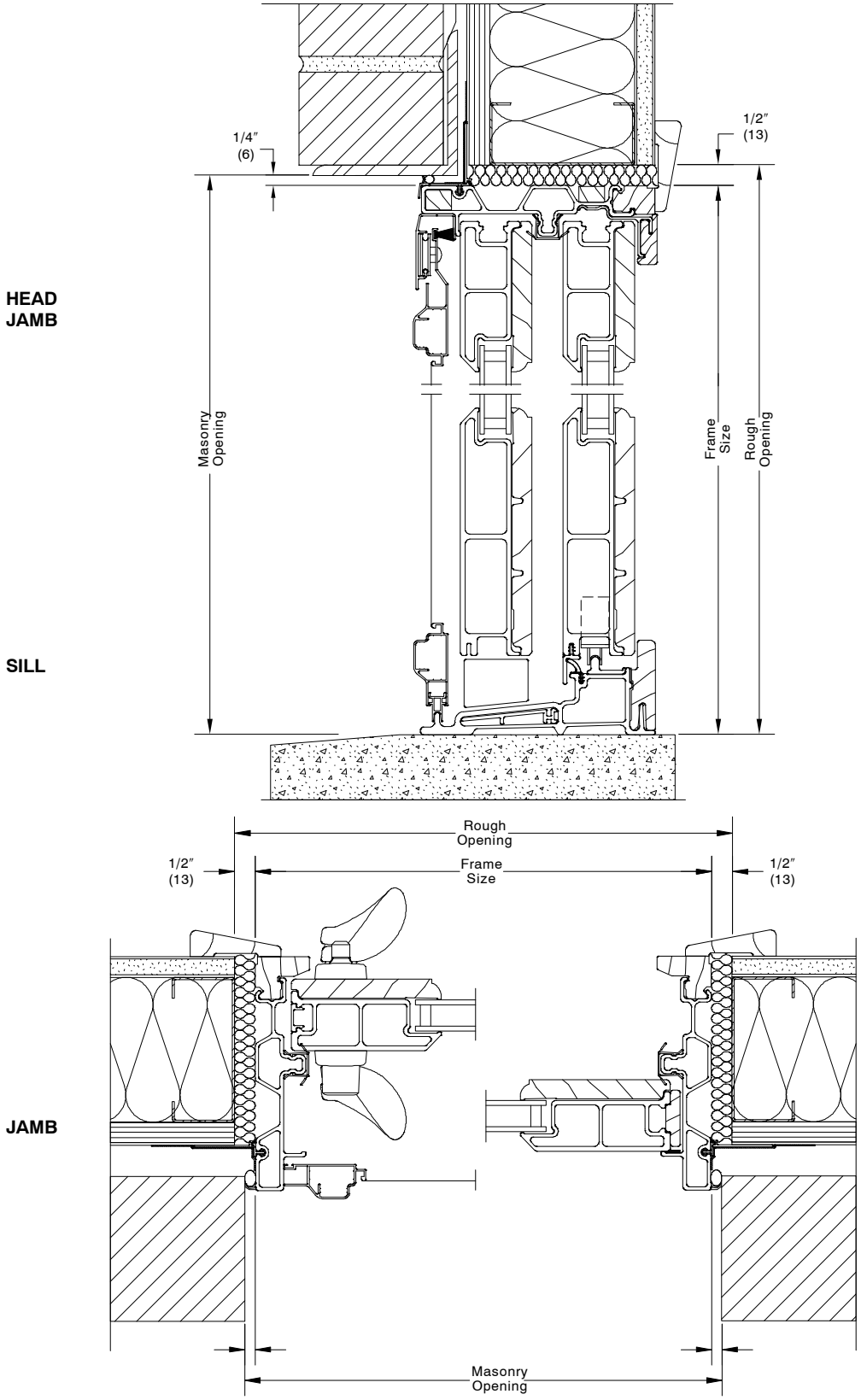

BRICK VENEER WITH STEEL FRAME CONSTRUCTION

NOTE:
The above wall sections represent typical wall conditions, these details are not intended as installation instructions. Please refer to the installation instructions provided with the purchased units.

SLIDING FRENCH DOOR

INSTALLATION SUGGESTION Scale 3″ = 1′ 0″

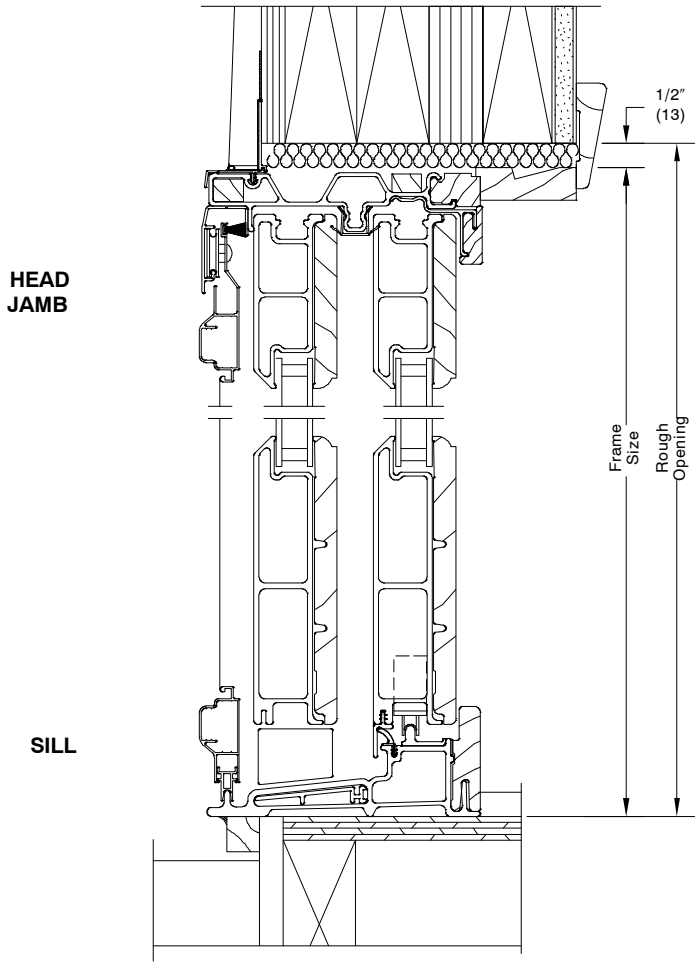

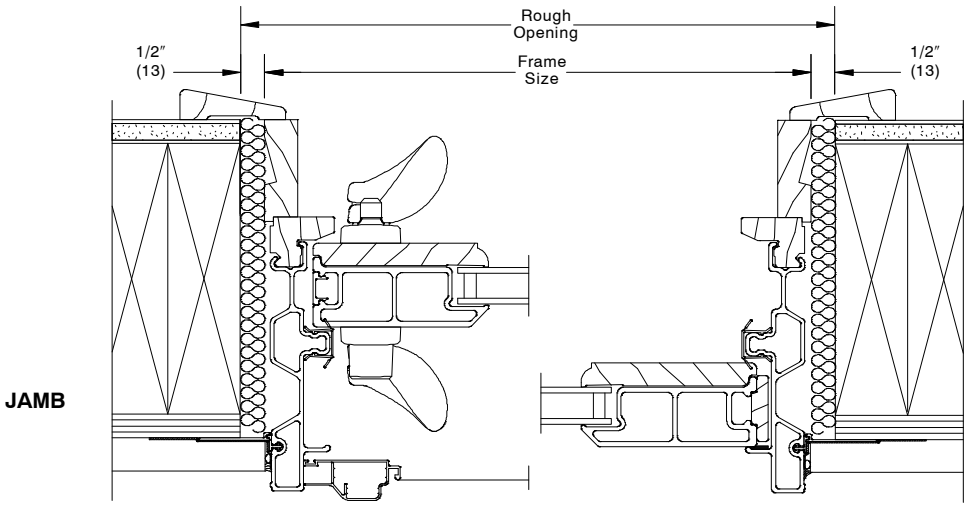

WOOD SIDING WITH 2X6 FRAME CONSTRUCTION

NOTE:
The above wall sections represent typical wall conditions, these details are not intended as installation instructions. Please refer to the installation instructions provided with the purchased units.

SLIDING FRENCH DOOR

INSTALLATION SUGGESTION Scale 3″ = 1′ 0″

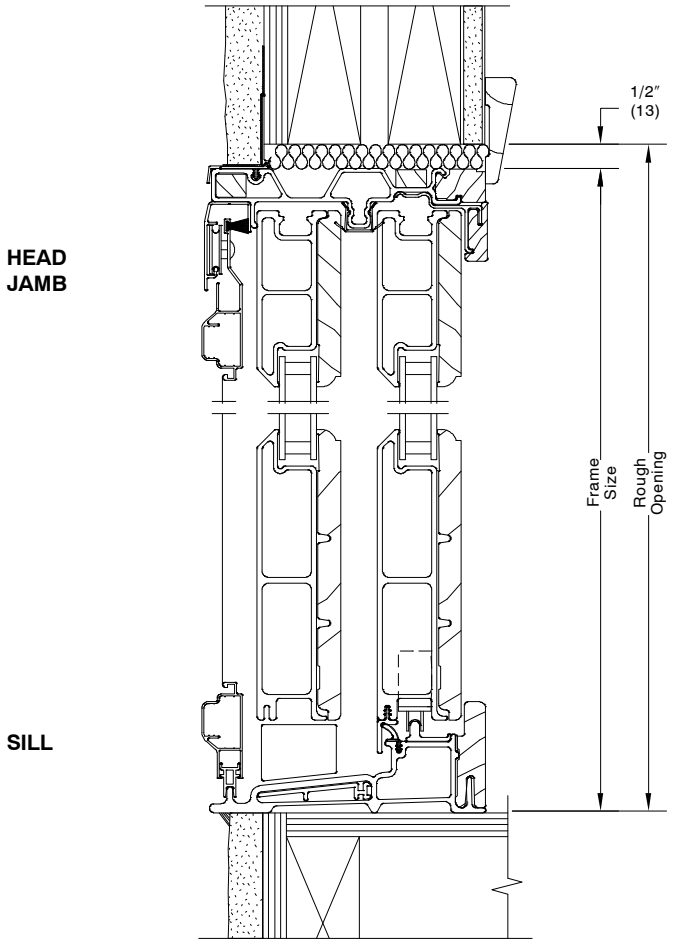

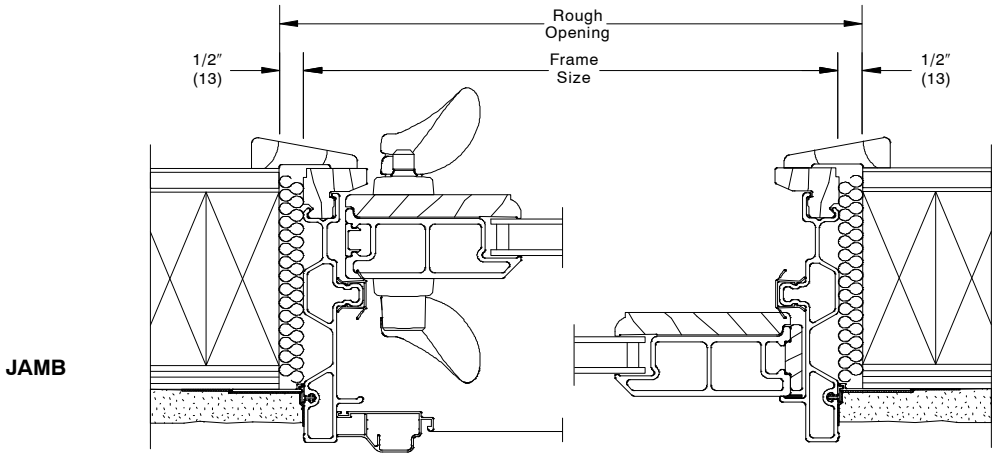

STUCCO WITH 2X4 FRAME CONSTRUCTION

NOTE:
The above wall sections represent typical wall conditions, these details are not intended as installation instructions. Please refer to the installation instructions provided with the purchased units.