CHAPTER 11A

INTEGRITY ALL ULTREX DOUBLE HUNG

Unit Features 11A.2
Certified Sizes and Ratings 11A.3
Egress, Lite, and Vent Measurements 11A.5
Egress Calculations / Minimum and Maximum Guidelines 11A.13
Sizing Guidelines / Measurement Conversions 11A.14
Elevations – Double Hung Units and Transoms 11A.15
Elevations – Picture 11A.17
Section Details – Operating 11A.18
Section Details – Transom / Picture 11A.19
Section Details – Mullions 11A.20
Divided Lite Options 11A.21
Installation Suggestions 11A.22

ATTENTION:

- Specifications and technical data are subject to change without notice.
- Allow 1/16″ (1.59 mm) tolerance on all measurements.
- For answers to technical questions about Integrity products you may call our Integrity Support Line: 1–800–587–2712.
- Website: www.integritywindows.com

ALL ULTREX DOUBLE HUNG

UNIT FEATURES

FRAME:
The frame is made of Ultrex®, an advanced fiber reinforced material that is exceptionally resistant to thermal conductance. Ultrex patented coating system meets all the requirements of AAMA 623-10. Exterior coating shall meet AAMA 623–10 and 00022716 in stone white, pebble gray, bronze, evergreen, cashmere and ebony. Interior color coatings shall meet 00022716 in stone white. Composite frame thickness is 1 3/8″ (35mm). Frame width of 3 3/32″ (79 mm). Flat bottom sill with 11 degree bevel. Ultrex is .065″ – .070″ (2mm) thick.

SASH:
The sash is made of Ultrex®, an advanced fiber reinforced material that is exceptionally resistant to thermal conductance. Composite sash thickness of 15/16″ (24mm). Ultrex is .065″ – .070″ (2mm) thick. Color: stone white, pebble gray, bronze, evergreen, cashmere or ebony exterior, and stone white interior. Sashes can be replaced but not reglazed. Cottage style unit: sash divided 2/5 over 3/5. Oriel style unit: sash divided 3/5 over 2/5.

JAMB EXTENSION:
2″ (51 mm) is standard. 4 9/16″ (116 mm) and 6 9/16″ (167 mm) maintenance free jamb extension available.

HARDWARE:
The balance system is a coil spring block and tackle system, with clutches and sash pins that interlock when sash is in operating position without removing the screen. High pressure zinc die cast checkrail lock and keeper. Lock employs a cam–lock mechanism. Two locks on a rough opening over 30″ (762 mm) wide. Color: stone white. Optional almond frost, brass, satin nickel and oil rubbed bronze hardware finishes. Lock, keeper and fasteners will be available in each of the additional hardware finish options. Tilt latches and sash pull will remain white, regardless of which hardware finish is selected. Sash employs tilt latches to allow for easy tilting and removal of sash. Bottom sash lift, color: stone white. Top sash pull, color: stone white. Optional vent stop, a sash travel limiting and venting device. Also available are optional sash limiter kits and non–operable lock component kits.

INSTALLATION:
Factory applied folding nailing fin. Optional through jamb installation method with brackets. Factory supplied field mulling kits are available for standard assemblies.

GLAZING:
All units are manufactured with a 11/16″ (17mm) IG with LoĒ^2–272®, LoĒ^3–366® or LoĒ–180™ coatings including argon gas fill. Tempered glass and/or obscure glass are available as an option. All glass is of a select quality complying with ASTM C 1036. Insulating glass is manufactured and tested to pass level ASTM E 2190 and is IGCC certified. The glazing seal is a silicone bedding on both interior and exterior surfaces utilized in a sandwich style sash. STC/OITC values are available for 3.1/3.1 standard glass. Optional 3.1/4.7 STC/OITC Upgrade glass is available. STC and OITC ratings are tested in accordance with ASTM E 90-09. See the Product Performance chapter for values.

WEATHER–STRIP:
Sill weather–strip is foam filled vinyl bulb. Bottom sash seal/ weather strip: foam filled vinyl bulb. Top sash seal/ weather strip: Hollow vinyl bulb; operating top sash. The check rails are sealed using rigid vinyl with flexible seals.

INSECT SCREEN:
Charcoal color fiberglass (non–corrosive) screen cloth. Rolled formed aluminum frame finish to match the exterior Ultrex color. Full screen is standard, half screen option is available.

GRILLES–BETWEEN–THE–GLASS:
Grilles–Between–the–Glass (GBGs) are manufactured from aluminum in an 11/16″ (17 mm) wide contoured profile placed between the two panes of glass. Color: stone white, pebble gray, bronze, evergreen, cashmere or ebony exterior and stone white interior. Pattern: Standard rectangular pattern, or optional 6 lite per sash Prairie cut on Double Hung or 9 lite on picture units within size limitations.

ACCESSORIES:
Field applied: J–channel, a 1”(25) or 3”(76) frame expander, Flush Fin installation kit. Factory applied: sheet rock return for 1/2”(13) or 5/8”(16) drywall, a 3/4”(19) receiver, a frame filler or a flush fin. General Mull kits are available for field assembly.

EXTERIOR CASING:
Non–integral to the unit. Fastened to the exterior wall with barb and kerf 2” brick mould as a full surround or with sill nosing. 3 ½” flat casing available as full surround or with sill nosing. Also available with 1” ranch style sill and header overhang.

NOTE: *NFRC Values are now located on www.integritywindows.com

ALL ULTREX DOUBLE HUNG

Certified Sizes and Rating

Integrity All Ultrex Double Hung								
Standard Sizes and WDMA Ratings of Standard Operable Units								
Nominal Height	Frame Height, inches	Nominal Width						
		Frame Width, inches						
		16	20	26	28	30	36	40
		17.5	23.5	29.5	31.5	35.5	41.5	47.5
20	23.5	H–LC50	H–LC50	H–LC50	H–LC50	H–LC50	H–LC50	H–LC50
26	29.5	H–LC50	H–LC50	H–LC50	H–LC50	H–LC50	H–LC50	H–LC50
30	35.5	H–LC50	H–LC50	H–LC50	H–LC50	H–LC50	H–LC50	H–LC50
36	41.5	H–LC50	H–LC50	H–LC50	H–LC50	H–LC50	H–LC50	H–LC50
40	47.5	H–LC50	H–LC50	H–LC50	H–LC50	H–LC50	H–LC50	H–LC50
46	53.5	H–LC50	H–LC50	H–LC50	H–LC50	H–LC50	H–LC40	H–LC40
50	59.5	H–LC50	H–LC50	H–LC50	H–LC50	H–LC50	H–LC40	H–LC40
56	65.5	H–LC40	H–LC40	H–LC40	H–LC40	H–LC40	H–LC40	H–LC30
60	71.5	H–LC40	H–LC40	H–LC40	H–LC40	H–LC40	H–LC30	H–LC30
66	77.5	H–LC40	H–LC40	H–LC40	H–LC40	H–LC40	H–LC30	H–LC30

Integrity All Ultrex Cottage/Reverse Cottage Double Hung								
Standard Sizes and WDMA Ratings of Standard Operable Units								
Nominal Height	Frame Height, inches	Nominal Width						
		Frame Width, inches						
		16	20	26	28	30	36	40
		17.5	23.5	29.5	31.5	35.5	41.5	47.5
26	29.5	H–LC50	H–LC50	H–LC50	H–LC50	H–LC50	H–LC50	H–LC50
30	35.5	H–LC50	H–LC50	H–LC50	H–LC50	H–LC50	H–LC50	H–LC50
36	41.5	H–LC50	H–LC50	H–LC50	H–LC50	H–LC50	H–LC40	H–LC40
40	47.5	H–LC50	H–LC50	H–LC50	H–LC50	H–LC50	H–LC40	H–LC40
46	53.5	H–LC40	H–LC40	H–LC40	H–LC40	H–LC40	H–LC40	H–LC30
50	59.5	H–LC40	H–LC40	H–LC40	H–LC40	H–LC40	H–LC30	H–LC30
56	65.5	H–LC40	H–LC40	H–LC40	H–LC40	H–LC40	H–LC30	H–LC30

ALL ULTREX DOUBLE HUNG

Certified Sizes and Rating

Integrity All Ultrex Sliding Window Picture									
Standard Sizes and WDMA Ratings of Standard Operable Units									
Nominal Height	Frame Height, inches	Nominal Width							
		Frame Width, inches							
		16	20	26	28	30	36	40	50
		17.5	23.5	29.5	31.5	35.5	41.5	47.5	59.5
20	23.5	F–LC50	F–LC50	F–LC50	F–LC50	F–LC50	F–LC50	F–LC50	F–LC50
26	29.5	F–LC50	F–LC50	F–LC50	F–LC50	F–LC50	F–LC50	F–LC50	F–LC50
30	35.5	F–LC50	F–LC50	F–LC50	F–LC50	F–LC50	F–LC50	F–LC50	F–LC50
36	41.5	F–LC50	F–LC50	F–LC50	F–LC50	F–LC50	F–LC50	F–LC50	F–LC50
40	47.5	F–LC50	F–LC50	F–LC50	F–LC50	F–LC50	F–LC50	F–LC50	F–LC50
46	53.5	F–LC50	F–LC50	F–LC50	F–LC50	F–LC50	F–LC50	F–LC50	F–LC50
50	59.5	F–LC50	F–LC50	F–LC50	F–LC50	F–LC50	F–LC50	F–LC50	F–LC50
56	65.5	F–LC50	F–LC50	F–LC50	F–LC50	F–LC50	F–LC50	F–LC50	F–LC50
60	71.5	F–LC50	F–LC50	F–LC50	F–LC50	F–LC50	F–LC50	F–LC50	F–LC50
66	77.5	F–LC50	F–LC50	F–LC50	F–LC50	F–LC50	F–LC50	F–LC50	F–LC50

Integrity All Ultrex Sliding Window Transom									
Standard Sizes and WDMA Ratings									
Nominal Height	Frame Height, in	Nominal Width							
		Frame Width, inches							
		16	20	26	28	30	36	40	50
		17.5	23.5	29.5	31.5	35.5	41.5	47.5	59.5
10	11.5	F–LC50	F–LC50	F–LC50	F–LC50	F–LC50	F–LC50	F–LC50	F–LC50
16	17.5	F–LC50	F–LC50	F–LC50	F–LC50	F–LC50	F–LC50	F–LC50	F–LC50
20	23.5	F–LC50	F–LC50	F–LC50	F–LC50	F–LC50	F–LC50	F–LC50	F–LC50

EGRESS MEASUREMENTS

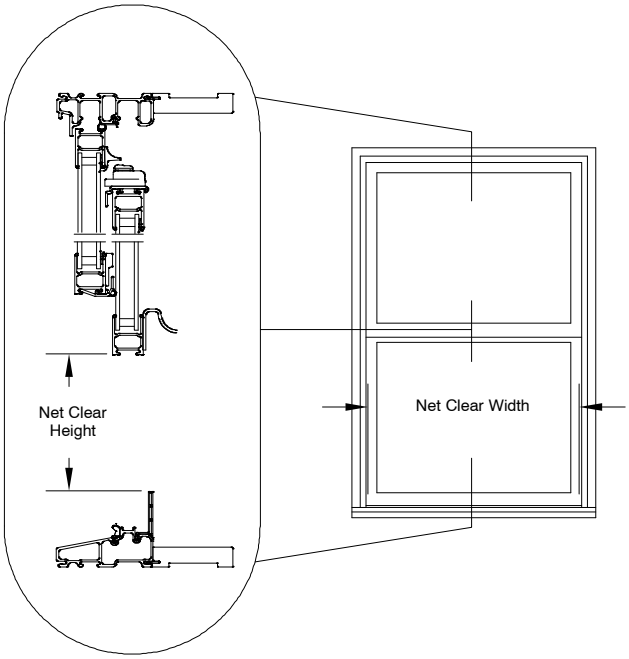

Code restrictions may vary depending on your local building codes.
For additional information contact your local code department for IBC and IRC requirements.

ALL ULTREX DOUBLE HUNG

EGRESS, LITE, AND VENT MEASUREMENTS

All Ultrex Single Hung and Double Hung Units						
Call #	Clear Opening Width	Clear Opening Height	Egress Clear Opening	Floor To Sill Height	Vent Opening	Daylight Opening
	Inches	Inches	Sq. Ft.	Inches	Sq. Ft.	Sq. Ft.
1620	14.56	7.21	0.73	60.65	0.73	1.45
1626	14.56	10.21	1.03	54.65	1.03	1.97
1630	14.56	13.21	1.34	48.65	1.34	2.50
1636	14.56	16.21	1.64	42.65	1.64	3.02
1640	14.56	19.21	1.94	36.65	1.94	3.54
1646	14.56	22.21	2.25	30.65	2.25	4.07
1650	14.56	25.21	2.55	24.65	2.55	4.59
1656*	14.56	28.21	2.85	18.65	2.85	5.11
1660*	14.56	31.21	3.16	12.65	3.16	5.64
1666*	14.56	34.21	3.46	6.65	3.46	6.16
2020	20.56	7.21	1.03	60.65	1.03	2.14
2026	20.56	10.21	1.46	54.65	1.46	2.92
2030	20.56	13.21	1.89	48.65	1.89	3.69
2036	20.56	16.21	2.31	42.65	2.31	4.46
2040	20.56	19.21	2.74	36.65	2.74	5.24
2046	20.56	22.21	3.17	30.65	3.17	6.01
2050	20.56	25.21	3.60	24.65	3.60	6.78
2056*	20.56	28.21	4.03	18.65	4.03	7.56
2060*	20.56	31.21	4.46	12.65	4.46	8.33
2066*	20.56	34.21	4.88	6.65	4.88	9.10
2620	26.56	7.21	1.33	60.65	1.33	2.83
2626	26.56	10.21	1.88	54.65	1.88	3.86
2630	26.56	13.21	2.44	48.65	2.44	4.88
2636	26.56	16.21	2.99	42.65	2.99	5.90
2640	26.56	19.21	3.54	36.65	3.54	6.93
2646	26.56	22.21	4.10	30.65	4.10	7.95
2650	26.56	25.21	4.65	24.65	4.65	8.97
2656*	26.56	28.21	5.20	18.65	5.20	10.00
2660E*	26.56	31.21	5.76	12.65	5.76	11.02
2666E*	26.56	34.21	6.31	6.65	6.31	12.04
2820	28.56	7.21	1.43	60.65	1.43	3.07
2826	28.56	10.21	2.02	54.65	2.02	4.17
2830	28.56	13.21	2.62	48.65	2.62	5.28
2836	28.56	16.21	3.21	42.65	3.21	6.39
2840	28.56	19.21	3.81	36.65	3.81	7.49

All Ultrex Single Hung and Double Hung Units						
Call #	Clear Opening Width	Clear Opening Height	Egress Clear Opening	Floor To Sill Height	Vent Opening	Daylight Opening
	Inches	Inches	Sq. Ft.	Inches	Sq. Ft.	Sq. Ft.
2846	28.56	22.21	4.41	30.65	4.41	8.60
2850	28.56	25.21	5.00	24.65	5.00	9.71
2856*	28.56	28.21	5.60	18.65	5.60	10.81
2860E*	28.56	31.21	6.19	12.65	6.19	11.92
2866E*	28.56	34.21	6.79	6.65	6.79	13.03
3020	32.56	7.21	1.63	60.65	1.63	3.07
3026	32.56	10.21	2.31	54.65	2.31	4.80
3030	32.56	13.21	2.99	48.65	2.99	6.07
3036	32.56	16.21	3.67	42.65	3.67	7.35
3040	32.56	19.21	4.34	36.65	4.34	8.62
3046	32.56	22.21	5.02	30.65	5.02	9.89
3050E	32.56	25.21	5.70	24.65	5.70	11.17
3056E*	32.56	28.21	6.38	18.65	6.38	12.44
3060E*	32.56	31.21	7.06	12.65	7.06	13.71
3066E*	32.56	34.21	7.74	6.65	7.74	14.99
3620	38.56	7.21	1.93	60.65	1.93	4.22
3626	38.56	10.21	2.73	54.65	2.73	5.74
3630	38.56	13.21	3.54	48.65	3.54	7.27
3636	38.56	16.21	4.34	42.65	4.34	8.79
3640	38.56	19.21	5.14	36.65	5.14	10.31
3646	38.56	22.21	5.95	30.65	5.95	11.84
3650E	38.56	25.21	6.75	24.65	6.75	13.36
3656E*	38.56	28.21	7.55	18.65	7.55	14.88
3660E*	38.56	31.21	8.36	12.65	8.36	16.41
3666E*	38.56	34.21	9.16	6.65	9.16	17.93
4020	44.56	7.21	2.23	60.65	2.23	4.91
4026	44.56	10.21	3.16	54.65	3.16	6.69
4030	44.56	13.21	4.09	48.65	4.09	8.46
4036	44.56	16.21	5.02	42.65	5.02	10.23
4040	44.56	19.21	5.94	36.65	5.94	12.01
4046	44.56	22.21	6.87	30.65	6.87	13.78
4050E	44.56	25.21	7.80	24.65	7.80	15.55
4056E*	44.56	28.21	8.73	18.65	8.73	17.33
4060E*	44.56	31.21	9.66	12.65	9.66	19.10
4066E*	44.56	34.21	10.59	6.65	10.59	20.87

NOTE: These units may optionally include a sash limiting device, which can be released from the inside without the use of a key, tool, special knowledge, or force greater than required for normal unit operation. The sash limiting device is not a “window opening control device” per ASTM F 2090. It is not designed to prevent child falls.

ALL ULTREX DOUBLE HUNG

EGRESS, LITE, AND VENT MEASUREMENTS

All Ultrex Cottage (2/5 : 3/5) Single Hung and Double Hung Units								
Call #	Egress Width	Egress Height	Egress Clear Opening	Floor To Clear Opening**	Vent	DLO	Checkrail Height	
	Inches	Inches	Sq. Ft.	Inches	Sq. Ft.	Sq. Ft.	Inches	(mm)
1626	14.56	7.72	0.78	54.65	0.78	2.41	17.68	449
1630	14.56	10.12	1.02	48.65	1.02	3.03	21.28	540
1636	14.56	12.52	1.27	42.65	1.27	3.66	24.88	632
1640	14.56	14.92	1.51	36.65	1.51	4.29	28.48	723
1646	14.56	17.32	1.75	30.65	1.75	4.92	32.08	815
1650	14.56	19.72	1.99	24.65	1.99	5.55	35.68	906
1656	14.56	22.21	2.25	18.65	2.25	6.16	39.19	996
2026	20.56	7.72	1.10	54.65	1.10	3.56	17.68	449
2030	20.56	10.12	1.45	48.65	1.45	4.48	21.28	540
2036	20.56	12.52	1.79	42.65	1.79	5.41	24.88	632
2040	20.56	14.92	2.13	36.65	2.13	6.34	28.48	723
2046	20.56	17.32	2.47	30.65	2.47	7.27	32.08	815
2050	20.56	19.72	2.82	24.65	2.82	8.20	35.68	906
2056	20.56	22.21	3.17	18.65	3.17	9.10	39.19	996
2626	26.56	7.72	1.42	54.65	1.42	4.71	17.68	449
2630	26.56	10.12	1.87	48.65	1.87	5.93	21.28	540
2636	26.56	12.52	2.31	42.65	2.31	7.16	24.88	632
2640	26.56	14.92	2.75	36.65	2.75	8.39	28.48	723
2646	26.56	17.32	3.20	30.65	3.20	9.62	32.08	815
2650	26.56	19.72	3.64	24.65	3.64	10.85	35.68	906
2656	26.56	22.21	4.10	18.65	4.10	12.04	39.19	996
2826	28.56	7.72	1.53	54.65	1.53	5.09	17.68	449
2830	28.56	10.12	2.01	48.65	2.01	6.42	21.28	540
2836	28.56	12.52	2.48	42.65	2.48	7.74	24.88	632
2840	28.56	14.92	2.96	36.65	2.96	9.07	28.48	723
2846	28.56	17.32	3.44	30.65	3.44	10.40	32.08	815
2850	28.56	19.72	3.91	24.65	3.91	11.73	35.68	906
2856	28.56	22.21	4.41	18.65	4.41	13.03	39.19	996

ALL ULTREX DOUBLE HUNG

EGRESS, LITE, AND VENT MEASUREMENTS

All Ultrex Cottage (2/5 : 3/5) Single Hung and Double Hung Units								
Call #	Egress Width	Egress Height	Egress Clear Opening	Floor To Clear Opening**	Vent	DLO	Checkrail Height	
	Inches	Inches	Sq. Ft.	Inches	Sq. Ft.	Sq. Ft.	Inches	(mm)
3026	32.56	7.72	1.75	54.65	1.75	5.85	17.68	449
3030	32.56	10.12	2.29	48.65	2.29	7.38	21.28	540
3036	32.56	12.52	2.83	42.65	2.83	8.91	24.88	632
3040	32.56	14.92	3.37	36.65	3.37	10.44	28.48	723
3046	32.56	17.32	3.92	30.65	3.92	11.97	32.08	815
3050	32.56	19.72	4.46	24.65	4.46	13.49	35.68	906
3056	32.56	22.21	5.02	18.65	5.02	14.99	39.19	996
3626	38.56	7.72	2.07	54.65	2.07	7.00	17.68	449
3630	38.56	10.12	2.71	48.65	2.71	8.83	21.28	540
3636	38.56	12.52	3.35	42.65	3.35	10.66	24.88	632
3640	38.56	14.92	4.00	36.65	4.00	12.49	28.48	723
3646	38.56	17.32	4.64	30.65	4.64	14.32	32.08	815
3650	38.56	19.72	5.28	24.65	5.28	16.14	35.68	906
3656	38.56	22.21	5.95	18.65	5.95	17.93	39.19	996
4026	44.56	7.73	2.39	54.65	2.39	8.15	17.67	449
4030	44.56	10.12	3.13	48.65	3.13	10.28	21.28	540
4036	44.56	12.52	3.88	42.65	3.88	12.41	24.88	632
4040	44.56	14.92	4.62	36.65	4.62	14.54	28.48	723
4046	44.56	17.32	5.36	30.65	5.36	16.67	32.08	815
4050	44.56	19.72	6.10	24.65	6.10	18.79	35.68	906
4056	44.56	22.21	6.87	18.65	6.87	20.87	39.19	996

ALL ULTREX DOUBLE HUNG

EGRESS, LITE, AND VENT MEASUREMENTS

All Ultrex Reverse Cottage (3/5 : 2/5) Single Hung and Double Hung Units							
	Egress Width	Egress Height	Egress Clear Opening	Floor To Clear Opening**	Vent	DLO	Checkrail Height
UNIT #	Inches	Inches	Sq. Ft.	Inches	Sq. Ft.	Sq. Ft.	Inches
1626	14.56	7.72	0.78	54.65	0.78	1.54	12.71
1630	14.56	10.12	1.02	48.65	1.02	1.96	15.11
1636	14.56	12.52	1.27	42.65	1.27	2.38	17.51
1640	14.56	14.92	1.51	36.65	1.51	2.80	19.91
1646	14.56	17.32	1.75	30.65	1.75	3.21	22.31
1650	14.56	19.72	1.99	24.65	1.99	3.63	24.71
1656	14.56	22.21	2.25	18.65	2.25	4.07	27.19
2026	20.56	7.72	1.10	54.65	1.10	2.28	12.71
2030	20.56	10.12	1.45	48.65	1.45	2.89	15.11
2036	20.56	12.52	1.79	42.65	1.79	3.51	17.51
2040	20.56	14.92	2.13	36.65	2.13	4.13	19.91
2046	20.56	17.32	2.47	30.65	2.47	4.75	22.31
2050	20.56	19.72	2.82	24.65	2.82	5.37	24.71
2056	20.56	22.21	3.17	18.65	3.17	6.01	27.19
2626	26.56	7.72	1.42	54.65	1.42	3.01	12.71
2630	26.56	10.12	1.87	48.65	1.87	3.83	15.11
2636	26.56	12.52	2.31	42.65	2.31	4.65	17.51
2640	26.56	14.92	2.75	36.65	2.75	5.47	19.91
2646	26.56	17.32	3.20	30.65	3.20	6.29	22.31
2650	26.56	19.72	3.64	24.65	3.64	7.10	24.71
2656	26.56	22.21	4.10	18.65	4.10	7.95	27.19
2826	28.56	7.72	1.53	54.65	1.53	3.26	12.71
2830	28.56	10.12	2.01	48.65	2.01	4.14	15.11
2836	28.56	12.52	2.48	42.65	2.48	5.03	17.51
2840	28.56	14.92	2.96	36.65	2.96	5.91	19.91
2846	28.56	17.32	3.44	30.65	3.44	6.80	22.31
2850	28.56	19.72	3.91	24.65	3.91	7.68	24.71
2856	28.56	22.21	4.41	18.65	4.41	8.60	27.19

ALL ULTREX DOUBLE HUNG

EGRESS, LITE, AND VENT MEASUREMENTS

All Ultrex Reverse Cottage (3/5 : 2/5) Single Hung and Double Hung Units							
	Egress Width	Egress Height	Egress Clear Opening	Floor To Clear Opening**	Vent	DLO	Checkrail Height
UNIT #	Inches	Inches	Sq. Ft.	Inches	Sq. Ft.	Sq. Ft.	Inches
3026	32.56	7.72	1.75	54.65	1.75	3.75	12.71
3030	32.56	10.12	2.29	48.65	2.29	4.76	15.11
3036	32.56	12.52	2.83	42.65	2.83	5.78	17.51
3040	32.56	14.92	3.37	36.65	3.37	6.80	19.91
3046	32.56	17.32	3.92	30.65	3.92	7.82	22.31
3050	32.56	19.72	4.46	24.65	4.46	8.84	24.71
3056	32.56	22.21	5.02	18.65	5.02	9.89	27.19
3626	38.56	7.72	2.07	54.65	2.07	4.48	12.71
3630	38.56	10.12	2.71	48.65	2.71	5.70	15.11
3636	38.56	12.52	3.35	42.65	3.35	6.92	17.51
3640	38.56	14.92	4.00	36.65	4.00	8.14	19.91
3646	38.56	17.32	4.64	30.65	4.64	9.36	22.31
3650	38.56	19.72	5.28	24.65	5.28	10.57	24.71
3656	38.56	22.21	5.95	18.65	5.95	11.84	27.19
4026	44.56	7.73	2.39	54.65	2.39	5.22	12.71
4030	44.56	10.12	3.13	48.65	3.13	6.64	15.11
4036	44.56	12.52	3.88	42.65	3.88	8.05	17.51
4040	44.56	14.92	4.62	36.65	4.62	9.47	19.91
4046	44.56	17.32	5.36	30.65	5.36	10.89	22.31
4050	44.56	19.72	6.10	24.65	6.10	12.31	24.71
4056	44.56	22.21	6.87	18.65	6.87	13.78	27.19

EGRESS. LITE, AND VENT MEASUREMENTS

All Ultrex Sliding Picture/Transom Units			
Call #	DLO Width	DLO Height	DLO
	inches	inches	Sq. Ft.
1610	12.56	6.56	0.57
1616	12.56	12.56	1.1
1620	12.56	18.56	1.62
1626	12.56	24.56	2.14
1630	12.56	30.56	2.67
1636	12.56	36.56	3.19
1640	12.56	42.56	3.71
1646	12.56	48.56	4.24
1650	12.56	54.56	4.76
1656	12.56	60.56	5.28
1660	12.56	66.56	5.81
2010	18.56	6.56	0.85
2016	18.56	12.56	1.62
2020	18.56	18.56	2.39
2026	18.56	24.56	3.17
2030	18.56	30.56	3.94
2036	18.56	36.56	4.71
2040	18.56	42.56	5.49
2046	18.56	48.56	6.26
2050	18.56	54.56	7.03
2056	18.56	60.56	7.81
2060	18.56	66.56	8.58
2610	24.56	6.56	1.12
2616	24.56	12.56	2.14
2620	24.56	18.56	3.17
2626	24.56	24.56	4.19
2630	24.56	30.56	5.21
2636	24.56	36.56	6.24
2640	24.56	42.56	7.26
2646	24.56	48.56	8.28
2650	24.56	54.56	9.31
2656	24.56	60.56	10.33
2660	24.56	66.56	11.35
2810	26.56	6.56	1.21
2816	26.56	12.56	2.32
2820	26.56	18.56	3.42
2826	26.56	24.56	4.53
2830	26.56	30.56	5.64
2836	26.56	36.56	6.74
2840	26.56	42.56	7.85
2846	26.56	48.56	8.96
2850	26.56	54.56	10.06
2856	26.56	60.56	11.17
2860	26.56	66.56	12.28

FORMULA TO CALCULATE UNIT DAYLIGHT OPENING FOR TRANSOM OR PICTURE:

R.O. Width – 5 7/16″ (138) = Daylight Opening Width

R.O. Height – 5 7/16″ (138) = Daylight Opening Height

ALL ULTREX DOUBLE HUNG

EGRESS. LITE, AND VENT MEASUREMENTS

All Ultrex Sliding Picture/Transom Units			
Call #	DLO Width	DLO Height	DLO
	inches	inches	Sq. Ft.
3010	30.56	6.56	1.39
3016	30.56	12.56	2.67
3020	30.56	18.56	3.94
3026	30.56	24.56	5.21
3030	30.56	30.56	6.49
3036	30.56	36.56	7.76
3040	30.56	42.56	9.03
3046	30.56	48.56	10.31
3050	30.56	54.56	11.58
3056	30.56	60.56	12.85
3060	30.56	66.56	14.13
3610	36.56	6.56	1.67
3616	36.56	12.56	3.19
3620	36.56	18.56	4.71
3626	36.56	24.56	6.24
3630	36.56	30.56	7.76
3636	36.56	36.56	9.28
3640	36.56	42.56	10.81
3646	36.56	48.56	12.33
3650	36.56	54.56	13.85
3656	36.56	60.56	15.38
3660	36.56	66.56	16.9
4010	42.56	6.56	1.94
4016	42.56	12.56	3.71
4020	42.56	18.56	5.49
4026	42.56	24.56	7.26
4030	42.56	30.56	9.03
4036	42.56	36.56	10.81
4040	42.56	42.56	12.58
4046	42.56	48.56	14.35
4050	42.56	54.56	16.13
4056	42.56	60.56	17.9
4060	42.56	66.56	19.67
4066	42.56	72.56	21.45
5010	54.56	6.56	2.49
5016	54.56	12.56	4.76
5020	54.56	18.56	7.03
5026	54.56	24.56	9.31
5030	54.56	30.56	11.58
5036	54.56	36.56	13.85
5040	54.56	42.56	16.13
5046	54.56	48.56	18.4
5050	54.56	54.56	20.67
5056	54.56	60.56	22.95
5060	54.56	66.56	25.22

FORMULA TO CALCULATE UNIT DAYLIGHT OPENING FOR TRANSOM OR PICTURE:

R.O. Width – 5 7/16″ (138) = Daylight Opening Width

R.O. Height – 5 7/16″ (138) = Daylight Opening Height

EGRESS CALCULATIONS/ MINIMUM AND MAXIMUM GUIDELINES

Double Hung Egress Calculations for Custom Size Units		
Minimum Value For Net Clear Opening	Desired Dimension	Formula
20 Inch Width	Egress Opening Width (inches)	= Frame OM Width - 2.936
24 Inch Height	Egress Opening Height (Inches)	= (Frame OM Height - 4.656)*x) - 2.215
5.7 Square Feet	Egress Opening Area (SqFt)	= (Egress Width x Egress Height)/144
x - is the sash ratio of the smallest sash to overall glass height		

Integrity All Ultrex Double Hung				
Min and Max Size Parameters				
Product	Frame Size			
	Max Width (in)	Max Height (in)	Min Width (in)	Min Height (in)
Double Hung				
Equal Sash	47.5	77.5	17.5	23.5
	Call Size 4066		Call Size 1620	
Un–Equal Sash	47.5	65.359	17.5	28.211
	Call Size 4056		Call Size 1626	
Sliding Window Transom				
	59.5	23.5	17.5	11.5
	Call Size 5020		Call Size 1610	
Sliding Window Picture				
	59.5	71.5	17.5	23.5
	Call Size 5060		Call Size 1620	

ALL ULTREX DOUBLE HUNG

SIZING GUIDELINES AND MEASUREMENT CONVERSIONS

MULTIPLE ASSEMBLIES – Factory Mull Configuration.
Field mull kits are available. Mulling beyond limitations is not recommended.
MAXIMUM ROUGH OPENING ASSEMBLY UP TO 6W1H: 114″ (2896mm) X 78″ (1981mm)
MAXIMUM ROUGH OPENING ASSEMBLY UP TO 5W5H : 96″ (2438mm) X 96″ (2438mm)

CALCULATING TOTAL ROUGH OPENING FOR ASSEMBLIES

WIDTH: ADD Frame Widths + 1/2″ (13 mm) per mull + 1/2″ (13 mm).
Tolerance = 1/4″ (6 mm) from frame to Rough Opening at left and right jamb.
HEIGHT: ADD Frame Heights + 1/2″ (13 mm) per mull + 1/2″ (13 mm).
Tolerance = 1/2″ (13 mm) from Frame to Rough Opening at head jamb.

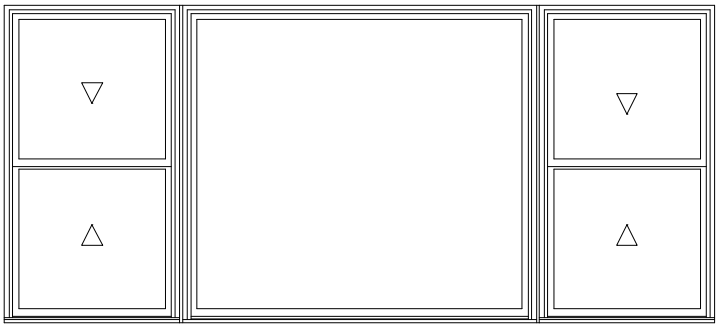

2 vertical mulls

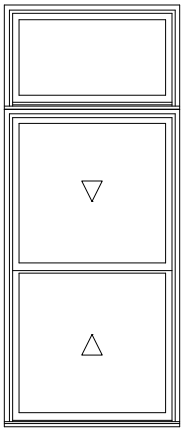

1 horizontal mull

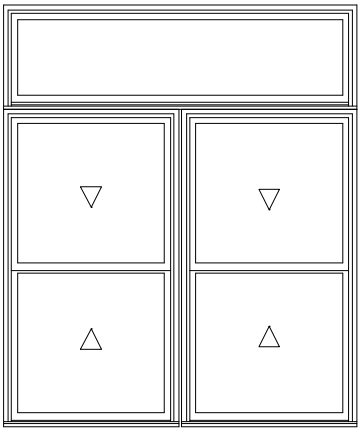

1 vertical mull
1 horizontal mull

MEASUREMENT CONVERSIONS				
All Ultrex Double Hung	**WIDTH**		**HEIGHT**	
Rough Opening to	**Imperial**	**Metric**	**Imperial**	**Metric**
Masonry Opening	0″	0 mm	– 1/4″	– 6 mm
Frame OM	–1/2″	– 13 mm	– 1/2″	– 13 mm
Sash OM	–2 3/4″	– 70 mm	(÷ 2) – 1″	(÷ 2) – 25 mm
Daylight Opening	–5 7/16″	– 138 mm	(÷ 2) – 3 11/16″	(÷ 2) – 94 mm
Glass Size	–4 5/16″	– 110 mm	(÷ 2) – 2 9/16″	(÷ 2) – 65 mm
Screen OM	–2 7/32″	– 56 mm	– 2 1/16″	– 53 mm
J–Channel OM	+3/4″	+ 19 mm	+ 3/4″	+ 19 mm
Transom/Picture				
Rough Opening to	**Imperial**	**Metric**	**Imperial**	**Metric**
Masonry Opening	0″	0 mm	– 1/4″	6 mm
Frame OM	–1/2″	– 13 mm	– 1/2″	– 13 mm
Sash OM	–2 3/4″	– 70 mm	– 2 3/4″	– 70 mm
Daylight Opening	–5 7/16″	– 138 mm	– 5 7/16″	– 138 mm
Glass Size	–4 5/16″	– 110 mm	– 4 5/16″	– 110 mm
J–Channel OM	+3/4″	+ 19 mm	+ 3/4″	+ 19 mm

ALL ULTREX DOUBLE HUNG

ELEVATIONS – All ULTREX DOUBLE HUNG UNITS Not To Scale

Mas. Opg.	1–6	(457)	2–0	(610)	2–6	(762)	2–8	(914)	3–0	(914)	3–6	(1067)	4–0	(1219)
Rgh. Opg.	1–6	(457)	2–0	(610)	2–6	(762)	2–8	(914)	3–0	(914)	3–6	(1067)	4–0	(1219)
Frame Size	1–5 1/2	(445)	1–11 1/2	(597)	2–5 1/2	(749)	2–7 1/2	(902)	2–11 1/2	(902)	3–5 1/2	(1054)	3–11 1/2	(1207)

Mas. Opg. / Rgh. Opg. / Frame Size							
1–11 3/4 (603) / 2–0 (610) / 1–11 1/2 (597)	IFDH1620	IFDH2020	IFDH2620	IFDH2820	IFDH3020	IFDH3620	IFDH4020
2–5 3/4 (756) / 2–6 (762) / 2–5 1/2 (749)	IFDH1626	IFDH2026	IFDH2626	IFDH2826	IFDH3026	IFDH3626	IFDH4026
2–11 3/4 (908) / 3–0 (914) / 2–11 1/2 (902)	IFDH1630	IFDH2030	IFDH2630	IFDH2830	IFDH3030	IFDH3630	IFDH4030
3–5 3/4 (1060) / 3–6 (1067) / 3–5 1/2 (1054)	IFDH1636	IFDH2036	IFDH2636	IFDH2836	IFDH3036	IFDH3636	IFDH4036
3–11 3/4 (1213) / 4–0 (1219) / 3–11 1/2 (1207)	IFDH1640	IFDH2040	IFDH2640	IFDH2840	IFDH3040	IFDH3640	IFDH4040
4–5 3/4 (1365) / 4–6 (1372) / 4–5 1/2 (1359)	IFDH1646	IFDH2046	IFDH2646	IFDH2846	IFDH3046	IFDH3646	IFDH4046
4–11 3/4 (1518) / 5–0 (1524) / 4–11 1/2 (1511)	IFDH1650	IFDH2050	IFDH2650	IFDH2850	IFDH3050E	IFSH3650E	IFDH4050E

NOTE:
E=These windows meet National Egress Codes for fire evacuation. Local codes may differ.

Standard GBGs patterns shown in above units. Optional: Customer specified equal lite cut patterns are available. Units are available with or without GBGs.

Imperial and metric dimensions are shown. Metric dimensions are in millimeters.

All units viewed from exterior.

ALL ULTREX DOUBLE HUNG

ELEVATIONS – All ULTREX DOUBLE HUNG UNITS Not To Scale

Mas. Opg.	1–6	(457)	2–0	(610)	2–6	(762)	2–8	(914)	3–0	(914)	3–6	(1067)	4–0	(1219)
Rgh. Opg.	1–6	(457)	2–0	(610)	2–6	(762)	2–8	(914)	3–0	(914)	3–6	(1067)	4–0	(1219)
Frame Size	1–5 1/2	(445)	1–11 1/2	(597)	2–5 1/2	(749)	2–7 1/2	(902)	2–11 1/2	(902)	3–5 1/2	(1054)	3–11 1/2	(1207)

5–5 3/4 (1670)
5–6 (1676)
5–5 1/2 (1664)

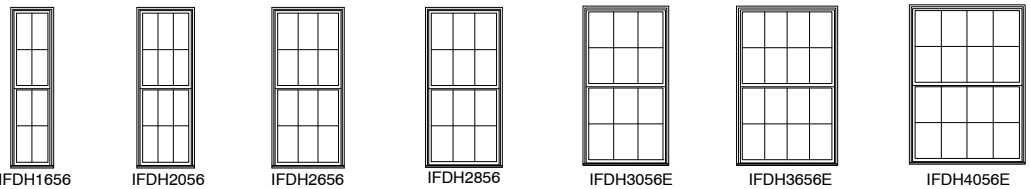

IFDH1656 IFDH2056 IFDH2656 IFDH2856 IFDH3056E IFDH3656E IFDH4056E

5–11 3/4 (1822)
6–0 (1829)
5–11 1/2 (1816)

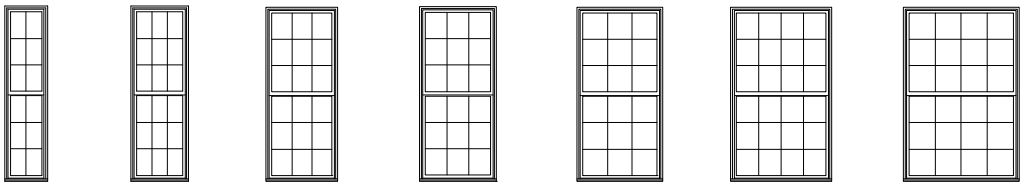

IFDH1660 IFDH2060 IFDH2660E IFDH2860E IFDH3060E IFDH3660E IFDH4060E

6–5 3/4 (1975)
6–6 (1981)
6–5 1/2 (1969)

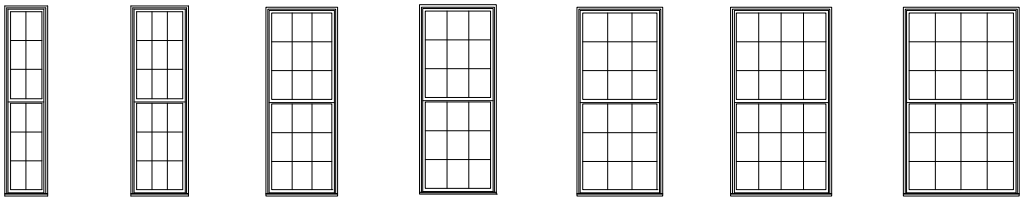

IFDH1666 IFDH2066 IFDH2666E IFDH2866E IFDH3066E IFDH3666E IFDH4066E

Mas. Opg.
Rgh. Opg.
Frame Size

SLIDING WINDOW TRANSOM

Mas. Opg.	1–6	(457)	2–0	(610)	2–6	(762)	2–8	(914)	3–0	(914)	3–6	(1067)	4–0	(1219)	5–0	(1524)
Rgh. Opg.	1–6	(457)	2–0	(610)	2–6	(762)	2–8	(914)	3–0	(914)	3–6	(1067)	4–0	(1219)	5–0	(1524)
Frame Size	1–5 1/2	(445)	1–11 1/2	(597)	2–5 1/2	(749)	2–7 1/2	(902)	2–11 1/2	(902)	3–5 1/2	(1054)	3–11 1/2	(1207)	4–11 1/2	(1511)

0–11 3/4 (298)
1–0 (305)
0–11 1/2 (292)

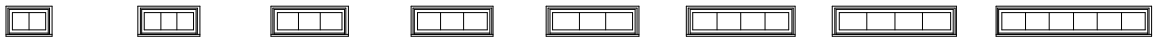

IFSLT1610 IFSLT2010 IFSLT2610 IFSLT2810 IFSLT3010 IFSLT3610 IFSLT4010 IFSLT5010

1–5 3/4 (451)
1–6 (457)
1–5 1/2 (445)

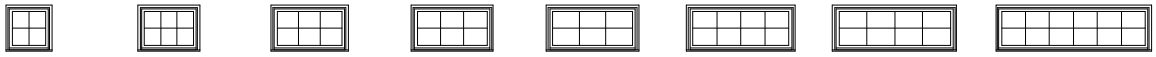

IFSLT1616 IFSLT2016 IFSLT2616 IFSLT2816 IFSLT3016 IFSLT3616 IFSLT4016 IFSLT5016

1–11 3/4 (603)
2–0 (610)
1–11 1/2 (597)

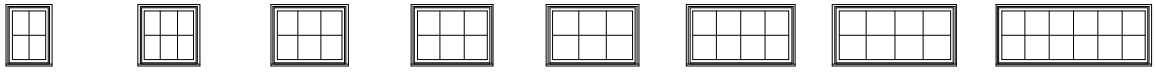

IFSLT1620 IFSLT2020 IFSLT2620 IFSLT2820 IFSLT3020 IFSLT3620 IFSLT4020 IFSLT5020

NOTE:
E=These windows meet National Egress Codes for fire evacuation. Local codes may differ.

Standard GBGs patterns shown in above units. Optional: Customer specified equal lite cut patterns are available. Units are available with or without GBGs.

Imperial and metric dimensions are shown. Metric dimensions are in millimeters.

All units viewed from exterior.

T = Tempered

ALL ULTREX DOUBLE HUNG

ELEVATIONS – ALL ULTREX PICTURE UNITS Not To Scale

Mas. Opg.	1–6	(457)	2–0	(610)	2–6	(762)	2–8	(914)	3–0	(914)	3–6	(1067)	4–0	(1219)	5–0	(1524)
Rgh. Opg.	1–6	(457)	2–0	(610)	2–6	(762)	2–8	(914)	3–0	(914)	3–6	(1067)	4–0	(1219)	5–0	(1524)
Frame Size	1–5 1/2	(445)	1–11 1/2	(597)	2–5 1/2	(749)	2–7 1/2	(902)	2–11 1/2	(902)	3–5 1/2	(1054)	3–11 1/2	(1207)	4–11 1/2	(1511)

Mas. Opg. / Rgh. Opg. / Frame Size								
1–11 3/4 (603) / 2–0 (610) / 1–11 1/2 (597)	IFSLP1620	IFSLP2020	IFSLP2620	IFSLP2820	IFSLP3020	IFSLP3620	IFSLP4020	IFSLP5020
2–5 3/4 (756) / 2–6 (762) / 2–5 1/2 (749)	IFSLP1626	IFSLP2026	IFSLP2626	IFSLP2826	IFSLP3026	IFSLP3626	IFSLP4026	IFSLP5026
2–11 3/4 (908) / 3–0 (914) / 2–11 1/2 (902)	IFSLP1630	IFSLP2030	IFSLP2630	IFSLP2830	IFSLP3030	IFSLP3630	IFSLP4030	IFSLP5030
3–5 3/4 (1060) / 3–6 (1067) / 3–5 1/2 (1054)	IFSLP1636	IFSLP2036	IFSLP2636	IFSLP2836	IFSLP3036	IFSLP3636	IFSLP4036	IFSLP5036
3–11 3/4 (1213) / 4–0 (1219) / 3–11 1/2 (1207)	IFSLP1640	IFSLP2040	IFSLP2640	IFSLP2840	IFSLP3040	IFSLP3640	IFSLP4040	IFSLP5040
4–5 3/4 (1365) / 4–6 (1372) / 4–5 1/2 (1359)	IFSLP1646	IFSLP2046	IFSLP2646	IFSLP2846	IFSLP3046	IFSLP3646	IFSLP4046	IFSLP5046
4–11 3/4 (1518) / 5–0 (1524) / 4–11 1/2 (1511)	IFSLP1650	IFSLP2050	IFSLP2650	IFSLP2850	IFSLP3050	IFSLP3650	IFSLP4050	IFSLP5050
5–5 3/4 (1670) / 5–6 (1676) / 5–5 1/2 (1664)	IFSLP1656	IFSLP2056	IFSLP2656	IFSLP2856	IFSLP3056	IFSLP3656	IFSLP4056	IFSLP5056
5–11 3/4 (1822) / 6–0 (1829) / 5–11 1/2 (1816)	IFSLP1660	IFSLP2060	IFSLP2660	IFSLP2860	IFSLP3060	IFSLP3660	IFSLP4060	IFSLP5060

ALL ULTREX DOUBLE HUNG

SECTION DETAILS SCALE: 3″ = 1′0″

OPERATING – 2″

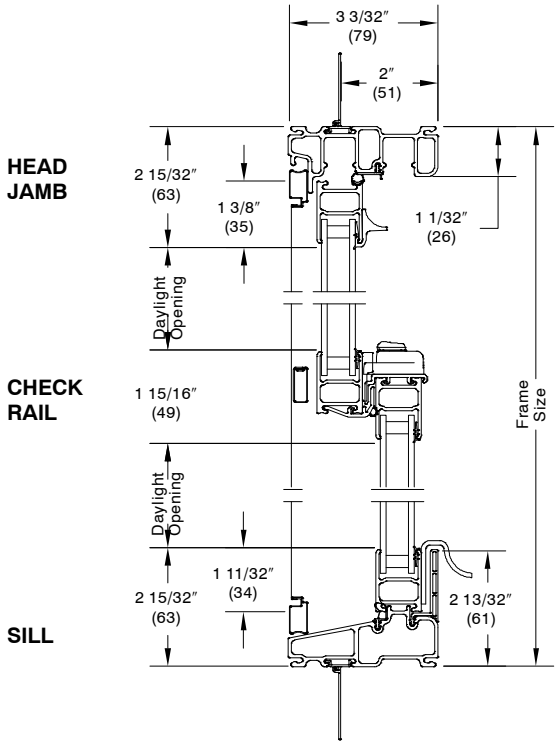

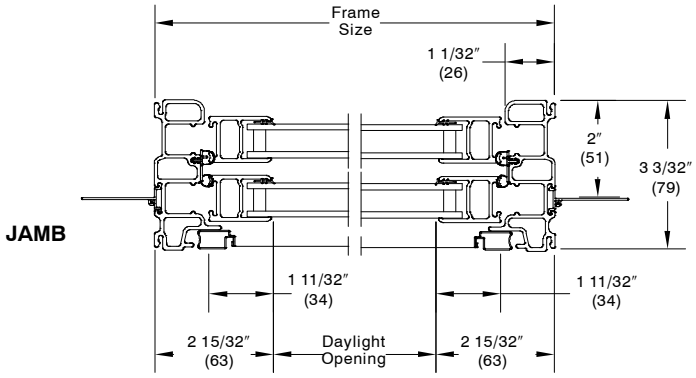

OPERATING – 6 9/16″

NOTE:
Units also available with 4 9/16″ jamb. Same jamb extension profile as 6 9/16″ jamb extension shown.

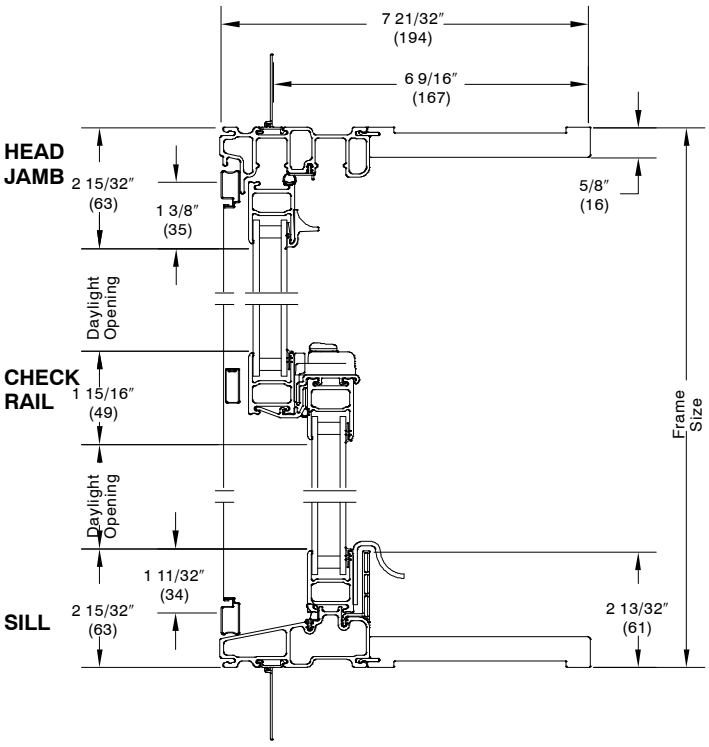

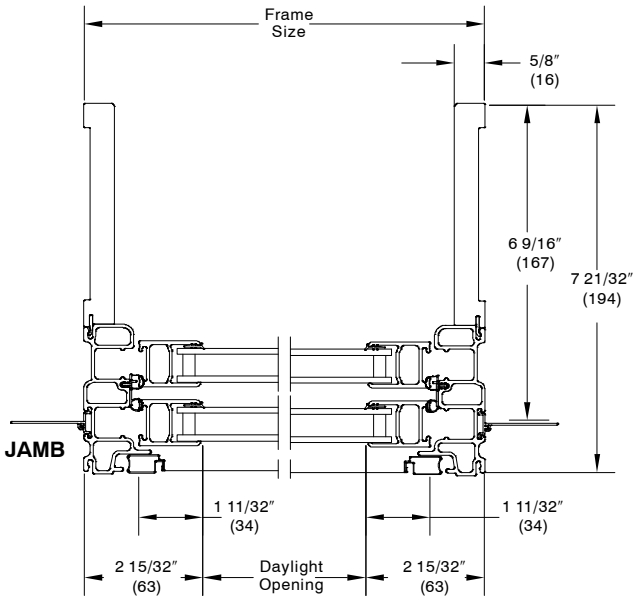

ALL ULTREX DOUBLE HUNG

SECTION DETAILS SCALE: 3″ = 1′0″

TRANSOM/PICTURE – 2″

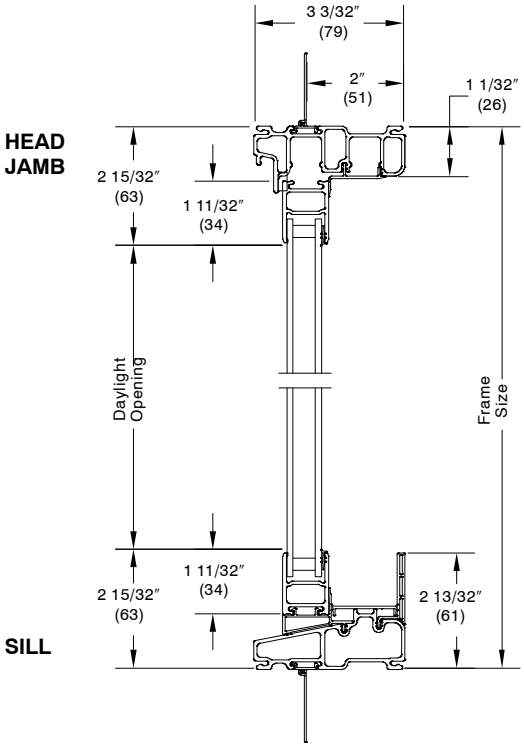

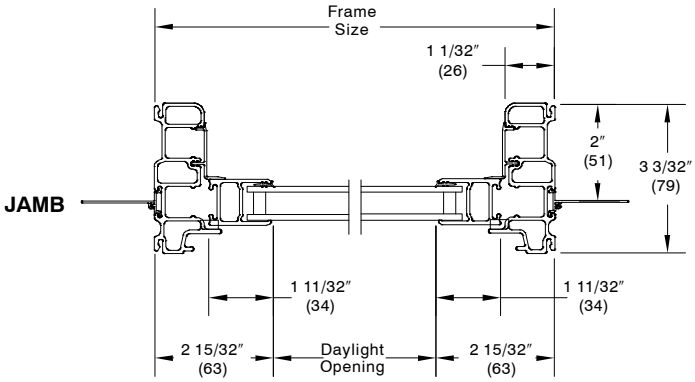

TRANSOM/PICTURE – 6 9/16″

NOTE:
Units also available with 4 9/16″ jamb. Same jamb extension profile as 6 9/16″ jamb extension shown.

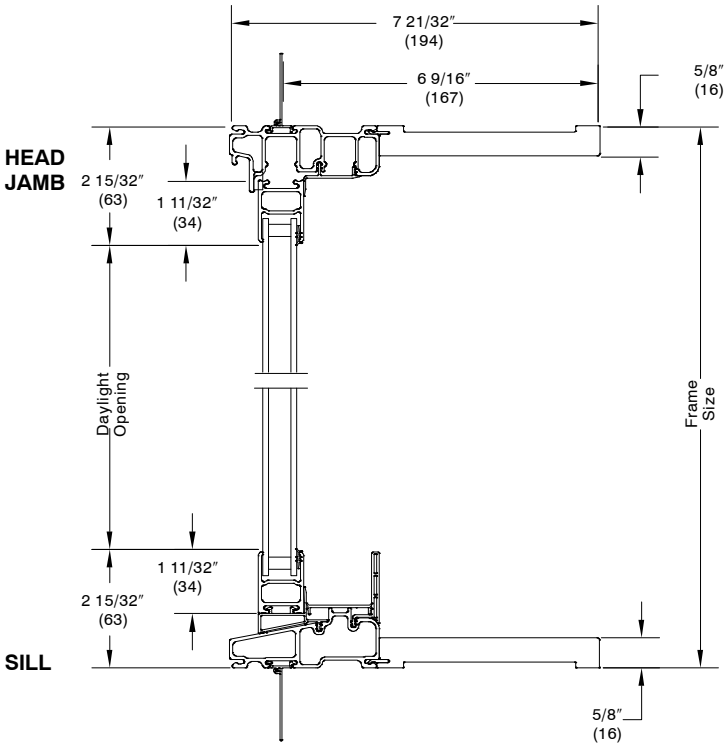

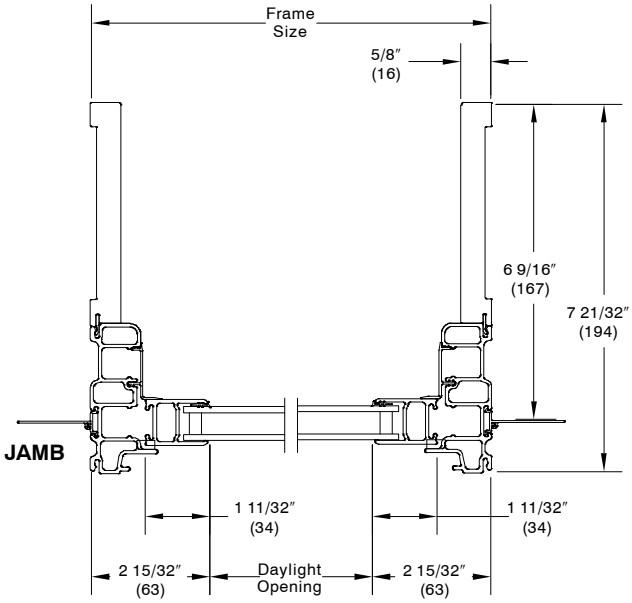

MULLIONS

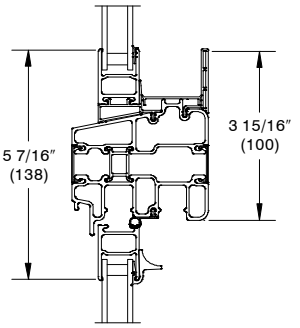

HORIZONTAL TRANSOM OVER OPERATING UNIT

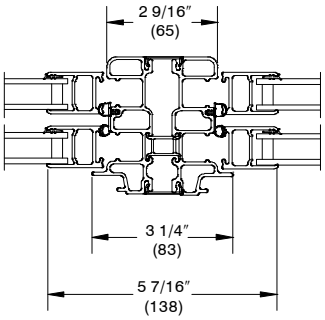

VERTICAL DOUBLE HUNG UNITS 2 WIDE

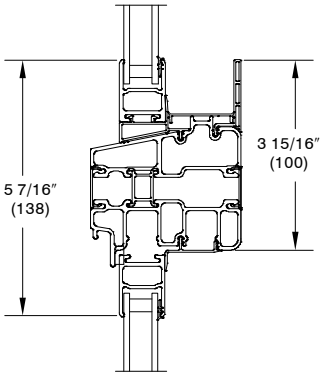

HORIZONTAL TRANSOM OVER PICTURE UNIT

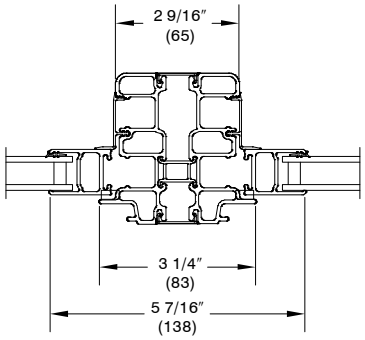

VERTICAL PICTURE UNIT 2 WIDE

DIVIDED LITE OPTIONS

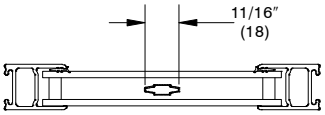

ALUMINUM GRILLE BETWEEN GLASS

All Ultrex Double Hung Operators

GBGs are available in standard rectangular lite cuts, optional 2W1H, 2W2H lite pattern, or 6–lite Prairie cuts.

GBG

NOTE:
Prairie cut 6 lite per sash on Double Hung or 9 lite on picture unit.

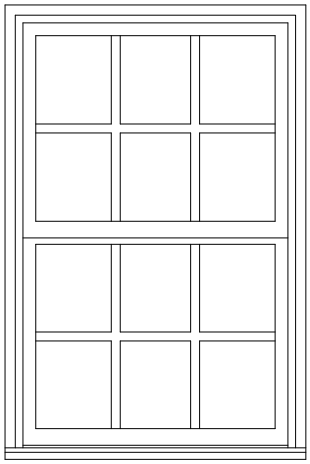

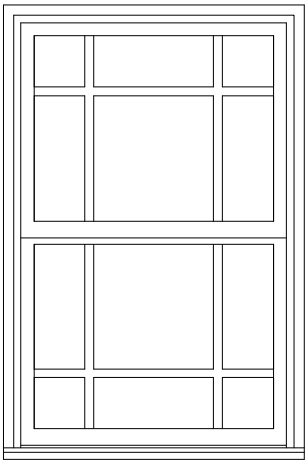

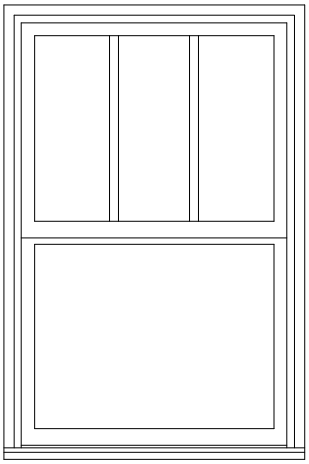

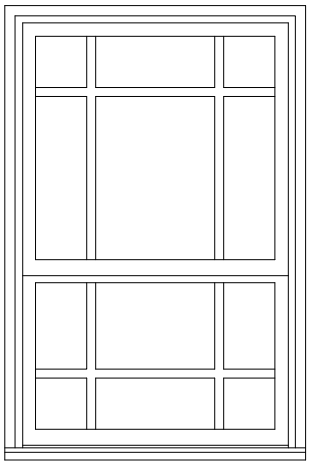

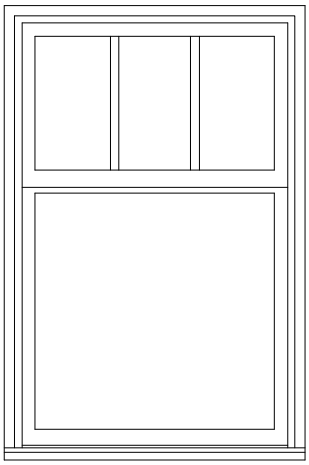

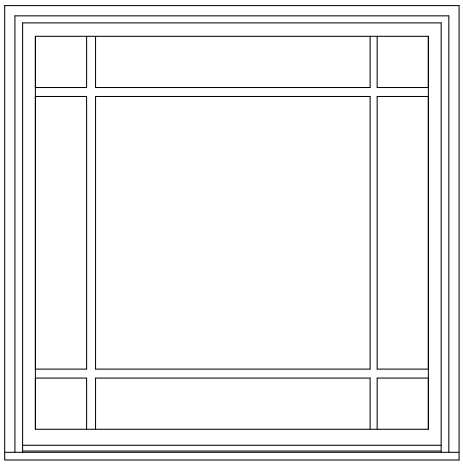

Conversion Formula:

$$\frac{\text{Total DLO} - \text{Total bar width}}{\text{Number of lites}} = \text{Individual DLO}$$

* Prairie lite cuts are **not** available in the following sizes due to size limitations.

IFDH call number 16 width
IFDH call number 20 or 26 height

ALL ULTREX DOUBLE HUNG

INSTALLATION SUGGESTIONS Scale 3″ = 1′ 0″

HEAD
JAMB

SILL

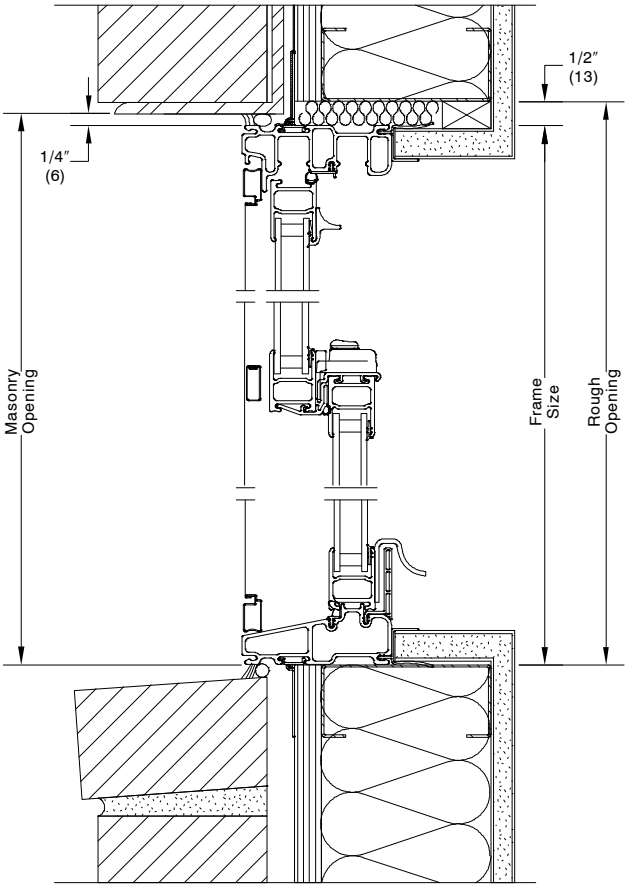

JAMB

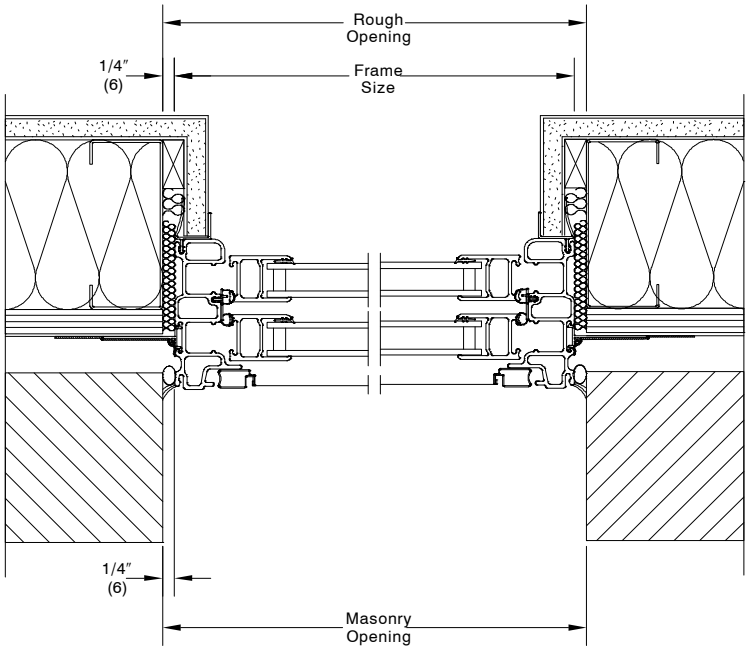

BRICK VENEER WITH STEEL FRAME CONSTRUCTION

NOTE:
Shown with optional sheetrock return.
Picture unit installation similar.
The above wall sections represent typical wall conditions, these details are not intended as installation instructions. Please refer to the installation instructions provided with the purchased units.

ALL ULTREX DOUBLE HUNG

INSTALLATION SUGGESTIONS Scale 3″ = 1′ 0″

HEAD
JAMB

SILL

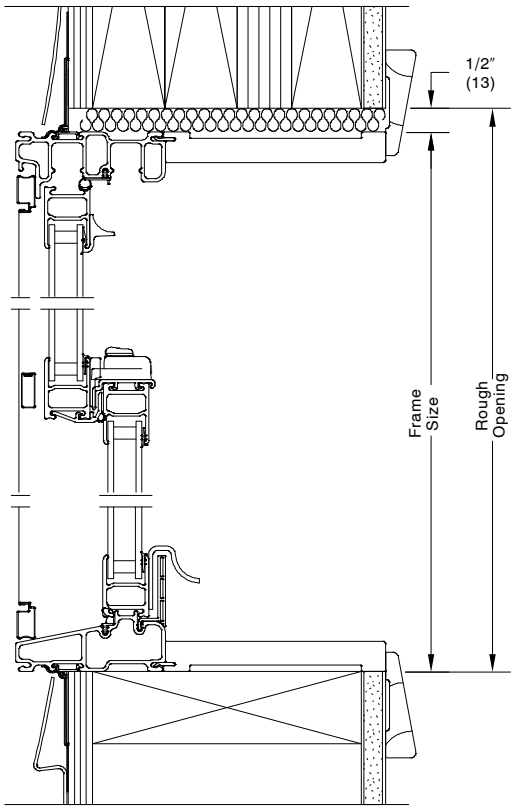

JAMB

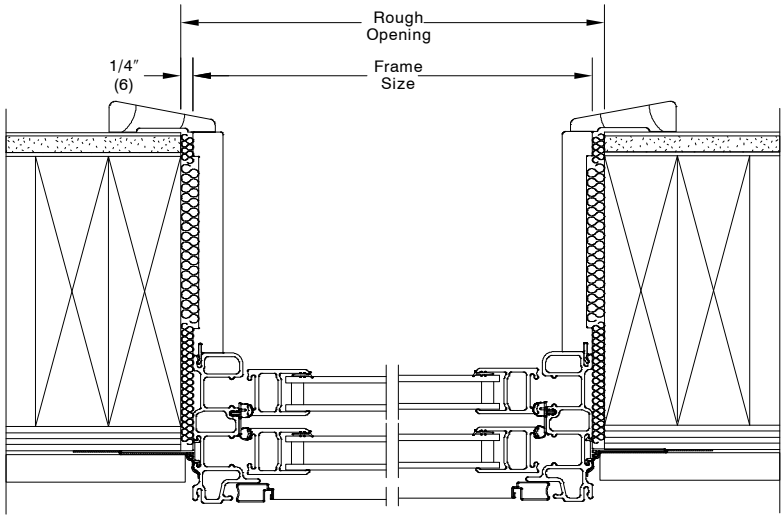

VINYL SIDING WITH 2X6 FRAME CONSTRUCTION

NOTE:
Shown with optional jamb extension and J–channels.
Picture unit installation similar.
The above wall sections represent typical wall conditions, these details are not intended as installation instructions.
Please refer to the installation instructions provided with the purchased units.

ALL ULTREX DOUBLE HUNG

INSTALLATION SUGGESTIONS Scale 3″ = 1′ 0″

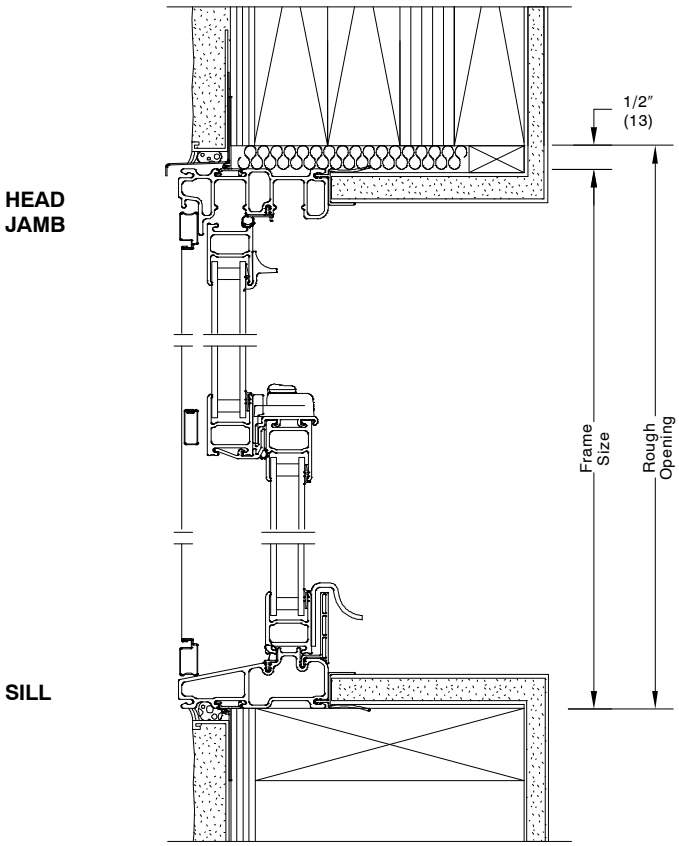

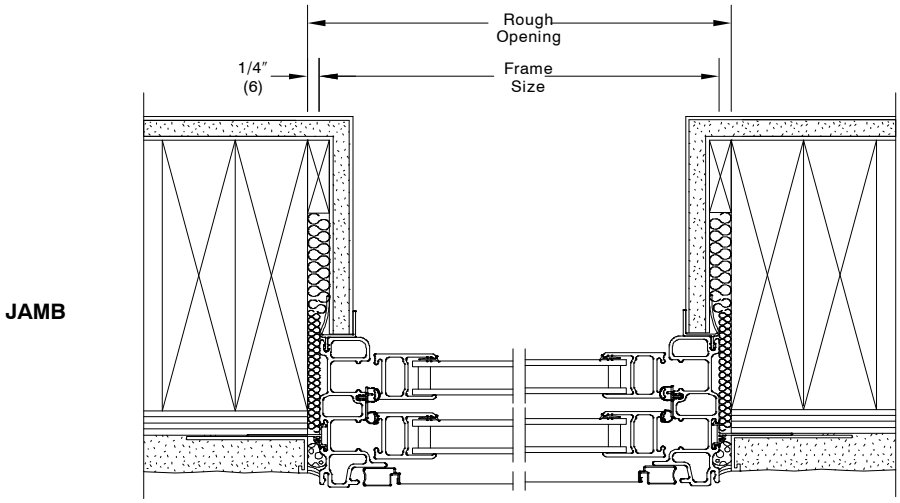

STUCCO WITH 2X6 FRAME CONSTRUCTION

NOTE:
Shown with optional sheetrock return.
Picture unit installation similar.
The above wall sections represent typical wall conditions, these details are not intended as installation instructions.
Please refer to the installation instructions provided with the purchased units.