CHAPTER 12

INTEGRITY ALL ULTREX POLYGON

Unit Features 12.2
Sizing Guidelines / Measurement Conversions 12.3
Section Details – Direct Glaze – 2″, 4 9/16″, and 6 9/16″Jambs 12.4
Section Details – Direct Glaze – Transom for IFSPD 12.5
Section Details – Mullions 12.6
Divided Lite Options 12.7
Measurement Information 12.8
Installation Suggestions 12.10

ATTENTION:

- Specifications and technical data are subject to change without notice.
- Allow 1/16″ (1.59 mm) tolerance on all measurements.
- For answers to technical questions about Integrity products you may call our Integrity Support Line: 1–800–587–2712.
- Website: www.integritywindows.com

ALL ULTREX POLYGON

UNIT FEATURES

FRAME:

The frame is made of Ultrex®, an advanced fiber reinforced material that is exceptionally resistant to thermal conductance. Ultrex patented coating system meets all the requirements of AAMA 623-10. Exterior coating shall meet AAMA 623–10 and 00022716 in stone white, pebble gray, bronze, evergreen, cashmere and ebony. Interior color coatings shall meet 00022716 in stone white. Composite frame thickness is 1 23/32″ (44 mm). Frame width is 3 3/32″ (79 mm). Ultrex wall is .065″ – .070″ (2 mm) thick.

JAMB EXTENSION:

2″ (51 mm) is standard. 4 9/16″ (116 mm) and 6 9/16″ (167 mm) maintenance free jamb extension available.

INSTALLATION:

Factory applied folding nailing fin. Optional through jamb installation method with brackets available on Direct Glaze Rectangles only. Factory supplied field mulling kits are available.

GLAZING:

All units are manufactured with a 7/8″ (22mm) IG with LoĒ2–272®, LoĒ3–366® or LoĒ–180™ coatings including argon gas fill. Tempered glass and/or obscure glass are available as an option. All glass is of a select quality complying with ASTM C 1036. Insulating glass is manufactured and tested to pass level ASTM E 2190 and is IGCC certified. The glazing seal is a silicone bedding on both interior and exterior surfaces utilized in a sandwich style sash. STC/OITC values are available for 3.1/3.1 standard glass. Optional 3.1/4.7 glass is available. STC and OITC ratings are tested in accordance with ASTM E 90-09. See the Product Performance chapter for values.

RECTANGLES ONLY:

GRILLES–BETWEEN–THE–GLASS (GBG) size limitations may apply:

Interior bar: 11/16″ (17 mm)contoured aluminum bar placed between two pieces of glass. Color: stone white, pebble gray , bronze, evergreen, cashmere or ebony exterior, stone white Interior. Pattern: rectangular or prairie cut. Due to size limitation, 6 or 9 lite Prairie cut may apply. Default is for stand alone units.

Exterior Casing:

Non–integralto the unit. Fastened to the exterior wall with barb and kerf 2″ brick mould as a full surround or with sill nosing. 3 ½″ flat casing available as full surround or with sill nosing. Also available with 1″ ranch style sill and header overhang.

ACCESSORIES:

Field applied: J–channel, a 1″ (25) or a 3″(76) frame expander, or flush fin installation kit. Factory applied: sheet rock return for 1/2″ (13) or 5/8″(16) drywall, a 3/4″ (19) receiver, a frame filler or a flush fin installation kit. General: mull kits are available for field assembly. Kits include instructions, mull covers, mull pugs and brackets.

ALL ULTREX POLYGON

SIZING GUIDELINES / MEASUREMENT CONVERSIONS

MULTIPLE ASSEMBLIES – Factory Mull Configuration.
Field mull kits are available. Mulling beyond limitations is not recommended.
Direct Glaze Units for IFCA, IFAWN, IFDH, IFSH
MAXIMUM ROUGH OPENING ASSEMBLY UP TO 6W1H: 114″ (2896mm) X 78″ (1981mm)
MAXIMUM ROUGH OPENING ASSEMBLY UP TO 5W5H : 96″ (2438mm) X 96″ (2438mm)

Direct Glaze Units for IFGL
MAXIMUM ROUGH OPENING ASSEMBLY UP TO 3W1H: 114″ (2896mm) X 60″ (1524mm)
MAXIMUM ROUGH OPENING ASSEMBLY UP TO 2W2H : 72″ (1829mm) X 78″ (1981mm)

CALCULATING TOTAL ROUGH OPENING FOR ASSEMBLIES: (RECTANGULAR UNITS ONLY)
WIDTH: ADD Frame Widths + 1/2″ (13 mm)
Tolerance = 1/4″ (6mm) from frame to Rough Opening at left and right jamb.
HEIGHT: ADD Frame Heights + 1/2″ (13 mm)
Tolerance = 1/2″ (13 mm) from Frame to Rough Opening at head jamb.
MAXIMUM UNIT R.O.: 114″ (2896 mm) in width or height not to exceed 49 square feet of rough opening.
MINIMUM UNIT R.O. SIZE: Width: 12″ (305 mm) Height: 12″ (305 mm).
MINIMUM SHORT LEG R.O.: 8″ (203 mm) for P4–5, P4–6, P5–1.
MINIMUM P8–1 R.O.: 18″ (457 mm).

INTEGRITY ALL ULTREX SERIES DIRECT GLAZE POLYGON MEASUREMENT CONVERSION FACTORS				
UNIT	**WIDTH**		**HEIGHT**	
Frame Measurements				
Rough Opening to OM of J–channel	+ 3/4″	+ 19mm	+ 3/4″	+ 19mm
Rough Opening to Frame OM	– 1/2″	– 13 mm	– 1/2″	– 13 mm
Glass				
Rough Opening to Glass Size	– 2 3/4″	– 70 mm	– 2 3/4″	– 70 mm
Glass Size to Daylight Opening	– 1 7/32″	– 31 mm	– 1 7/32″	– 31 mm
Rough Opening to Daylight Opening (from exterior)	– 3 15/16″	– 100 mm	– 3 15/16″	– 100 mm
Rough Opening to Masonry Opening	0″	0″	– 1/4″	– 6 mm

ALL ULTREX POLYGON

SECTION DETAILS – 2″, 4 9/16″, and 6 9/16″ Jambs Not to scale

DIRECT GLAZE – 2″

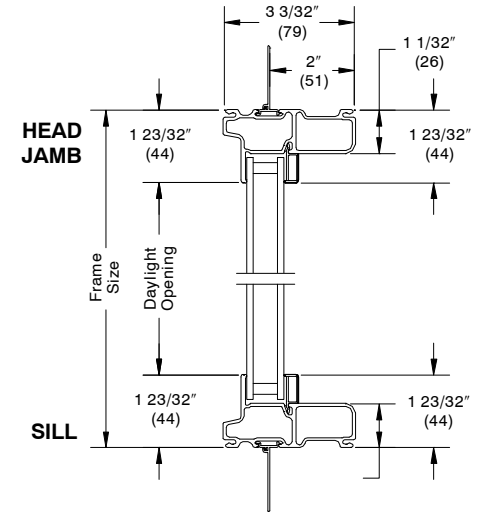

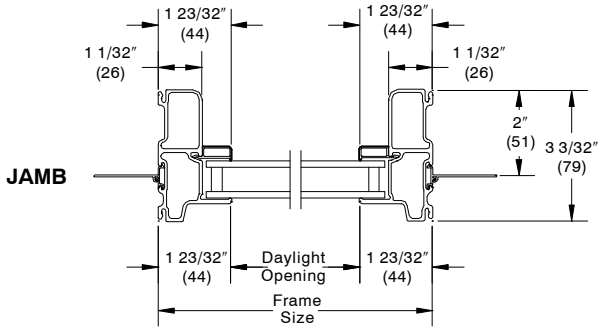

DIRECT GLAZE – 4 9/16″

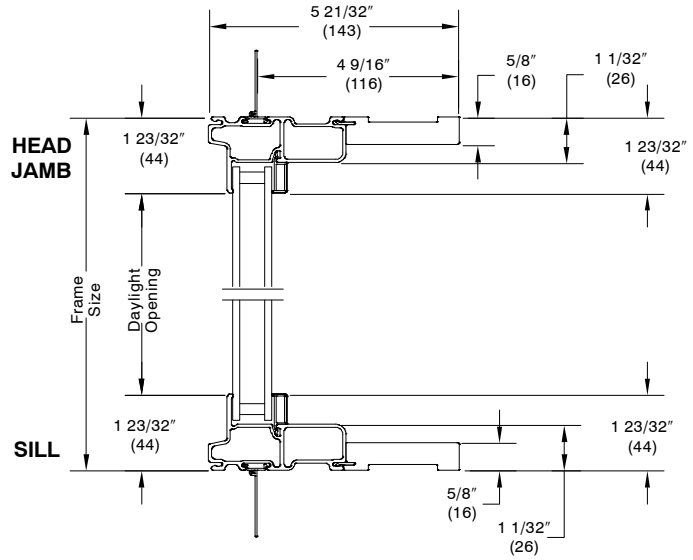

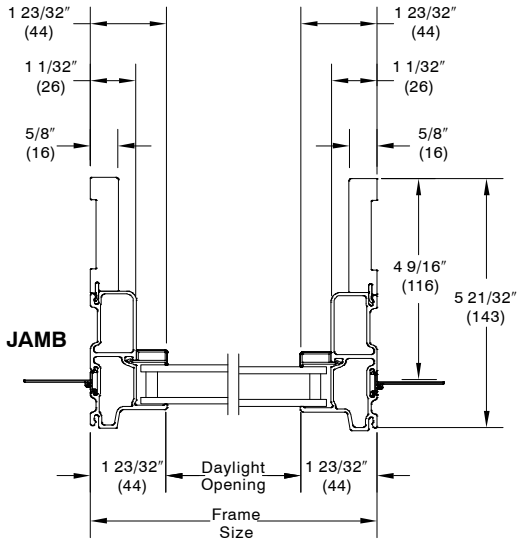

DIRECT GLAZE – 6 9/16″

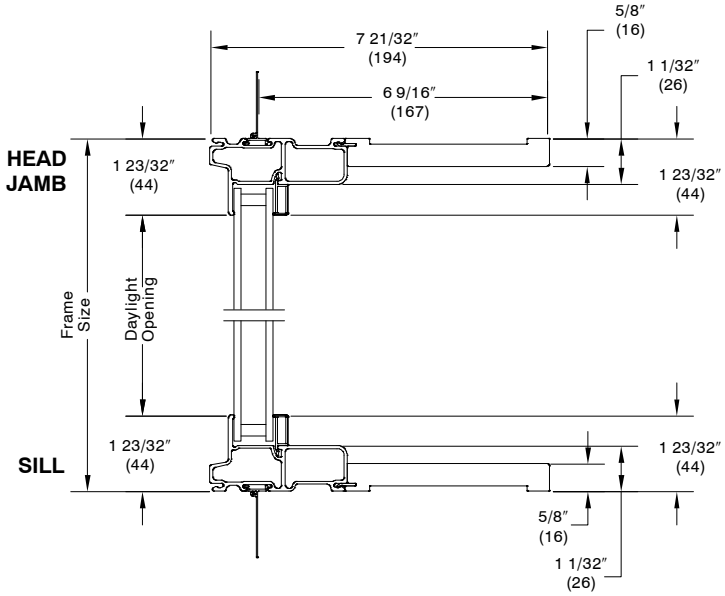

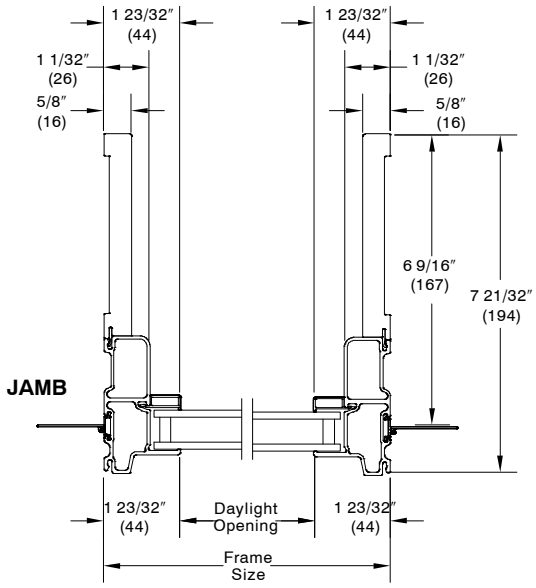

ALL ULTREX POLYGON

SECTION DETAILS – 3 3/8″, 4 9/16″, and 6 9/16″ Jambs Not to scale

IFSPDDG DIRECT GLAZE – 3 3/8″

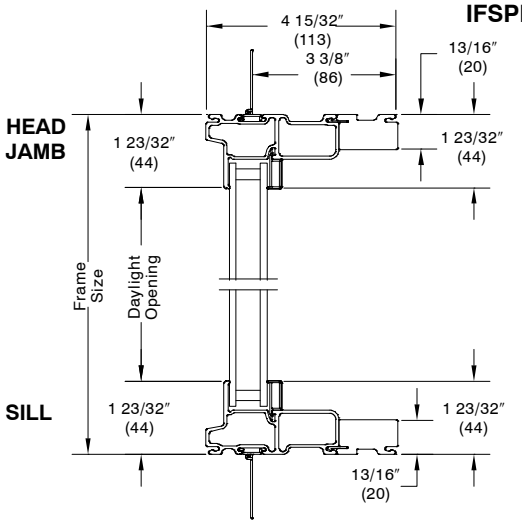

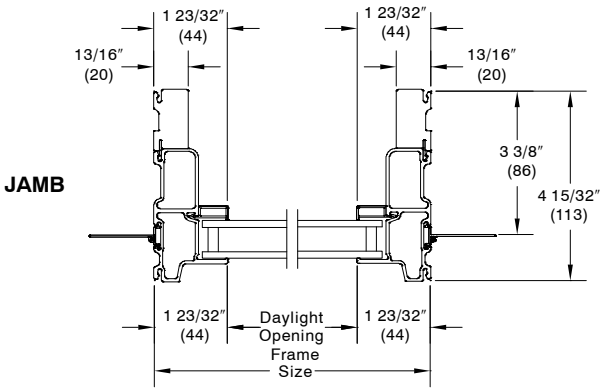

IFSPDDG – DIRECT GLAZE – 4 9/16″

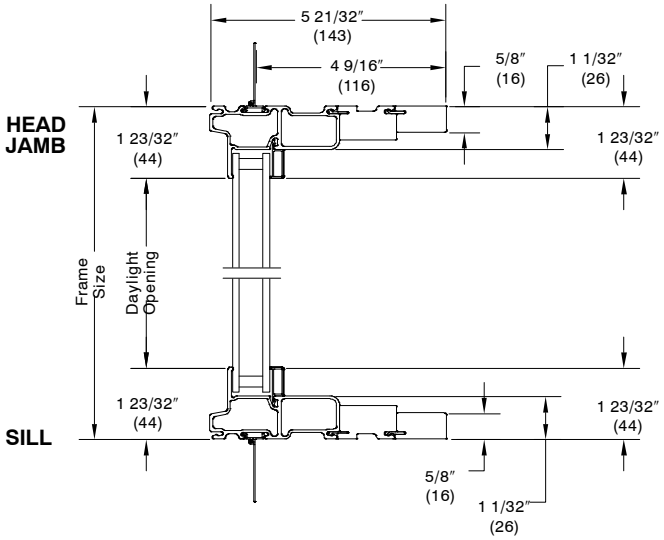

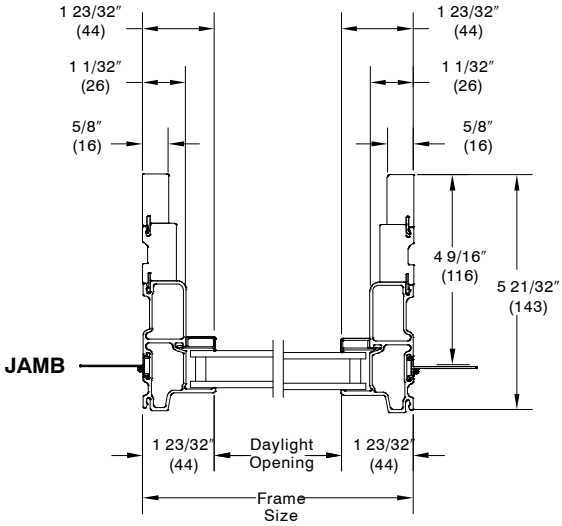

IFSPDDG DIRECT GLAZE – 6 9/16″

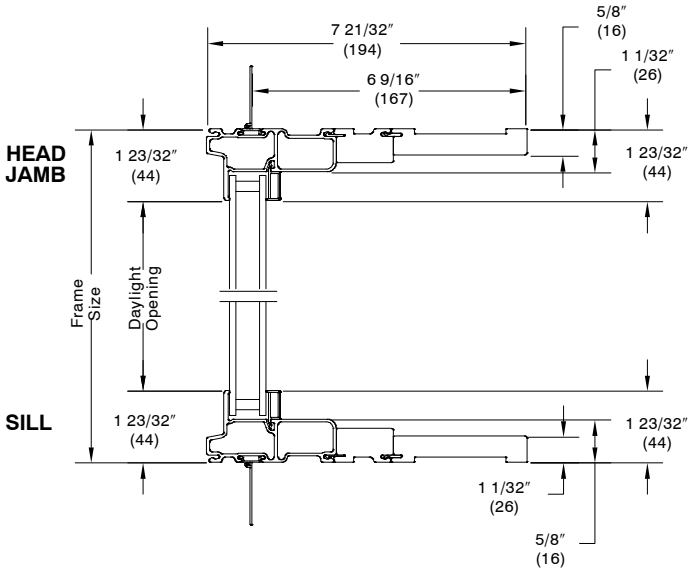

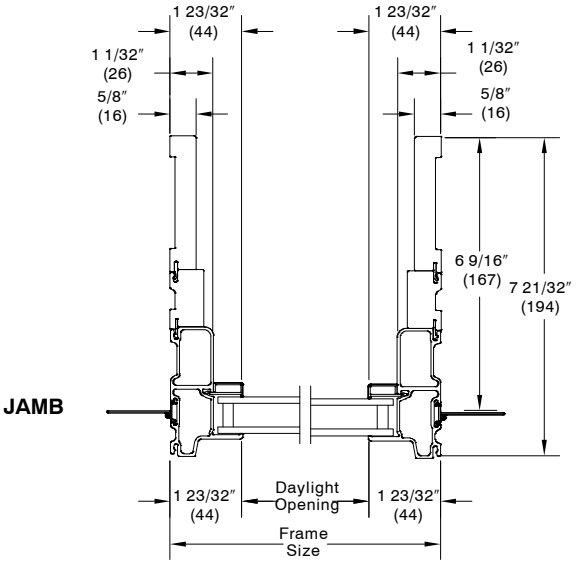

HORIZONTAL MULLIONS

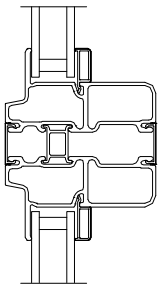

DIRECT GLAZE POLYGON/TRANSOM OVER DIRECT GLAZE POLYGON

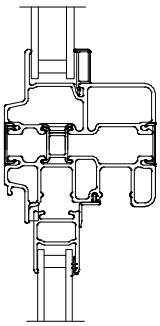

DIRECT GLAZE POLYGON OVER SINGLE HUNG

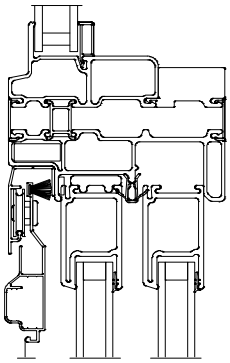

DIRECT GLAZE POLYGON/TRANSOM OVER PATIO DOOR

VERTICAL MULLIONS

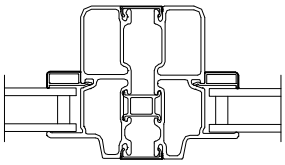

DIRECT GLAZE POLYGON TO DIRECT GLAZE POLYGON

ALL ULTREX POLYGON

DIRECT GLAZE RECTANGLE CASEMENT/AWNING

ALUMINUM GRILLE BETWEEN GLASS
(AVAILABLE IN RECTANGLES ONLY)

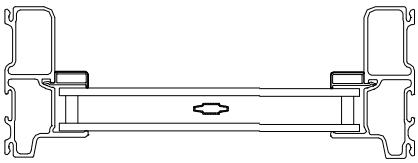

* Special size direct glaze rectangles with prairie GBG will default to 4″ daylight opening (DLO) corners may not align with standard unit prairie cuts unless specified at the time of order. Contact your Integrity representative for more information.

* Special size direct glaze guidelines:

Prairie Lite Cuts					
Lite Cut	Minimum DLO	Maximum		Minimum	
		RO Width	RO Height	RO Width	RO Height
GBG					
9–Lite	4″	85 1/4″	85 1/4″	>24″	> 24″
6–Lite Top	4″	85 1/4″	24″	16″	16″
6–Lite LH or RH	4″	24″	85 1/4″	16″	16″

GBG

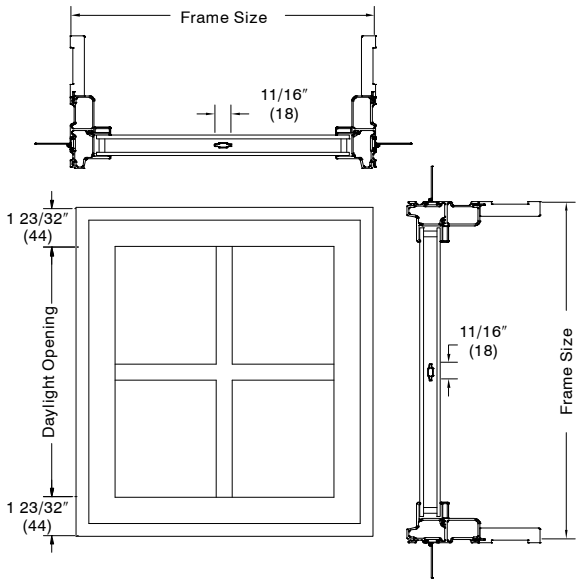

NOTE: Only rectangle shape polygons are available with GBG

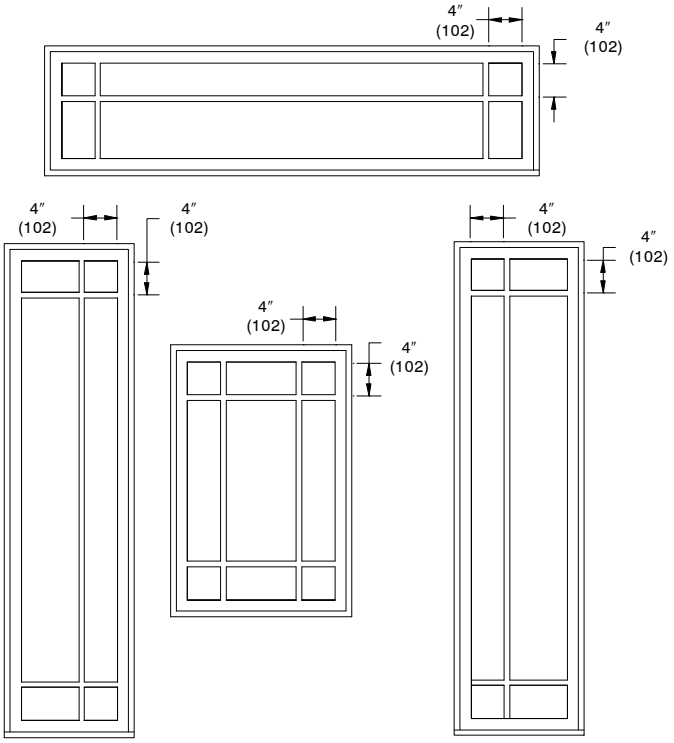

Conversion Formula:

$$\frac{\text{Total DLO} - \text{Total bar width}}{\text{Number of lites}} = \text{Individual DLO}$$

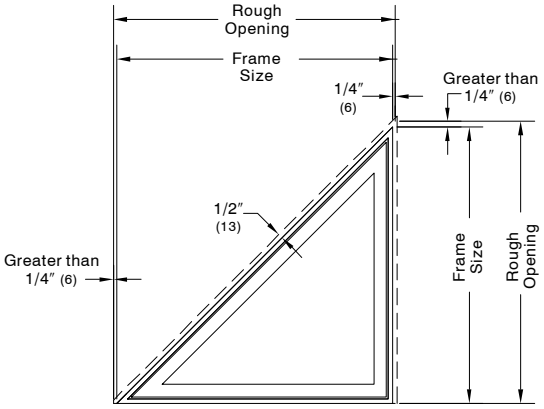

SPECIAL ANGULAR SHAPE UNIT

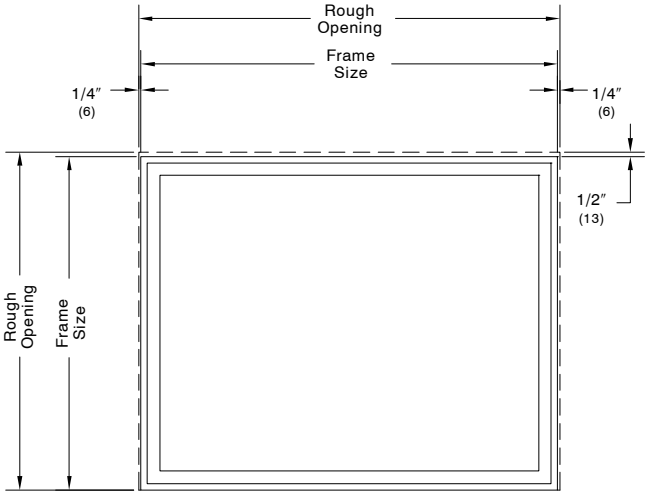

RECTANGULAR UNIT

Note:

On all units, we maintain our clearance or conversion dimension perpendicular to the frame. For this reason, standard rectangular conversions cannot be used for any unit involving angles. These must be calculated on an individual basis. If any dimension is critical (such as frame measurement to match lower unit) then order should be placed with that dimension. The order will be converted to the accurate rough opening. When calculating Angular shapes, contact your Integrity Architectural Representative.

Rough opening tolerance is 1/2″ (13) perpendicular to frame, except on sill.
Masonry opening tolerance is 0″ on width and 1/4″ (6) on height perpendicular to frame, except on sill.

ALL ULTREX POLYGON

MEASUREMENT INFORMATION

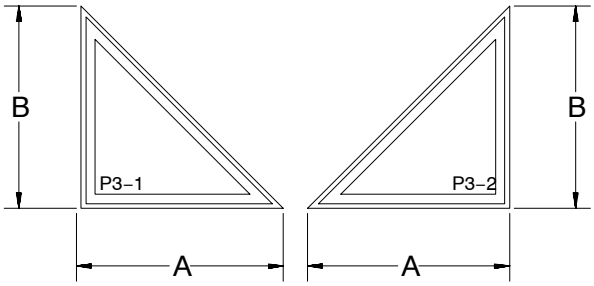

90° TRIANGLE

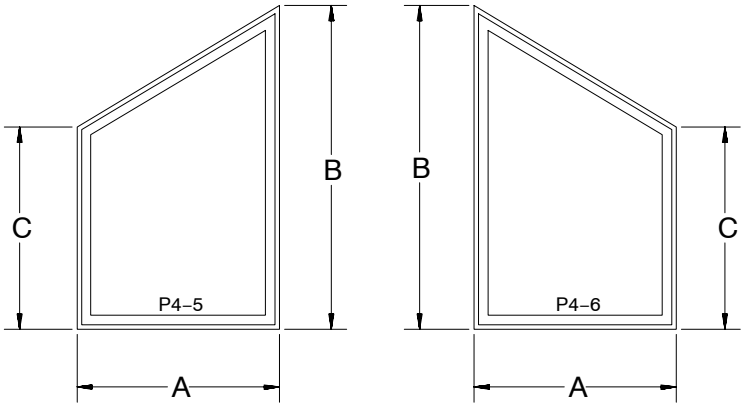

TRAPEZOID

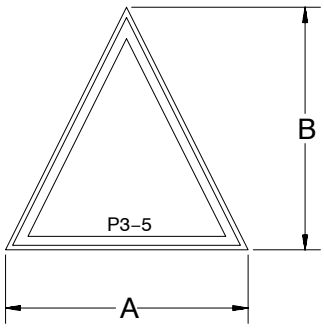

ISOSCELES TRIANGLE

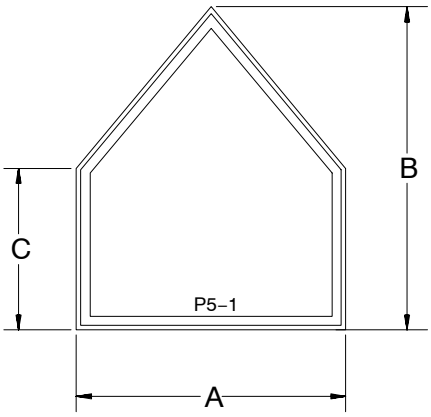

PENTAGON

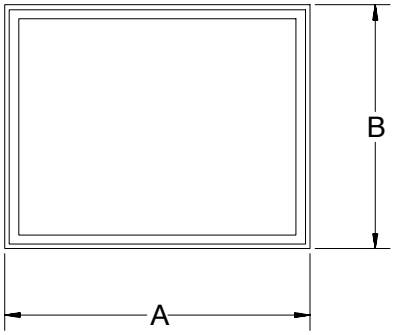

90° RECTANGLE

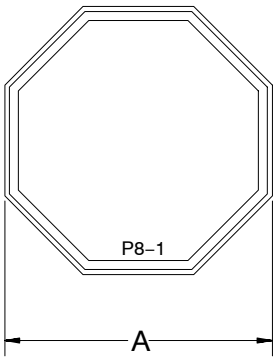

OCTAGON

How to Specify Dimensions:

When ordering a trapezoid, triangle, or rectangle window, provide a sketch of the unit as viewed from the exterior, also include key rough opening dimensions.

Example:

To order a window of a trapezoid opening, provide the measurements of A, B, and C as indicated. For other shapes, give the dimensions shown.

ALL ULTREX POLYGON

INSTALLATION SUGGESTION Scale 3″ = 1′ 0″

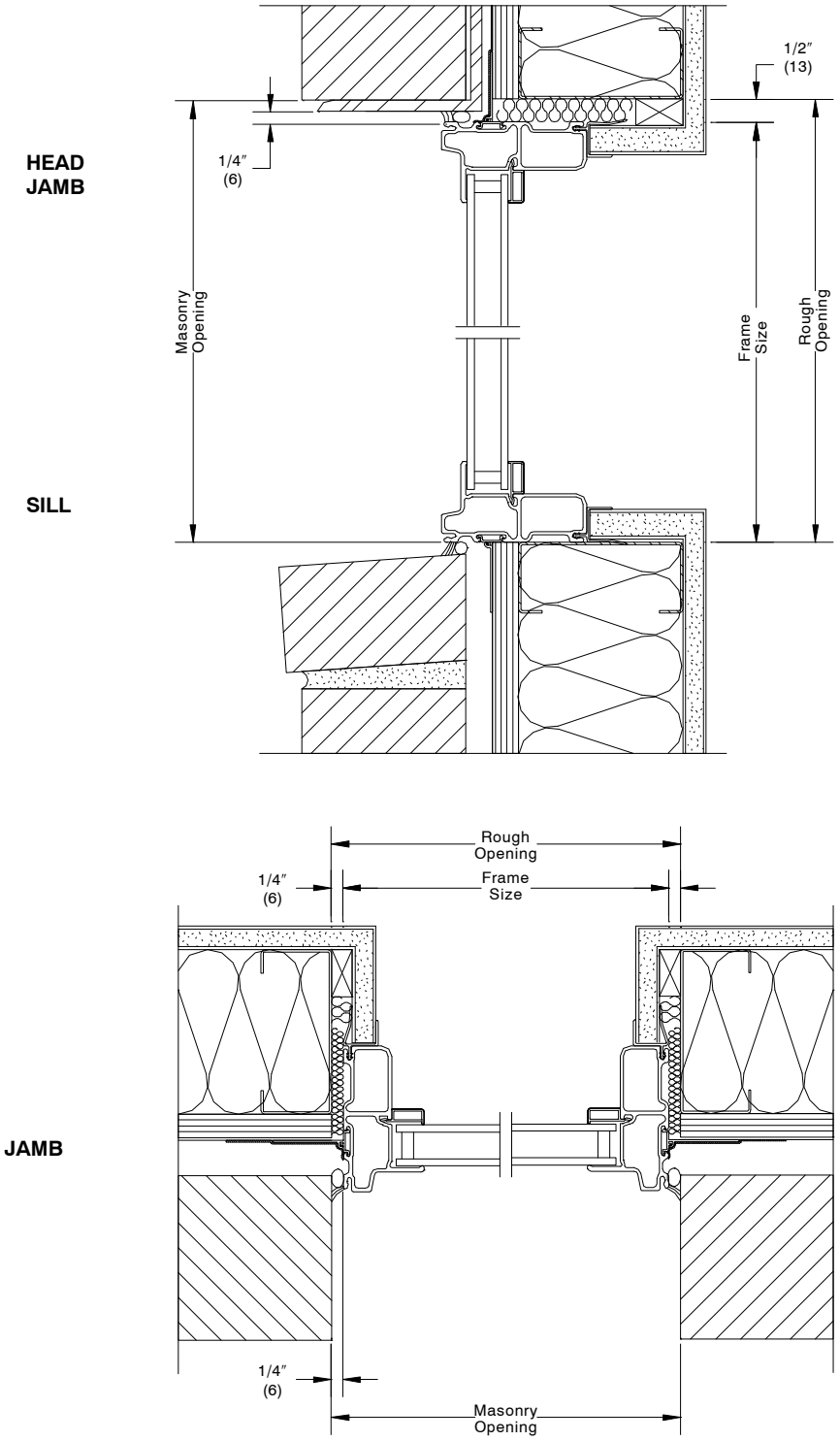

BRICK VENEER WITH STEEL FRAME CONSTRUCTION

NOTE:
Shown with optional sheetrock return.
The above wall sections represent typical wall conditions, these details are not intended as installation instructions. Please refer to the installation instructions provided with the purchased units.

ALL ULTREX POLYGON

INSTALLATION SUGGESTION Scale 3″ = 1′ 0″

HEAD
JAMB

SILL

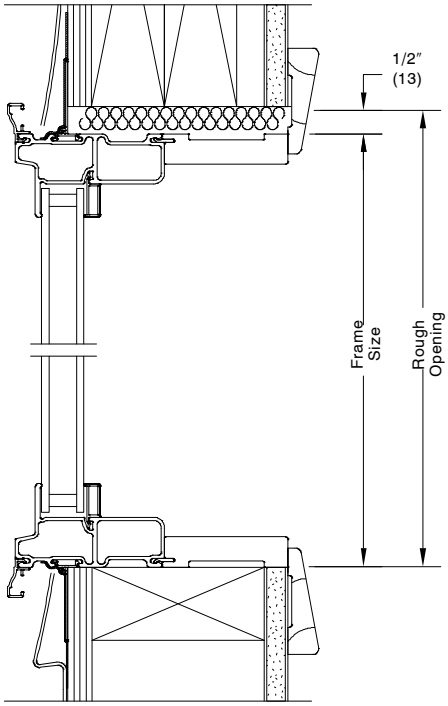

JAMB

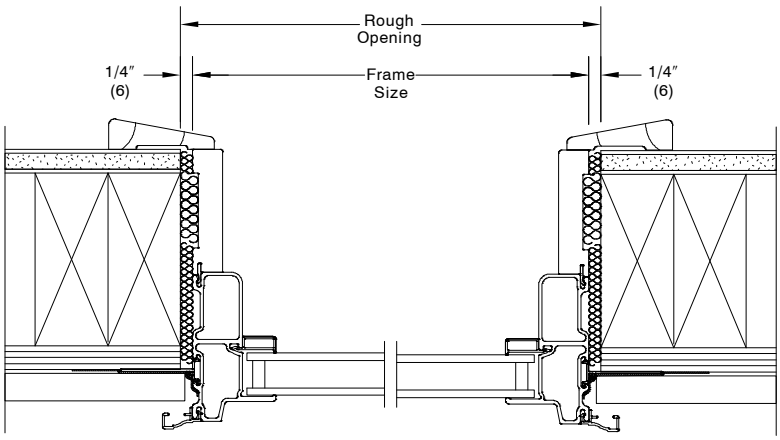

VINYL SIDING WITH 2 X 4 FRAME – 4 9/16″ JAMBS

NOTE:
Shown with optional jamb extension and J–channel.
The above wall sections represent typical wall conditions, these details are not intended as installation instructions. Please refer to the installation instructions provided with the purchased units.

ALL ULTREX POLYGON

INSTALLATION SUGGESTION Scale 3″ = 1′ 0″

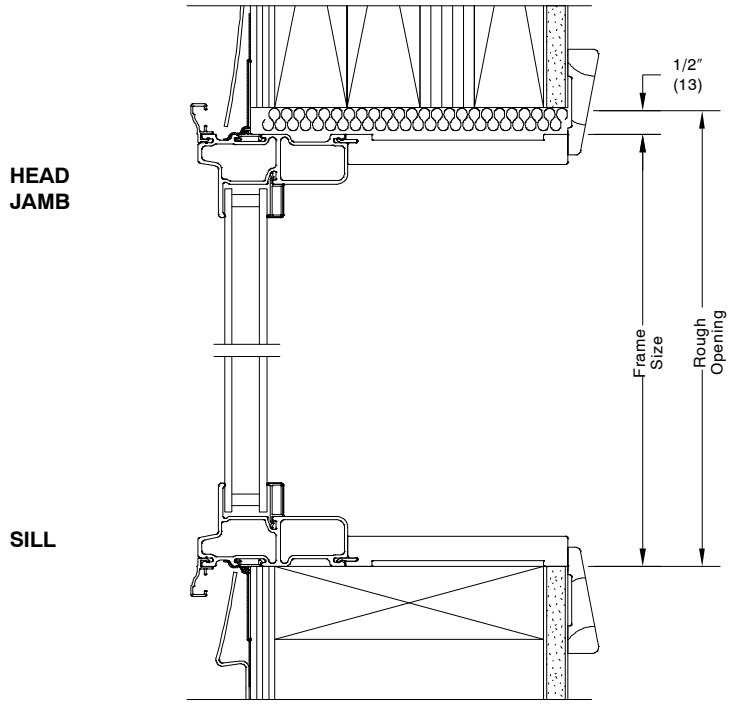

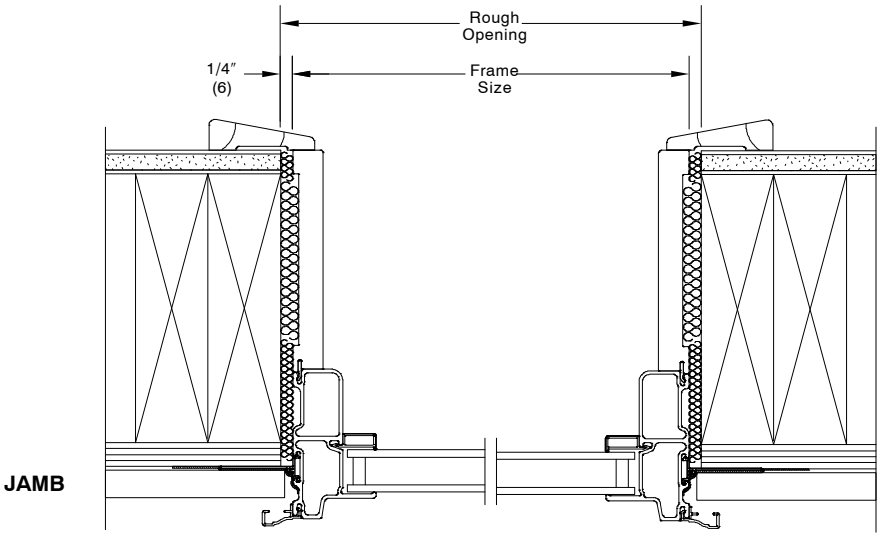

VINYL SIDING WITH 2X6 FRAME CONSTRUCTION

NOTE:
Shown with optional jamb extension and J–channel.
The above wall sections represent typical wall conditions, these details are not intended as installation instructions.
Please refer to the installation instructions provided with the purchased units.

ALL ULTREX POLYGON

INSTALLATION SUGGESTION Scale 3″ = 1′ 0″

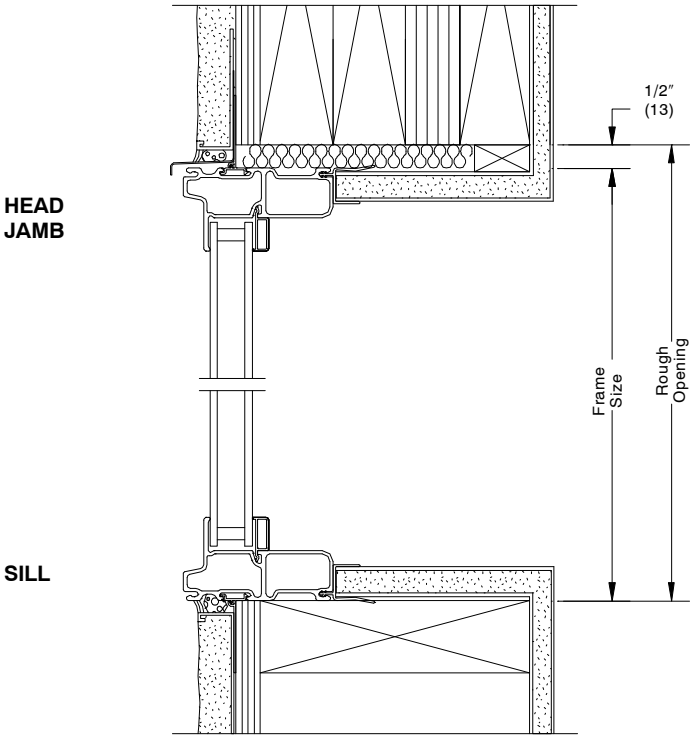

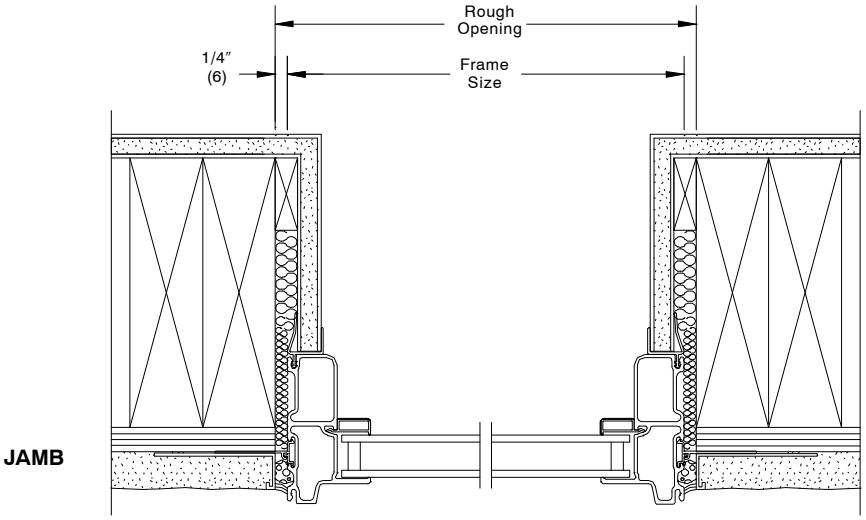

STUCCO WITH 2X6 FRAME CONSTRUCTION

NOTE:
Shown with optional sheetrock return.
The above wall sections represent typical wall conditions, these details are not intended as installation instructions.
Please refer to the installation instructions provided with the purchased units.