CHAPTER 15

INTEGRITY ALL ULTREX SERIES ROUND TOP

Unit Features 15.2
NFRC Values 15.3
Measurement Conversions 15.5
Standard Size Elevations and Lite Pattern 15.6
Section Details and Mulling Guidelines 15.7
Construction Details 15.8

ATTENTION:

- Specifications and technical data are subject to change without notice.
- Allow 1/16″ (1.59 mm) tolerance on all measurements.
- For answers to technical questions about Integrity products you may call our Integrity Support Line: 1–800–587–2712.
- Website: www.integritywindows.com

ALL ULTREX SERIES ROUND TOP

UNIT FEATURES

FRAME:
The frame is made of a glass reinforced composite material. Composite frame depth is 3 3/32, (79). with 2, (51) jamb depth standard. Exterior colors are stone white, pebble gray, bronze, evergreen, cashmere or ebony. Interior color is stone white.

INSTALLATION:
Nailing fin in standard with unit. Optional installation brackets for masonry applications are available. Optional pre–drilled holes for through jamb installation available.

GLAZING:
All units are manufactured with a 11/16″ (17mm) IG with LoĒ^{2}–272®, LoĒ^{3}–366® or LoĒ–180™ coatings including argon gas fill. Tempered glass and/or obscure glass are available as an option. All glass is of a select quality complying with ASTM C 1036. Insulating glass is manufactured and tested to pass level ASTM E 2190 and is IGCC certified. The glazing seal is a silicone bedding on both interior and exterior surfaces utilized in a sandwich style sash. STC/OITC values are available for 3.1/3.1 standard glass. Optional 3.1/4.7 STC/OITC Upgrade glass is available. STC and OITC ratings are tested in accordance with ASTM E 90-09. See the Product Performance chapter for values.

GRILLES–BETWEEN–THE–GLASS:
Interior bar is 11/16″ (17) with interior and exterior color to match unit. Available in closed hub with 3 spokes – 4 lite sunburst pattern.

This page intentionally left blank.
NFRC Values are now located on www.integritywindows.com.

This page intentionally left blank.
NFRC Values are now located on www.integritywindows.com.

INTEGRITY ALL ULTREX ROUND TOP – MEASUREMENT CONVERSION FACTORS				
UNIT	**WIDTH**		**HEIGHT**	
Frame Measurements	**Imperial**	**Metric**	**Imperial**	**Metric**
Rough Opening to Frame OM	–1/2″	– 13 mm	– 1/2″	– 13 mm
Glass				
Rough Opening to Glass Size	–2 3/4″	– 70 mm	–2 3/4″	– 70 mm
Glass Size to Daylight Opening	–1 3/16″	– 30 mm	–1 3/16″	– 30 mm
Rough Opening to Daylight Opening	–3 15/16″	– 100 mm	–3 15/16″	– 100 mm
Rough Opening to Masonry Opening	0	0	– 1/4″	– 6 mm

ALL ULTREX SERIES ROUND TOP

ELEVATIONS Not To Scale

Mas Opg.	2–6	(762)
Rhg Opg.	2–6	(762)
Frame Size	2–5 1/2	(749)
1–3	1–3 1/4	1–2 3/4
(381)	(387)	(451)

IFRT2613

Mas Opg.	2–8	(813)
Rhg Opg.	2–8	(813)
Frame Size	2–7 1/2	(800)
1–4	1–4 1/4	1–3 3/4
(406)	(413)	(400)

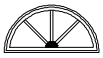

IFRT2814

Mas Opg.	3–0	(914)
Rhg Opg.	3–0	(914)
Frame Size	2–11 1/2	(902)
1–6	1–6 1/4	1–5 3/4
(457)	(464)	(451)

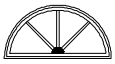

IFRT3016

Mas Opg.	3–6	(1067)
Rhg Opg.	3–6	(1067)
Frame Size	3–5 1/2	(1054)
1–9	1–9 1/4	1–8 3/4
(533)	(540)	(527)

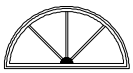

IFRT3619

Mas Opg.	4–0	(1219)
Rhg Opg.	4–0	(1219)
Frame Size	3–11 1/2	(1207)
2–0	2–0 1/4	1–11 3/4
(610)	(616)	(603)

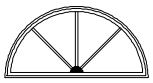

IFRT4020

Mas Opg.	5–0	(1524)
Rhg Opg.	5–0	(1524)
Frame Size	4–11 1/2	(1511)
2–6	2–6 1/4	2–5 3/4
(645)	(768)	(756)

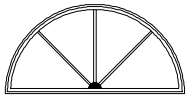

IFRT5026

Mas Opg.	5–4	(1626)
Rhg Opg.	5–4	(1626)
Frame Size	5–3 1/2	(1613)
2–8	2–8 1/4	2–7 3/4
(813)	(819)	(806)

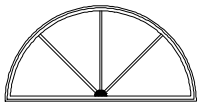

IFRT5428

Mas Opg.	6–0	(1829)
Rhg Opg.	6–0	(1829)
Frame Size	5–11 1/2	(1816)
3–0	3–0 1/4	2–11 3/4
(914)	(921)	(908)

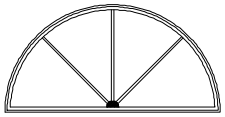

IFRT6030

Mas Opg.	7–0	(2134)
Rhg Opg.	7–0	(2134)
Frame Size	6–11 1/2	(2121)
3–6	3–6 1/4	3–5 3/4
(1067)	(1073)	(1060)

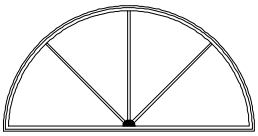

IFRT7036

Mas Opg.	8–0	(2438)
Rhg Opg.	8–0	(2438)
Frame Size	7–11 1/2	(2426)
4–0	4–0 1/4	3–11 3/4
(1219)	(1226)	(1213)

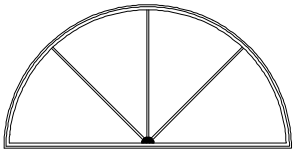

IFRT8040

NOTE:

Units above shown with GBG lite pattern. Units are available with or without GBGs.

All Round Tops are half circle RT1 shapes.

ALL ULTREX SERIES ROUND TOP

SECTION DETAILS AND MULLING GUIDELINES SCALE: 3″ = 1′0″

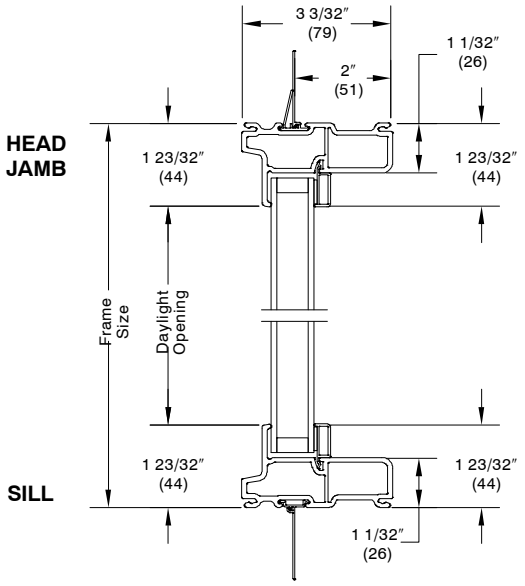

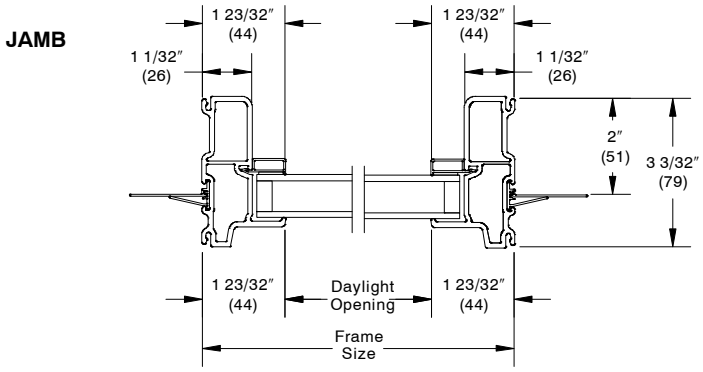

MULLING GUIDELINES

Factory mulled assemblies can be made up of a maximum of 3 units. The upper unit must be equal in width to the lower unit/assembly. Maximum rough opening not to exceed 96″ x 96″ (2438 x 2438).

All mulls are 1/2″ (13) space mulls. Both horizontal and vertical field mull kits are available.

Mulling beyond limitations is not recommended.

MAXIMUM UNIT HALF CIRCLE (RT1): CN 8040 Frame OM 95 1/2″ x 47 3/4″ (2426 x 1213)

MINIMUM UNIT HALF CIRCLE (RT1) : CN 2613 Frame OM 29 1/2″ x 14 3/4″ x (749 x 375)

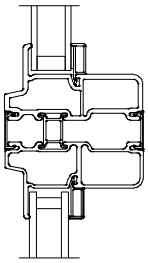

Direct Glaze Round Top over Direct Glaze Polygon

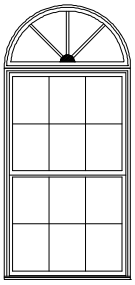

IFRT3016 over IFDH3050

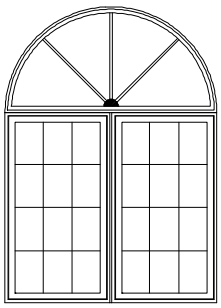

IFRT5026 over IFCA2646–2W

ALL ULTREX SERIES ROUND TOP

CONSTRUCTION DETAILS Scale 3″ = 1′ 0″

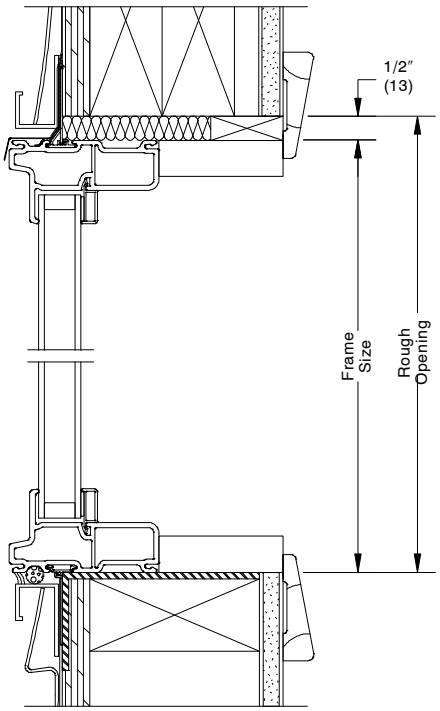

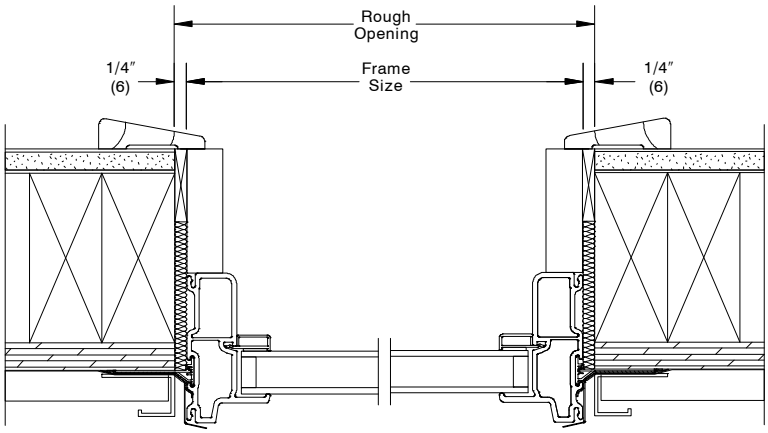

VINYL SIDING WITH 2X4 FRAME CONSTRUCTION

NOTE:
The above wall sections represent typical wall conditions, these details are not intended as installation instructions.
Please refer to the installation instructions provided with the purchased units.

ALL ULTREX SERIES ROUND TOP

CONSTRUCTION DETAILS Scale 3″ = 1′ 0″

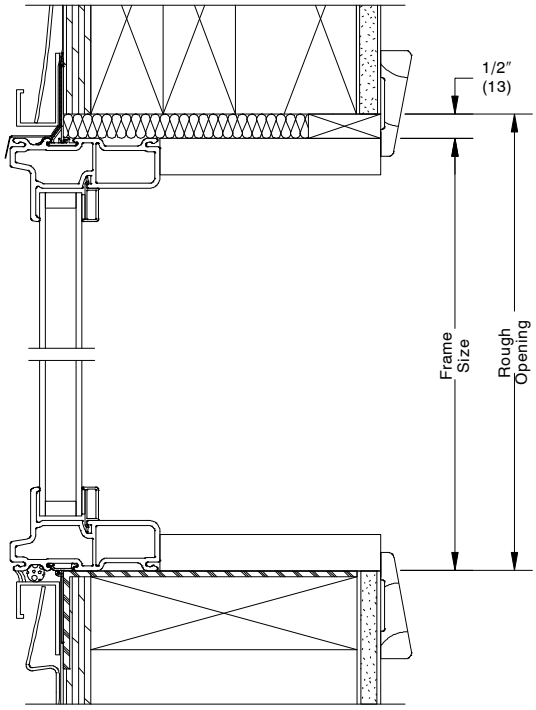

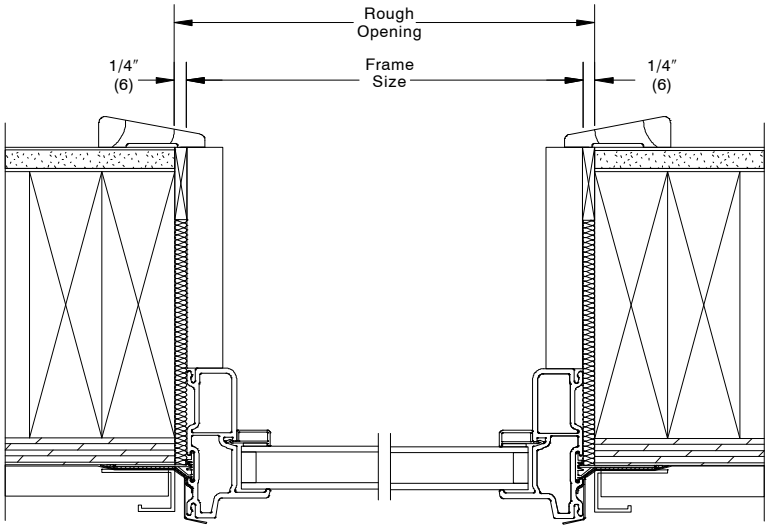

VINYL SIDING WITH 2X6 FRAME CONSTRUCTION

NOTE:
The above wall sections represent typical wall conditions, these details are not intended as installation instructions.
Please refer to the installation instructions provided with the purchased units.

ALL ULTREX SERIES ROUND TOP

CONSTRUCTION DETAILS Scale 3″ = 1′ 0″

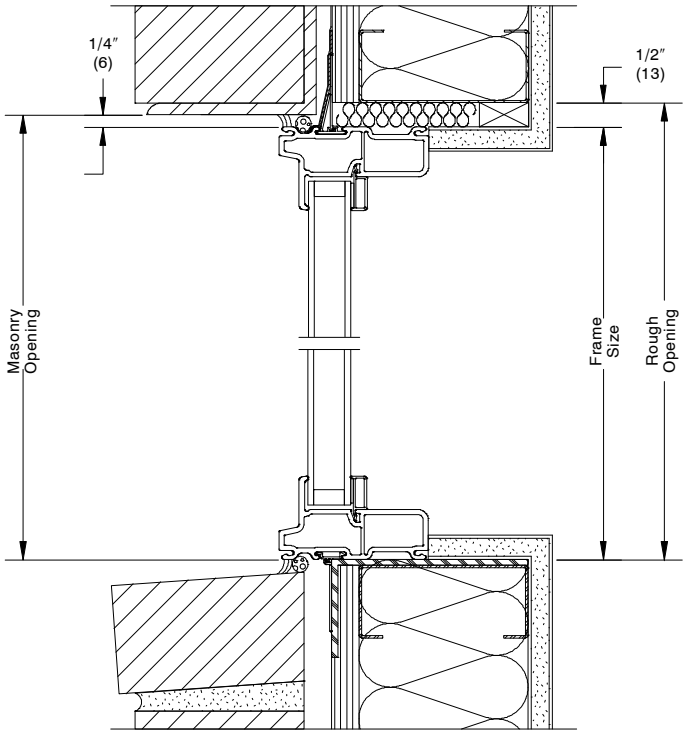

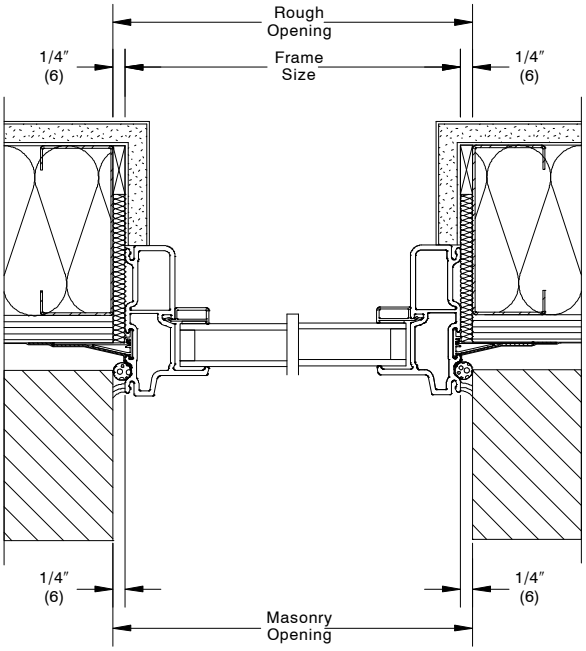

BRICK VENEER WITH STEEL FRAME CONSTRUCTION

NOTE:
The above wall sections represent typical wall conditions, these details are not intended as installation instructions.
Please refer to the installation instructions provided with the purchased units.

ALL ULTREX SERIES ROUND TOP

CONSTRUCTION DETAILS Scale 3″ = 1′ 0″

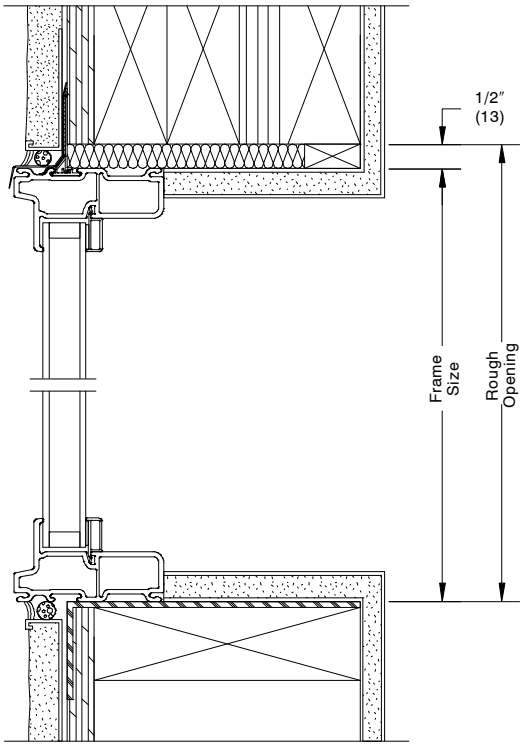

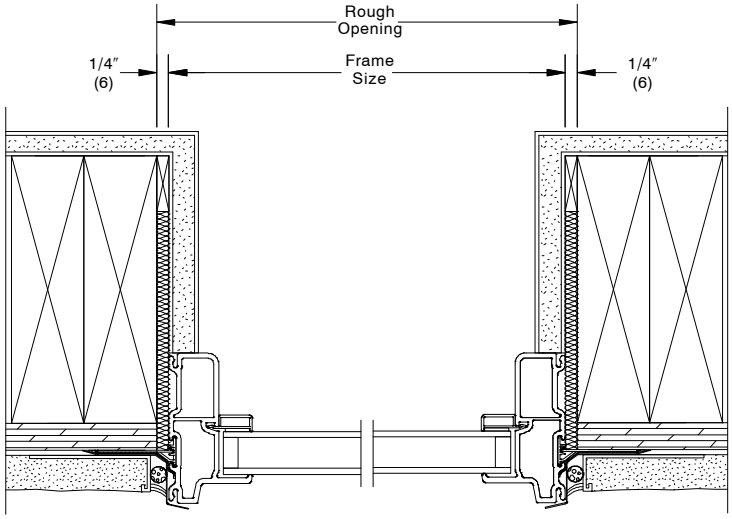

STUCCO WITH 2X4 FRAME CONSTRUCTION

NOTE:
The above wall sections represent typical wall conditions, these details are not intended as installation instructions.
Please refer to the installation instructions provided with the purchased units.