CHAPTER 3

INTEGRITY WOOD–ULTREX DOUBLE HUNG (ITDH)
INTEGRITY WOOD–ULTREX DOUBLE HUNG PICTURE (ITDHP)
INTEGRITY WOOD–ULTREX DOUBLE HUNG TRANSOM (ITDHT)

Unit Features 3.2
Minimum and Maximum Guidelines/Egress Measurements 3.3
Egress, Lite and Vent Measurements – Standard 3.4
Egress, Lite and Vent Measurements – High Performance 3.6
Egress, Lite and Vent Measurements – Impact 3.8
Lite and Vent Measurements – Transom and Picture 3.10
Sizing Guidelines / Measurement Conversions 3.13
Elevations – Double Hung Units 3.14
Elevations – Cottage Units and Transom Units 3.16
Elevations – Picture Units 3.17
Section Details – Operating 3.21
Section Details – Transom / Picture 3.23
Impact Mulling Guidelines 3.25
Section Details – Mullions 3.26
Divided Lite Options 3.27
Available Divided Lite Patterns 3.29
30° Bay Units 3.34
30° Bay Units – Width Dimensions 3.36
45° Bay Units 3.38
45° Bay Units – Width Dimensions 3.40
Installation Suggestions 3.41

ATTENTION:

- Specifications and technical data are subject to change without notice.
- Allow 1/16″ (1.59 mm) tolerance on all measurements.
- Interior mullion trim are shipped loose for field installation.
- For answers to technical questions about Integrity products you may call our Integrity Support Line: 1–800–587–2712.
- Website: www.integritywindows.com

WOOD–ULTREX DOUBLE HUNG

UNIT FEATURES

FRAME:

The frame is made of Ultrex®, an advanced fiber reinforced material that is exceptionally resistant to thermal conductance. Ultrex patented coating system meets all the requirements of AAMA 623-10. Exterior coating shall meet AAMA 623–10 and 00022716 in stone white, pebble gray, bronze, evergreen, cashmere, and ebony. The interior is clear pine, kiln dried to a moisture content of 6–12% at time of fabrication. Water–repellent, preservative treated in accordance with WDMA I.S.4. Composite frame thickness is 1 9/16″ (40 mm). Frame width of 4 9/16″ (116 mm). Flat bottom sill with 13 degree bevel. Clear pine interior frame liner is applied to all units. Interior wood is available as Pine bare wood or factory applied white interior finish. Ultrex is .075″ (2mm) thick. Available in stone white, pebble gray, bronze, evergreen, cashmere, and ebony colors.

SASH:

The sash is made of Ultrex, an advanced fiber reinforced material that is exceptionally resistant to thermal conductance. The interior is clear pine, kiln dried to a moisture content of 6–12% at time of fabrication. Water–repellent, preservative treated in accordance with WDMA I.S.4. Interior wood is available as Pine bare wood or factory applied white interior finish. Composite sash thickness of 1 17/32″ (39 mm). Ultrex is .070″ (2mm) thick. Available in Stone white, pebble gray, bronze, evergreen, cashmere or ebony.

JAMB EXTENSION:

Optional 6 9/16″ (167 mm) and 6 13/16″ (173 mm) jamb extension factory applied or in lineal lengths for field application. ADD 1/4″ to width and 1/8″ to height of frame, rough, and masonry opening sizes.

HARDWARE:

The balance system is a coil spring block and tackle system, with nylon cord and steel locking shoe. Both sash tilt into the room for cleaning or removal for painting without removing the screen. High pressure zinc die cast checkrail lock and keeper. Lock employs a cam–lock mechanism. Color: Almond frost or White. Optional Bright Brass, Oil Rubbed Bronze, and Satin Nickel available. Each sash employs spring loaded tilt latches to allow for easy tilting of sash. On Impact units 32 widths and wider, two locks are mounted.

INSTALLATION:

Factory applied folding nailing fin and drip cap system. Optional structural brackets for masonry available. Optional through jamb installation method with brackets for non-impact units only. Factory supplied field mulling kits are available for standard assemblies or 30° and 45° Bay assemblies. Recommended method for Impact glazed units is installation clips and nailing fin.

GLAZING:

All units are manufactured with an 11/16″ (17mm) IG with LoĒ^2–272®, LoĒ^3–366® or LoĒ–180™ coatings including argon gas fill. Tempered glass and/or obscure glass are available as an option. All glass is of a select quality complying with ASTM C 1036. Insulating glass is manufactured and tested to pass level ASTM E 2190 and is IGCC certified. The glazing seal is a silicone bedding on both interior and exterior surfaces utilized in a sandwich style sash. STC/OITC values are available for 3.1/3.1 standard glass. Optional 3.1/4.7 STC/OITC Upgrade glass is available. STC and OITC ratings are tested in accordance with ASTM E 90-09. See the Product Performance chapter for values.

IMPACT GLAZING:

Optional Impact Zone 3 available on selected sizes. Zone 3 for winds up to 140 miles per hour. Glass is laminated insulated LoĒ^2 272® or LoĒ^3 366® with Argon, consisting of annealed or tempered glass exterior and laminated glass interior. The laminated glass is comprised of two pieces of glass with either a SGP or PVB laminate layer between. Interior and exterior glazing compound is silicone, in a sandwich style glazing system.

WEATHER STRIP:

All weather strip is beige in color. Robust fabric covered foam weather strip is used to seal the double hung jambs. Jamb carrier contains a secondary flexible hollow bulb. Blind stop seal between the header and upper sash. Checkrail weather strip is a hollow bulb. A foam filled weather strip is attached to bottom of sash, interfaces between sill and jamb weather strip. A three dimensional TPE gasket is used between the jamb and sill.

SCREEN:

Rolled formed aluminum frame with corner key construction, color to match exterior Ultrex frame color. Charcoal color fiberglass (non–corrosive) screen cloth. Spring loaded pins for installation.

REMOVABLE INTERIOR GRILLES:

Bar: Pine wood, 3/4″ (19 mm) Available in Pine bare wood or factory applied white finish. Pattern: Standard rectangular pattern.

INTERIOR / EXTERIOR SIMULATED DIVIDED LITES (SDL):

Interior bar: 7/8″ (22 mm) wide bars. Pine bare wood or factory applied white finish, to match interior. Exterior bar: Ultrex, 7/8″ (22 mm) wide bars, finish to match exterior. Patterns available: rectangle, Cottage style cut, 9 lite Prairie cut or 6 lite Prairie for top sash, bottom sash, or both. ITDHP Only: Simulated check rail option: 2 11/32” (60). Pattern available: simulated rail in standard center or customer specified location with 7/8″ patterns above, below or both in patterns of rectangular equal lite or prairie lite cut.

GRILLES–BETWEEN–THE–GLASS (GBG):

11/16″ (17 mm) contoured aluminum bar placed between two panes of glass. Pattern: Standard rectangular pattern, or optional 6 lite per sash Prairie cut on Double Hung or 9 lite on Picture units. Exterior color determined by frame color. White interior. GBGs are not available with Impact glazing.

EXTERIOR CASING:

Non–integral to the unit. Fastened to the exterior wall with barb and kerf 2” brick mould as a full surround or with sill nosing. 3 ½” flat casing available as full surround or with sill nosing. Also available with 1” ranch style sill and header overhang.

NOTE: NFRC Values are now located on www.integritywindows.com

WOOD–ULTREX DOUBLE HUNG

MINIMUM AND MAXIMUM GUIDELINES / EGRESS MEASUREMENTS

Minimum and Maximum Guidelines – Wood Ultrex Double Hung												
Unit Type	Min Size Unit						Max Size Unit					
	CN	in	mm	x	in	mm	CN	in	mm	x	in	mm
ITDH	2236	22 1/2″	(572)	x	36 1/4″	(921)	4276	42 1/2″	(1080)	x	76 1/4″	(1937)
ITDHT	2216	22 1/2″	(572)	x	16 1/4″	(413)	6224	62 1/2″	(1588)	x	24 1/4″	(616)
ITDHP	2224	22 1/2″	(572)	x	24 1/4″	(616)	5476	54 1/2″	(1384)	x	76 1/4″	(1937)
ITDHP	2224	22 1/2″	(572)	x	24 1/4″	(616)	6264	62 1/2″	(1588)	x	64 1/4″	(1632)

Special sizes are available in 1/64″ increments, not to exceed the RO measurement maximum or minimum in the table above.

Egress for Special Sizes			
Minimum Value for Net Clear Opening		Desired Dimension	Formula
20 inches	508 mm	Egress Opening Width (inches)	= Frame OMW – 3.128″
24 inches	610 mm	Egress Opening Height (inches)	= [Frame OMH/2] – 4.675″
5.7 – Square. Feet		Egress Opening Area (Sq. Ft.)	= [Frame Width x Egress Height] / 144

EGRESS MEASUREMENTS

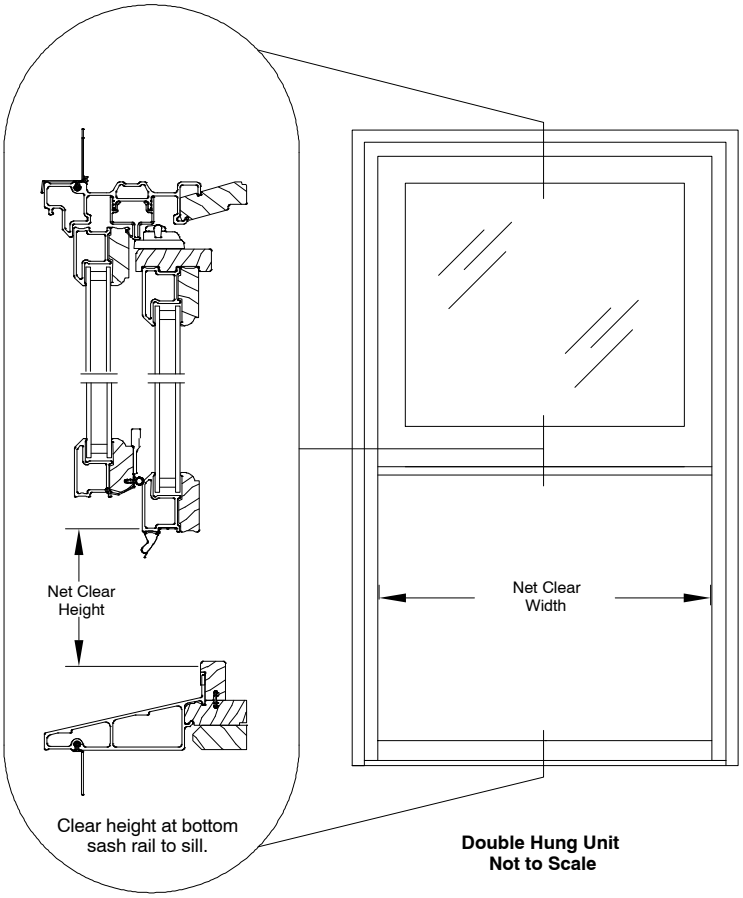

Double Hung Unit Not to Scale

Code restrictions may vary depending on your local building codes.
For additional information contact your local code department for IBC and IRC requirements.

WOOD–ULTREX DOUBLE HUNG

EGRESS, LITE, AND VENT MEASUREMENTS – **STANDARD**

EGRESS, LITE, AND VENT MEASUREMENTS									
UNIT #		DAYLIGHT OPENING WIDTH	DAYLIGHT OPENING HEIGHT	BOTH SASH LITE Sq. ft	VENT Sq. ft	EGRESS WIDTH	EGRESS HEIGHT	EGRESS Sq. ft	FLOOR TO BOTTOM OF CLEAR OPENING**
WOOD–ULTREX DOUBLE HUNG									
ITDH	2236	15 11/16″	13 11/16″	2.98	1.68	18.37	13.2	1.68	48.73
	2240	15 11/16″	15 11/16″	3.42	1.94	18.37	15.2	1.94	44.73
	2244	15 11/16″	17 11/16″	3.85	2.19	18.37	17.2	2.19	40.73
	2248	15 11/16″	19 11/16″	4.29	2.45	18.37	19.2	2.45	36.73
	2252	15 11/16″	21 11/16″	4.73	2.71	18.37	21.2	2.71	32.73
	2256	15 11/16″	23 11/16″	5.16	2.96	18.37	23.2	2.96	28.73
	2260	15 11/16″	25 11/16″	5.60	3.22	18.37	25.2	3.22	24.73
	2264	15 11/16″	27 11/16″	6.03	3.47	18.37	27.2	3.47	20.73
	2268	15 11/16″	29 11/16″	6.47	3.73	18.37	29.2	3.73	16.73
	2272	15 11/16″	31 11/16″	6.90	3.98	18.37	31.2	3.98	12.73
	2276	15 11/16″	33 11/16″	7.34	4.24	18.37	33.2	4.24	8.73
	2636	19 11/16″	13 11/16″	3.74	2.05	22.37	13.2	2.05	48.73
	2640	19 11/16″	15 11/16″	4.29	2.36	22.37	15.2	2.36	44.73
	2644	19 11/16″	17 11/16″	4.84	2.67	22.37	17.2	2.67	40.73
	2648	19 11/16″	19 11/16″	5.38	2.98	22.37	19.2	2.98	36.73
	2652	19 11/16″	21 11/16″	5.93	3.29	22.37	21.2	3.29	32.73
	2656	19 11/16″	23 11/16″	6.48	3.60	22.37	23.2	3.60	28.73
	2660	19 11/16″	25 11/16″	7.02	3.92	22.37	25.2	3.92	24.73
	2664	19 11/16″	27 11/16″	7.57	4.23	22.37	27.2	4.23	20.73
	2668	19 11/16″	29 11/16″	8.12	4.54	22.37	29.2	4.54	16.73
	2672	19 11/16″	31 11/16″	8.66	4.85	22.37	31.2	4.85	12.73
	2676	19 11/16″	33 11/16″	9.21	5.16	22.37	33.2	5.16	8.73
	3036	23 11/16″	13 11/16″	4.50	2.42	26.37	13.2	2.42	48.73
	3040	23 11/16″	15 11/16″	5.16	2.78	26.37	15.2	2.78	44.73
	3044	23 11/16″	17 11/16″	5.82	3.15	26.37	17.2	3.15	40.73
	3048	23 11/16″	19 11/16″	6.48	3.52	26.37	19.2	3.52	36.73
	3052	23 11/16″	21 11/16″	7.14	3.88	26.37	21.2	3.88	32.73
	3056	23 11/16″	23 11/16″	7.79	4.25	26.37	23.2	4.25	28.73
	3060	23 11/16″	25 11/16″	8.45	4.62	26.37	25.2	4.62	24.73
	3064	23 11/16″	27 11/16″	9.11	4.98	26.37	27.2	4.98	20.73
	3068	23 11/16″	29 11/16″	9.77	5.35	26.37	29.2	5.35	16.73
	3072E	23 11/16″	31 11/16″	10.43	5.71	26.37	31.2	5.71	12.73
	3076E	23 11/16″	33 11/16″	11.08	6.08	26.37	33.2	6.08	8.73
	3236	25 11/16″	13 11/16″	4.88	2.60	28.37	13.2	2.60	48.73
	3240	25 11/16″	15 11/16″	5.60	3.00	28.37	15.2	3.0	44.73
	3244	25 11/16″	17 11/16″	6.31	3.39	28.37	17.2	3.39	40.73
	3248	25 11/16″	19 11/16″	7.02	3.78	28.37	19.2	3.78	36.73
	3252	25 11/16″	21 11/16″	7.74	4.18	28.37	21.2	4.18	32.73
	3256	25 11/16″	23 11/16″	8.45	4.57	28.37	23.2	4.57	28.73
	3260	25 11/16″	25 11/16″	9.16	4.97	28.37	25.2	4.97	24.73
	3264	25 11/16″	27 11/16″	10.59	5.36	28.37	27.2	5.36	20.73
	3268E	25 11/16″	29 11/16″	11.31	5.75	28.37	29.2	5.75	16.73
	3272E	25 11/16″	31 11/16″	12.02	6.15	28.37	31.2	6.15	12.73
	3276E	25 11/16″	33 11/16″	4.88	6.54	28.37	33.2	6.54	8.73
	3436	27 11/16″	13 11/16″	5.26	2.78	30.37	13.2	2.78	48.73
	3440	27 11/16″	15 11/16″	6.03	3.21	30.37	15.2	3.21	44.73
	3444	27 11/16″	17 11/16″	6.80	3.63	30.37	17.2	3.63	40.73
	3448	27 11/16″	19 11/16″	7.57	4.05	30.37	19.2	4.05	36.73
	3452	27 11/16″	21 11/16″	8.34	4.47	30.37	21.2	4.47	32.73
	3456	27 11/16″	23 11/16″	9.11	4.89	30.37	23.2	4.89	28.73
	3460	27 11/16″	25 11/16″	9.88	5.32	30.37	25.2	5.32	24.73
	3464E	27 11/16″	27 11/16″	10.65	5.74	30.37	27.2	5.74	20.73
	3468E	27 11/16″	29 11/16″	11.42	6.16	30.37	29.2	6.16	16.73
	3472E	27 11/16″	31 11/16″	12.19	6.58	30.37	31.2	6.58	12.73
	3476E	27 11/16″	33 11/16″	12.95	7.00	30.37	33.2	7.0	8.73

NOTE: E= These units meet national egress codes.

WOOD–ULTREX DOUBLE HUNG

EGRESS. LITE, AND VENT MEASUREMENTS – **STANDARD**

EGRESS, LITE, AND VENT MEASUREMENTS								
UNIT #	DAYLIGHT OPENING WIDTH	DAYLIGHT OPENING HEIGHT	BOTH SASH LITE Sq. ft	VENT Sq. ft	EGRESS WIDTH	EGRESS HEIGHT	EGRESS Sq. ft	FLOOR TO BOTTOM OF CLEAR OPENING**
WOOD–ULTREX DOUBLE HUNG								
3636	29 11/16″	13 11/16″	5.64	2.97	32.37	13.2	2.97	48.73
3640	29 11/16″	15 11/16″	6.47	3.42	32.37	15.2	3.42	44.73
3644	29 11/16″	17 11/16″	7.29	3.87	32.37	17.2	3.87	40.73
3648	29 11/16″	19 11/16″	8.12	4.32	32.37	19.2	4.32	36.73
3652	29 11/16″	21 11/16″	8.94	4.77	32.37	21.2	4.77	32.73
3656	29 11/16″	23 11/16″	9.77	5.39	32.37	24.0	5.39	28.73
3660E	29 11/16″	25 11/16″	10.59	5.84	32.37	26.0	5.84	24.73
3664E	29 11/16″	27 11/16″	11.42	6.12	32.37	27.2	6.12	20.73
3668E	29 11/16″	29 11/16″	12.24	6.56	32.37	29.2	6.56	16.73
3672E	29 11/16″	31 11/16″	13.07	7.01	32.37	31.2	7.01	12.73
3676E	29 11/16″	33 11/16″	13.89	7.46	32.37	33.2	7.46	8.73
3836	31 11/16″	13 11/16″	6.02	3.15	34.37	13.2	3.15	48.73
3840	31 11/16″	15 11/16″	6.90	3.63	34.37	15.2	3.63	44.73
3844	31 11/16″	17 11/16″	7.78	4.11	34.37	17.2	4.11	40.73
3848	31 11/16″	19 11/16″	8.66	4.58	34.37	19.2	4.58	36.73
3852	31 11/16″	21 11/16″	9.55	5.06	34.37	21.2	5.06	32.73
3856E	31 11/16″	23 11/16″	10.43	5.73	34.37	24.0	5.73	28.73
3860E	31 11/16″	25 11/16″	11.31	6.21	34.37	26.0	6.21	24.73
3864E	31 11/16″	27 11/16″	12.19	6.49	34.37	27.2	6.49	20.73
3868E	31 11/16″	29 11/16″	13.07	6.97	34.37	29.2	6.97	16.73
3872E	31 11/16″	31 11/16″	13.95	7.45	34.37	31.2	7.45	12.73
3876E	31 11/16″	33 11/16″	14.83	7.93	34.37	33.2	7.93	8.73
4236	35 11/16″	13 11/16″	6.78	3.52	38.37	13.2	3.52	48.73
4240	35 11/16″	15 11/16″	7.78	4.05	38.37	15.2	4.05	44.73
4244	35 11/16″	17 11/16″	8.77	4.58	38.37	17.2	4.58	40.73
4248	35 11/16″	19 11/16″	9.76	5.12	38.37	19.2	5.12	36.73
4252	35 11/16″	21 11/16″	10.75	5.65	38.37	21.2	5.65	32.73
4256E	35 11/16″	23 11/16″	11.74	6.39	38.37	24.0	6.39	28.73
4260E	35 11/16″	25 11/16″	12.73	6.72	38.37	26.2	6.72	24.73
4264E	35 11/16″	27 11/16″	13.72	7.25	38.37	27.2	7.25	20.73
4268E	35 11/16″	29 11/16″	14.72	7.78	38.37	29.2	7.78	16.73
4272E	35 11/16″	31 11/16″	15.71	8.31	38.37	31.2	8.31	12.73
4276E	35 11/16″	33 11/16″	16.70	8.85	38.37	33.2	8.85	8.73
COTTAGE WOOD–ULTREX DOUBLE HUNG								
2268 TOP	15 11/16″	23 11/16″	6.47	3.06	18.37	24.00	3.06	16.73
BTM	15 11/16″	35 11/16″						
2668 TOP	19 11/16″	23 11/16″	8.12	3.73	22.37	24.00	3.73	16.73
BTM	19 11/16″	35 11/16″						
3068 TOP	23 11/16″	23 11/16″	9.77	4.39	26.37	24.00	4.39	16.73
BTM	23 11/16″	35 11/16″						
3268 TOP	25 11/16″	23 11/16″	9.88	4.73	28.37	24.00	4.73	16.73
BTM	25 11/16″	35 11/16″						
3468 TOP	27 11/16″	23 11/16″	11.42	5.06	30.37	24.00	5.06	16.73
BTM	27 11/16″	35 11/16″						
3668 TOP	29 11/16″	23 11/16″	12.24	5.39	32.37	24.00	5.39	16.73
BTM	29 11/16″	35 11/16″						
3868 TOP	31 11/16″	23 11/16″	13.07	5.73	34.37	24.00	5.73	16.73
BTM E	31 11/16″	35 11/16″						
4268 TOP	35 11/16″	23 11/16″	14.72	6.39	38.37	24.00	6.39	16.73
BTM E	35 11/16″	35 11/16″						

NOTE: E= These units meet national egress codes.

EGRESS, LITE, AND VENT MEASUREMENTS – **HIGH PERFORMANCE**

DOUBLE HUNG HIGH PERFORMANCE EGRESS, LITE, AND VENT MEASUREMENTS									
UNIT #		DAYLIGHT OPENING WIDTH (PER SASH)	DAYLIGHT OPENING HEIGHT (PER SASH)	DAYLIGHT OPENING BOTH SASH Sq. ft	VENT Sq. ft	EGRESS WIDTH	EGRESS HEIGHT	EGRESS Sq. ft	FLOOR TO BOTTOM OF CLEAR OPENING**
WOOD–ULTREX DOUBLE HUNG									
ITDH	2236	15 11/16″	13 11/16″	2.98	1.63	18.37	12.75	1.63	49.19
	2240	15 11/16″	15 11/16″	3.42	1.88	18.37	14.75	1.88	45.19
	2244	15 11/16″	17 11/16″	3.85	2.14	18.37	16.75	2.14	41.19
	2248	15 11/16″	19 11/16″	4.29	2.39	18.37	18.75	2.39	37.19
	2252	15 11/16″	21 11/16″	4.73	2.65	18.37	20.75	2.65	33.19
	2256	15 11/16″	23 11/16″	5.16	2.90	18.37	22.75	2.90	29.19
	2260	15 11/16″	25 11/16″	5.60	3.16	18.37	24.75	3.16	25.19
	2264	15 11/16″	27 11/16″	6.03	3.41	18.37	26.75	3.41	21.19
	2268	15 11/16″	29 11/16″	6.47	3.67	18.37	28.75	3.67	17.19
	2272	15 11/16″	31 11/16″	6.90	3.92	18.37	30.75	3.92	13.19
	2276	15 11/16″	33 11/16″	7.34	4.18	18.37	32.75	4.18	9.19
	2636	19 11/16″	13 11/16″	3.74	1.98	22.37	12.75	1.98	49.19
	2640	19 11/16″	15 11/16″	4.29	2.29	22.37	14.75	2.29	45.19
	2644	19 11/16″	17 11/16″	4.84	2.60	22.37	16.75	2.60	41.19
	2648	19 11/16″	19 11/16″	5.38	2.91	22.37	18.75	2.91	37.19
	2652	19 11/16″	21 11/16″	5.93	3.22	22.37	20.75	3.22	33.19
	2656	19 11/16″	23 11/16″	6.48	3.53	22.37	22.75	3.53	29.19
	2660	19 11/16″	25 11/16″	7.02	3.84	22.37	24.75	3.84	25.19
	2664	19 11/16″	27 11/16″	7.57	4.16	22.37	26.75	4.16	21.19
	2668	19 11/16″	29 11/16″	8.12	4.47	22.37	28.75	4.47	17.19
	2672	19 11/16″	31 11/16″	8.66	4.78	22.37	30.75	4.78	13.19
	2676	19 11/16″	33 11/16″	9.21	5.09	22.37	32.75	5.09	9.19
	3036	23 11/16″	13 11/16″	4.50	2.33	26.37	12.75	2.33	49.19
	3040	23 11/16″	15 11/16″	5.16	2.70	26.37	14.75	2.70	45.19
	3044	23 11/16″	17 11/16″	5.82	3.07	26.37	16.75	3.07	41.19
	3048	23 11/16″	19 11/16″	6.48	3.43	26.37	18.75	3.43	37.19
	3052	23 11/16″	21 11/16″	7.14	3.80	26.37	20.75	3.80	33.19
	3056	23 11/16″	23 11/16″	7.79	4.17	26.37	22.75	4.17	29.19
	3060	23 11/16″	25 11/16″	8.45	4.53	26.37	24.75	4.53	25.19
	3064	23 11/16″	27 11/16″	9.11	4.90	26.37	26.75	4.90	21.19
	3068	23 11/16″	29 11/16″	9.77	5.26	26.37	28.75	5.26	17.19
	3072E	23 11/16″	31 11/16″	10.43	5.63	26.37	30.75	5.63	13.19
	3076E	23 11/16″	33 11/16″	11.08	6.00	26.37	32.75	6.00	9.19
	3236	25 11/16″	13 11/16″	5.26	2.51	28.37	12.75	2.51	49.19
	3240	25 11/16″	15 11/16″	6.03	2.91	28.37	14.75	2.91	45.19
	3244	25 11/16″	17 11/16″	6.31	3.30	28.37	16.75	3.30	41.19
	3248	25 11/16″	19 11/16″	7.57	3.69	28.37	18.75	3.69	37.19
	3252	25 11/16″	21 11/16″	8.34	4.09	28.37	20.75	4.09	33.19
	3256	25 11/16″	23 11/16″	9.11	4.48	28.37	22.75	4.48	29.19
	3260	25 11/16″	25 11/16″	9.88	4.88	28.37	24.75	4.88	25.19
	3264	25 11/16″	27 11/16″	10.65	5.27	28.37	26.75	5.27	21.19
	3268	25 11/16″	29 11/16″	11.42	5.66	28.37	28.75	5.66	17.19
	3272E	25 11/16″	31 11/16″	12.19	6.06	28.37	30.75	6.06	13.19
	3276E	25 11/16″	33 11/16″	12.95	6.45	28.37	32.75	6.45	9.19
	3436	27 11/16″	13 11/16″	5.26	2.69	30.37	12.75	2.69	49.19
	3440	27 11/16″	15 11/16″	6.03	3.11	30.37	14.75	3.11	45.19
	3444	27 11/16″	17 11/16″	6.80	3.53	30.37	16.75	3.53	41.19
	3448	27 11/16″	19 11/16″	7.57	3.95	30.37	18.75	3.95	37.19
	3452	27 11/16″	21 11/16″	8.34	4.38	30.37	20.75	4.38	33.19
	3456	27 11/16″	23 11/16″	9.11	4.80	30.37	22.75	4.80	29.19
	3460	27 11/16″	25 11/16″	9.88	5.22	30.37	24.75	5.22	25.19
	3464	27 11/16″	27 11/16″	10.65	5.64	30.37	26.75	5.64	21.19
	3468E	27 11/16″	29 11/16″	11.42	6.06	30.37	28.75	6.06	17.19
	3472E	27 11/16″	31 11/16″	12.19	6.48	30.37	30.75	6.48	13.19
	3476E	27 11/16″	33 11/16″	12.95	6.91	30.37	32.75	6.91	9.19

E= These units meet national egress codes. See notes on following page.

WOOD–ULTREX DOUBLE HUNG

EGRESS. LITE, AND VENT MEASUREMENTS – **HIGH PERFORMANCE**

DOUBLE HUNG HIGH PERFORMANCE EGRESS, LITE, AND VENT MEASUREMENTS								
UNIT #	**DAYLIGHT OPENING WIDTH**	**DAYLIGHT OPENING HEIGHT**	**LITE Sq. ft**	**VENT Sq. ft**	**EGRESS WIDTH**	**EGRESS HEIGHT**	**EGRESS Sq. ft**	**FLOOR TO BOTTOM OF CLEAR OPENING****
WOOD–ULTREX DOUBLE HUNG								
3636	29 11/16″	13 11/16″	5.64	2.87	32.37	12.75	2.87	49.19
3640	29 11/16″	15 11/16″	6.47	3.31	32.37	14.75	3.31	45.19
3644	29 11/16″	17 11/16″	7.29	3.77	32.37	16.75	3.77	41.19
3648	29 11/16″	19 11/16″	8.12	4.21	32.37	18.75	4.21	37.19
3652	29 11/16″	21 11/16″	8.94	4.66	32.37	20.75	4.66	33.19
3656	29 11/16″	23 11/16″	9.77	5.29	32.37	22.75	5.29	29.19
3660E	29 11/16″	25 11/16″	10.59	5.74	32.37	24.75	5.74	25.19
3664E	29 11/16″	27 11/16″	11.42	6.01	32.37	26.75	6.01	21.19
3668E	29 11/16″	29 11/16″	12.24	6.46	32.37	28.75	6.46	17.19
3672E	29 11/16″	31 11/16″	13.07	6.91	32.37	30.75	6.91	13.19
3676E	29 11/16″	33 11/16″	13.89	7.36	32.37	32.75	7.36	9.19
3836	31 11/16″	13 11/16″	6.02	3.04	34.37	12.75	3.04	49.19
3840	31 11/16″	15 11/16″	6.90	3.52	34.37	14.75	3.52	45.19
3844	31 11/16″	17 11/16″	7.78	4.00	34.37	16.75	4.00	41.19
3848	31 11/16″	19 11/16″	8.66	4.47	34.37	18.75	4.47	37.19
3852	31 11/16″	21 11/16″	9.55	4.95	34.37	20.75	4.95	33.19
3856	31 11/16″	23 11/16″	10.43	5.62	34.37	22.75	5.62	29.19
3860E	31 11/16″	25 11/16″	11.31	6.10	34.37	24.75	6.10	25.19
3864E	31 11/16″	27 11/16″	12.19	6.38	34.37	26.75	6.38	21.19
3868E	31 11/16″	29 11/16″	13.07	6.86	34.37	28.75	6.86	17.19
3872E	31 11/16″	31 11/16″	13.95	7.34	34.37	30.75	7.34	13.19
3876E	31 11/16″	33 11/16″	14.83	7.82	34.37	32.75	7.82	9.19
4236	35 11/16″	13 11/16″	6.78	3.40	38.37	12.75	3.40	49.19
4240	35 11/16″	15 11/16″	7.78	3.93	38.37	14.75	3.93	45.19
4244	35 11/16″	17 11/16″	8.77	4.46	38.37	16.75	4.46	41.19
4248	35 11/16″	19 11/16″	9.76	5.00	38.37	18.75	5.00	37.19
4252	35 11/16″	21 11/16″	10.75	5.53	38.37	20.75	5.53	33.19
4256	35 11/16″	23 11/16″	11.74	6.27	38.37	22.75	6.27	29.19
4260E	35 11/16″	25 11/16″	12.73	6.59	38.37	24.75	6.59	25.19
4264E	35 11/16″	27 11/16″	13.72	7.13	38.37	26.75	7.13	21.19
4268E	35 11/16″	29 11/16″	14.72	7.66	38.37	28.75	7.66	17.19
4272E	35 11/16″	31 11/16″	15.71	8.19	38.37	30.75	819	13.19
4276E	35 11/16″	33 11/16″	16.70	8.73	38.37	32.75	8.73	9.19
COTTAGE WOOD–ULTREX DOUBLE HUNG – HIGH PERFORMANCE								
2268 TOP **BTM**	15 11/16″ 15 11/16″	23 11/16″ 35 11/16″	6.47	3.00	18.37	23.54	3.00	17.19
2668 TOP **BTM**	19 11/16″ 19 11/16″	23 11/16″ 35 11/16″	8.12	3.66	22.37	23.54	3.66	17.19
3068 TOP **BTM**	23 11/16″ 23 11/16″	23 11/16″ 35 11/16″	9.77	4.31	26.37	23.54	4.31	17.19
3268 TOP **BTM**	25 11/16″ 25 11/16″	23 11/16″ 35 11/16″	10.59	4.64	28.37	23.54	4.64	17.19
3468 TOP **BTM**	27 11/16″ 27 11/16″	23 11/16″ 35 11/16″	11.42	4.96	30.37	23.54	4.96	17.19
3668 TOP **BTM**	29 11/16″ 29 11/16″	23 11/16″ 35 11/16″	12.24	5.29	32.37	23.54	5.29	17.19
3868 TOP **BTM**	31 11/16″ 31 11/16″	23 11/16″ 35 11/16″	13.07	5.62	34.37	23.54	5.62	17.19
4268 TOP **BTM**	35 11/16″ 35 11/16″	23 11/16″ 35 11/16″	14.72	6.27	38.37	23.54	6.27	17.19

NOTE: E = These units meet national egress codes.

EGRESS, LITE, AND VENT MEASUREMENTS – **IMPACT**

IMPACT DOUBLE HUNG EGRESS, LITE, AND VENT MEASUREMENTS									
UNIT #		DAYLIGHT OPENING WIDTH (PER SASH)	DAYLIGHT OPENING HEIGHT (PER SASH)	DAYLIGHT OPENING BOTH SASH Sq. ft	VENT Sq. ft	EGRESS WIDTH	EGRESS HEIGHT	EGRESS CLEAR OPENING	FLOOR TO BOTTOM OF CLEAR OPENING**
WOOD–ULTREX DOUBLE HUNG									
ITDH	2236	15 11/16″	13 11/16″	2.98	1.63	18.37	12.75	1.63	49.19
	2240	15 11/16″	15 11/16″	3.42	1.88	18.37	14.75	1.88	45.19
	2244	15 11/16″	17 11/16″	3.85	2.14	18.37	16.75	2.14	41.19
	2248	15 11/16″	19 11/16″	4.29	2.39	18.37	18.75	2.39	37.19
	2252	15 11/16″	21 11/16″	4.73	2.65	18.37	20.75	2.65	33.19
	2256	15 11/16″	23 11/16″	5.16	2.90	18.37	22.75	2.90	29.19
	2260	15 11/16″	25 11/16″	5.60	3.16	18.37	24.75	3.16	25.19
	2264	15 11/16″	27 11/16″	6.03	3.41	18.37	26.75	3.41	21.19
	2268	15 11/16″	29 11/16″	6.47	3.67	18.37	28.75	3.67	17.19
	2272	15 11/16″	31 11/16″	6.90	3.92	18.37	30.75	3.92	13.19
	2276	15 11/16″	33 11/16″	7.34	4.18	18.37	32.75	4.18	9.19
	2636	19 11/16″	13 11/16″	3.74	1.98	22.37	12.75	1.98	49.19
	2640	19 11/16″	15 11/16″	4.29	2.29	22.37	14.75	2.29	45.19
	2644	19 11/16″	17 11/16″	4.84	2.60	22.37	16.75	2.60	41.19
	2648	19 11/16″	19 11/16″	5.38	2.91	22.37	18.75	2.91	37.19
	2652	19 11/16″	21 11/16″	5.93	3.22	22.37	20.75	3.22	33.19
	2656	19 11/16″	23 11/16″	6.48	3.53	22.37	22.75	3.53	29.19
	2660	19 11/16″	25 11/16″	7.02	3.84	22.37	24.75	3.84	25.19
	2664	19 11/16″	27 11/16″	7.57	4.16	22.37	26.75	4.16	21.19
	2668	19 11/16″	29 11/16″	8.12	4.47	22.37	28.75	4.47	17.19
	2672	19 11/16″	31 11/16″	8.66	4.78	22.37	30.75	4.78	13.19
	2676	19 11/16″	33 11/16″	9.21	5.09	22.37	32.75	5.09	9.19
	3036	23 11/16″	13 11/16″	4.50	2.33	26.37	12.75	2.33	49.19
	3040	23 11/16″	15 11/16″	5.16	2.70	26.37	14.75	2.70	45.19
	3044	23 11/16″	17 11/16″	5.82	3.07	26.37	16.75	3.07	41.19
	3048	23 11/16″	19 11/16″	6.48	3.43	26.37	18.75	3.43	37.19
	3052	23 11/16″	21 11/16″	7.14	3.80	26.37	20.75	3.80	33.19
	3056	23 11/16″	23 11/16″	7.79	4.17	26.37	22.75	4.17	29.19
	3060	23 11/16″	25 11/16″	8.45	4.53	26.37	24.75	4.53	25.19
	3064	23 11/16″	27 11/16″	9.11	4.90	26.37	26.75	4.90	21.19
	3068	23 11/16″	29 11/16″	9.77	5.26	26.37	28.75	5.26	17.19
	3072	23 11/16″	31 11/16″	10.43	5.63	26.37	30.75	5.63	13.19
	3076E	23 11/16″	33 11/16″	11.08	6.00	26.37	32.75	6.00	9.19
	3236	25 11/16″	13 11/16″	5.26	2.51	28.37	12.75	2.51	49.19
	3240	25 11/16″	15 11/16″	6.03	2.91	28.37	14.75	2.91	45.19
	3244	25 11/16″	17 11/16″	6.31	3.30	28.37	16.75	3.30	41.19
	3248	25 11/16″	19 11/16″	7.57	3.69	28.37	18.75	3.69	37.19
	3252	25 11/16″	21 11/16″	8.34	4.09	28.37	20.75	4.09	33.19
	3256	25 11/16″	23 11/16″	9.11	4.48	28.37	22.75	4.48	29.19
	3260	25 11/16″	25 11/16″	9.88	4.88	28.37	24.75	4.88	25.19
	3264	25 11/16″	27 11/16″	10.65	5.27	28.37	26.75	5.27	21.19
	3268	25 11/16″	29 11/16″	11.42	5.66	28.37	28.75	5.66	17.19
	3272E	25 11/16″	31 11/16″	12.19	6.06	28.37	30.75	6.06	13.19
	3276E	25 11/16″	33 11/16″	12.95	6.45	28.37	32.75	6.45	9.19
	3436	27 11/16″	13 11/16″	5.26	2.69	30.37	12.75	2.69	49.19
	3440	27 11/16″	15 11/16″	6.03	3.11	30.37	14.75	3.11	45.19
	3444	27 11/16″	17 11/16″	6.80	3.53	30.37	16.75	3.53	41.19
	3448	27 11/16″	19 11/16″	7.57	3.95	30.37	18.75	3.95	37.19
	3452	27 11/16″	21 11/16″	8.34	4.38	30.37	20.75	4.38	33.19
	3456	27 11/16″	23 11/16″	9.11	4.80	30.37	22.75	4.80	29.19
	3460	27 11/16″	25 11/16″	9.88	5.22	30.37	24.75	5.22	25.19
	3464	27 11/16″	27 11/16″	10.65	5.64	30.37	26.75	5.64	21.19
	3468	27 11/16″	29 11/16″	11.42	6.06	30.37	28.75	6.06	17.19
	3472E	27 11/16″	31 11/16″	12.19	6.48	30.37	30.75	6.48	13.19
	3476E	27 11/16″	33 11/16″	12.95	6.91	30.37	32.75	6.91	9.19

E= These units meet national egress codes.

WOOD–ULTREX DOUBLE HUNG

EGRESS, LITE, AND VENT MEASUREMENTS – **IMPACT**

IMPACT DOUBLE HUNG EGRESS, LITE, AND VENT MEASUREMENTS								
UNIT #	DAYLIGHT OPENING WIDTH	DAYLIGHT OPENING HEIGHT	LITE Sq. ft	VENT Sq. ft	EGRESS WIDTH	EGRESS HEIGHT	EGRESS Sq. ft	FLOOR TO BOTTOM OF CLEAR OPENING**
WOOD–ULTREX DOUBLE HUNG								
3636	29 11/16″	13 11/16″	5.64	2.87	32.37	12.75	2.87	49.19
3640	29 11/16″	15 11/16″	6.47	3.31	32.37	14.75	3.31	45.19
3644	29 11/16″	17 11/16″	7.29	3.77	32.37	16.75	3.77	41.19
3648	29 11/16″	19 11/16″	8.12	4.21	32.37	18.75	4.21	37.19
3652	29 11/16″	21 11/16″	8.94	4.66	32.37	20.75	4.66	33.19
3656	29 11/16″	23 11/16″	9.77	5.11	32.37	22.75	5.11	29.19
3660	29 11/16″	25 11/16″	10.59	5.56	32.37	24.75	5.56	25.19
3664E	29 11/16″	27 11/16″	11.42	6.01	32.37	26.75	6.01	21.19
3668E	29 11/16″	29 11/16″	12.24	6.46	32.37	28.75	6.46	17.19
3672E	29 11/16″	31 11/16″	13.07	6.91	32.37	30.75	6.91	13.19
3676E	29 11/16″	33 11/16″	13.89	6.35	32.37	28.25	6.35	9.19
3836	31 11/16″	13 11/16″	6.02	3.04	34.37	12.75	3.04	49.19
3840	31 11/16″	15 11/16″	6.90	3.52	34.37	14.75	3.52	45.19
3844	31 11/16″	17 11/16″	7.78	4.00	32.37	16.75	4.00	41.19
3848	31 11/16″	19 11/16″	8.66	4.47	34.37	18.75	4.47	37.19
3852	31 11/16″	21 11/16″	9.55	4.95	34.37	20.75	4.95	33.19
3856	31 11/16″	23 11/16″	10.43	5.43	34.37	22.75	5.43	29.19
3860E	31 11/16″	25 11/16″	11.31	5.91	34.37	24.75	5.91	25.19
3864E	31 11/16″	27 11/16″	12.19	6.38	34.37	26.75	6.38	21.19
3868E	31 11/16″	29 11/16″	13.07	6.86	34.37	28.75	6.86	17.19
3872E	31 11/16″	31 11/16″	13.95	7.34	34.37	30.75	7.34	13.19
3876E	31 11/16″	33 11/16″	14.83	6.74	34.37	28.25	6.74	9.19
4236	35 11/16″	13 11/16″	6.78	3.40	38.37	12.75	3.40	49.19
4240	35 11/16″	15 11/16″	7.78	3.93	38.37	14.75	3.93	45.19
4244	35 11/16″	17 11/16″	8.77	4.46	32.37	16.75	4.46	41.19
4248	35 11/16″	19 11/16″	9.76	5.00	38.37	18.75	5.00	37.19
4252	35 11/16″	21 11/16″	10.75	5.53	38.37	20.75	5.53	33.19
4256	35 11/16″	23 11/16″	11.74	6.06	38.37	22.75	6.06	29.19
4260E	35 11/16″	25 11/16″	12.73	6.59	38.37	24.75	6.59	17.19
4264E	35 11/16″	27 11/16″	13.72	7.13	38.37	26.75	7.13	21.19
4268E	35 11/16″	29 11/16″	14.72	7.66	38.37	28.75	7.66	21.19
COTTAGE WOOD–ULTREX DOUBLE HUNG – IMPACT								
2268 TOP	15 11/16″	23 11/16″	6.47	3.00	18.37	23.54	3.00	17.19
BTM	15 11/16″	35 11/16″						
2668 TOP	19 11/16″	23 11/16″	8.12	3.66	22.37	23.54	3.66	17.19
BTM	19 11/16″	35 11/16″						
3068 TOP	23 11/16″	23 11/16″	9.77	4.31	26.37	23.54	4.31	17.19
BTM	23 11/16″	35 11/16″						
3268 TOP	25 11/16″	23 11/16″	10.59	4.64	28.37	23.54	4.64	17.19
BTM	25 11/16″	35 11/16″						
3468 TOP	27 11/16″	23 11/16″	11.42	4.96	30.37	23.54	4.96	17.19
BTM	27 11/16″	35 11/16″						
3668 TOP	29 11/16″	23 11/16″	12.24	4.10	32.37	18.24	4.10	17.19
BTM	29 11/16″	35 11/16″						
3868 TOP	31 11/16″	23 11/16″	13.07	4.35	34.37	18.24	4.35	17.19
BTM	31 11/16″	35 11/16″						

NOTE: E= These units meet national egress codes.

NOTE: ** These units meet national egress codes requiring 5.7 Sq. ft clear opening, 20″ clear width, and 24″ clear height, not to exceed a floor to sill height of 44″. Code restrictions may vary depending on local building codes. Floor to sill height is calculated using 6–10 1/2″ from finished floor to rough opening header.

LITE MEASUREMENTS FOR TRANSOM AND PICTURE UNITS

LITE MEASUREMENTS FOR TRANSOM AND PICTURE GLAZING				
UNIT #		DAYLIGHT OPENING WIDTH	DAYLIGHT OPENING HEIGHT	LITE Sq. ft
WOOD–ULTREX DOUBLE HUNG TRANSOM				
ITDHTR	**2216**	15 11/16″	9 11/16″	1.06
	2616	19 11/16″	9 11/16″	1.32
	3016	23 11/16″	9 11/16″	1.59
	3216	25 11/16″	9 11/16″	1.73
	3416	27 11/16″	9 11/16″	1.86
	3616	29 11/16″	9 11/16″	2.00
	3816	31 11/16″	9 11/16″	2.13
	4216	35 11/16″	9 11/16″	2.40
	5016	43 11/16″	9 11/16″	2.94
	5416	47 11/16″	9 11/16″	3.21
	6216	55 11/16″	9 11/16″	3.75
	2224	15 11/16″	17 11/16″	1.93
	2624	19 11/16″	17 11/16″	2.42
	3024	23 11/16″	17 11/16″	2.91
	3224	25 11/16″	17 11/16″	3.16
	3624	29 11/16″	17 11/16″	3.65
	3824	31 11/16″	17 11/16″	3.89
	4224	35 11/16″	17 11/16″	4.38
	5024	43 11/16″	17 11/16″	5.37
	5424	47 11/16″	17 11/16″	5.86
	6224	55 11/16″	17 11/16″	6.84
WOOD–ULTREX DOUBLE HUNG PICTURE				
ITDHP	**2224**	15 11/16″	17 11/16″	1.93
	2236	15 11/16″	29 11/16″	3.23
	2240	15 11/16″	33 11/16″	3.67
	2244	15 11/16″	37 11/16″	4.11
	2248	15 11/16″	41 11/16″	4.54
	2252	15 11/16″	45 11/16″	4.98
	2256	15 11/16″	49 11/16″	5.41
	2260	15 11/16″	53 11/16″	5.85
	2264	15 11/16″	57 11/16″	6.28
	2268	15 11/16″	61 11/16″	6.72
	2272	15 11/16″	65 11/16″	7.16
	2276	15 11/16″	69 11/16″	7.59
	2624	19 11/16″	17 11/16″	2.42
	2636	19 11/16″	29 11/16″	4.06
	2640	19 11/16″	33 11/16″	4.61
	2644	19 11/16″	37 11/16″	5.15
	2648	19 11/16″	41 11/16″	5.70
	2652	19 11/16″	45 11/16″	6.25
	2656	19 11/16″	49 11/16″	6.79
	2660	19 11/16″	53 11/16″	7.34
	2664	19 11/16″	57 11/16″	7.89
	2668	19 11/16″	61 11/16″	8.43
	2672	19 11/16″	65 11/16″	8.98
	2676	19 11/16″	69 11/16″	9.53
	3024	23 11/16″	17 11/16″	2.91
	3036	23 11/16″	29 11/16″	4.88
	3040	23 11/16″	33 11/16″	5.54
	3044	23 11/16″	37 11/16″	6.20
	3048	23 11/16″	41 11/16″	6.86
	3052	23 11/16″	45 11/16″	7.52
	3056	23 11/16″	49 11/16″	8.17
	3060	23 11/16″	53 11/16″	8.83
	3064	23 11/16″	57 11/16″	9.49
	3068	23 11/16″	61 11/16″	10.15
	3072	23 11/16″	65 11/16″	10.81
	3076	23 11/16″	69 11/16″	11.46

LITE MEASUREMENTS FOR PICTURE GLAZING			
WOOD–ULTREX DOUBLE HUNG PICTURE			
3224	25 11/16″	17 11/16″	3.16
3236	25 11/16″	29 11/16″	5.30
3240	25 11/16″	33 11/16″	6.01
3244	25 11/16″	37 11/16″	6.72
3248	25 11/16″	41 11/16″	7.44
3252	25 11/16″	45 11/16″	8.15
3256	25 11/16″	49 11/16″	8.86
3260	25 11/16″	53 11/16″	9.58
3264	25 11/16″	57 11/16″	10.29
3268	25 11/16″	61 11/16″	11.00
3272	25 11/16″	65 11/16″	11.72
3276	25 11/16″	69 11/16″	12.43
3424	27 11/16″	17 11/16″	3.40
3436	27 11/16″	29 11/16″	5.71
3440	27 11/16″	33 11/16″	6.48
3444	27 11/16″	37 11/16″	7.25
3448	27 11/16″	41 11/16″	8.02
3452	27 11/16″	45 11/16″	8.78
3456	27 11/16″	49 11/16″	9.55
3460	27 11/16″	53 11/16″	10.32
3464	27 11/16″	57 11/16″	11.09
3468	27 11/16″	61 11/16″	11.86
3472	27 11/16″	65 11/16″	12.63
3476	27 11/16″	69 11/16″	13.40
3624	29 11/16″	17 11/16″	3.65
3636	29 11/16″	29 11/16″	6.12
3640	29 11/16″	33 11/16″	6.95
3644	29 11/16″	37 11/16″	7.77
3648	29 11/16″	41 11/16″	8.59
3652	29 11/16″	45 11/16″	9.42
3656	29 11/16″	49 11/16″	10.24
3660	29 11/16″	53 11/16″	11.07
3664	29 11/16″	57 11/16″	11.89
3668	29 11/16″	61 11/16″	12.72
3672	29 11/16″	65 11/16″	13.54
3676	29 11/16″	69 11/16″	14.37
3824	31 11/16″	17 11/16″	3.89
3836	31 11/16″	29 11/16″	6.53
3840	31 11/16″	33 11/16″	7.41
3844	31 11/16″	37 11/16″	8.29
3848	31 11/16″	41 11/16″	9.17
3852	31 11/16″	45 11/16″	10.05
3856	31 11/16″	49 11/16″	10.93
3860	31 11/16″	53 11/16″	11.81
3864	31 11/16″	57 11/16″	12.69
3868	31 11/16″	61 11/16″	13.57
3872	31 11/16″	65 11/16″	14.46
3876	31 11/16″	69 11/16″	15.34
4224	35 11/16″	17 11/16″	4.38
4236	35 11/16″	29 11/16″	7.36
4240	35 11/16″	33 11/16″	8.35
4244	35 11/16″	37 11/16″	9.34
4248	35 11/16″	41 11/16″	10.33
4252	35 11/16″	45 11/16″	11.32
4256	35 11/16″	49 11/16″	12.31
4260	35 11/16″	53 11/16″	13.30
4264	35 11/16″	57 11/16″	14.30
4268	35 11/16″	61 11/16″	15.29
4272	35 11/16″	65 11/16″	16.28
4276	35 11/16″	69 11/16″	17.27

LITE MEASUREMENTS FOR TRANSOM AND PICTURE UNITS

LITE MEASUREMENTS FOR PICTURE GLAZING			
WOOD–ULTREX DOUBLE HUNG PICTURE			
5024	43 11/16″	17 11/16″	5.37
5036	43 11/16″	29 11/16″	9.01
5040	43 11/16″	33 11/16″	10.22
5044	43 11/16″	37 11/16″	11.43
5048	43 11/16″	41 11/16″	12.65
5052	43 11/16″	45 11/16″	13.86
5056	43 11/16″	49 11/16″	15.07
5060	43 11/16″	53 11/16″	16.29
5064	43 11/16″	57 11/16″	17.50
5068	43 11/16″	61 11/16″	18.72
5072	43 11/16″	65 11/16″	19.93
5076	43 11/16″	69 11/16″	21.14
5424	47 11/16″	17 11/16″	5.86
5436	47 11/16″	29 11/16″	9.83
5440	47 11/16″	33 11/16″	11.16
5444	47 11/16″	37 11/16″	12.48
5448	47 11/16″	41 11/16″	13.81
5452	47 11/16″	45 11/16″	15.13
5456	47 11/16″	49 11/16″	16.45
5460	47 11/16″	53 11/16″	17.78
5464	47 11/16″	57 11/16″	19.10
5468	47 11/16″	61 11/16″	20.42
5472	47 11/16″	65 11/16″	21.75
5476	47 11/16″	69 11/16″	23.08
6224	55 11/16″	17 11/16″	6.84
6236	55 11/16″	29 11/16″	11.48
6240	55 11/16″	33 11/16″	13.03
6244	55 11/16″	37 11/16″	14.57
6248	55 11/16″	41 11/16″	16.12
6252	55 11/16″	45 11/16″	17.67
6256	55 11/16″	49 11/16″	19.21
6260	55 11/16″	53 11/16″	20.76
6264	55 11/16″	57 11/16″	22.31

WOOD–ULTREX DOUBLE HUNG

SIZING GUIDELINES AND MEASUREMENT CONVERSIONS

Multiple assemblies can be factory mulled:

up to 5 units wide by 1 unit high OR 2 unit wide by 2 units high.
MAXIMUM ROUGH OPENING not to exceed 113 1/2″ (2883) X 76 1/4″ (1937)

up to 3 units wide by 5 units high
MAXIMUM ROUGH OPENING not to exceed 84″ (2134)X 92″ (2337)

NOTE: FIELD MULLING BEYOND THE ABOVE LIMITATIONS IS NOT RECOMMENDED

NOTE: ADD 1/4″ to width and 1/8″ to height of frame, rough, and masonry opening sizes 6 9/16″ (167 mm) and 6 13/16″ (173) jamb extension available factory applied or in lineal lengths for field application.

CALCULATING TOTAL ROUGH OPENING FOR ASSEMBLIES

WIDTH: ADD Frame Widths + 1″ (25 mm)

Tolerance = 1/2″ (13 mm) from frame to Rough Opening at left and right jamb.

HEIGHT: ADD Frame Heights + 1/2″ (13 mm)

Tolerance = 1/2″ (13 mm) from Frame to Rough Opening at head jamb.

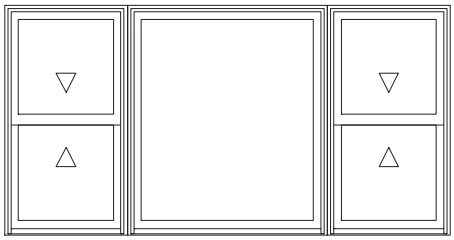

3 Units Wide 1 Unit High

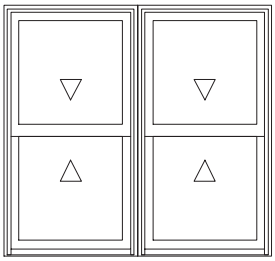

2 Units Wide 1 Unit High

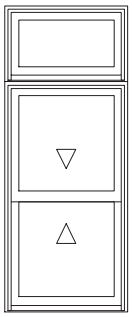

1 Unit Wide
2 Units High

STANDARD MEASUREMENT CONVERSIONS				
Wood–Ultrex Double Hung	**WIDTH**		**HEIGHT**	
Rough Opening to	**Imperial**	**Metric**	**Imperial**	**Metric**
Masonry Opening	– 1/2″	– 13 mm	– 1/4″	– 6 mm
OM of Frame	– 1″	– 25 mm	– 1/2″	– 13 mm
OM Sash	– 3 9/16″	– 90 mm	(÷ 2) – 1 3/16″	(÷ 2) – 30 mm
Daylight Opening	– 6 13/16″	– 173 mm	(÷ 2) – 4 7/16″	(÷ 2) – 113 mm
Om of Glass	– 5 3/4″	– 146 mm	(÷ 2) – 3 3/8″	(÷ 2) – 86 mm
OM of Screen	– 3″	– 76 mm	– 2 1/8″	– 54 mm
PICTURE / TRANSOM				
Masonry Opening	– 1/2″	– 13 mm	– 1/4″	– 6 mm
OM of Frame	– 1″	– 25 mm	– 1/2″	– 13 mm
OM Sash	– 3 9/16″	– 90 mm	– 3 5/16″	– 84 mm
Daylight Opening	– 6 13/16″	– 173 mm	– 6 9/16″	– 167 mm
Om of Glass	– 5 3/4″	– 146 mm	– 5 1/2″	– 140 mm

IMPACT IZ3 MEASUREMENT CONVERSIONS				
Wood–Ultrex Double Hung	**WIDTH**		**HEIGHT**	
Rough Opening to	**Imperial**	**Metric**	**Imperial**	**Metric**
Glass Size	– 5 15/16″	– 151 mm	(÷ 2) – 3 9/16″	(÷ 2) – 90 mm
PICTURE / TRANSOM				
Glass Size	– 5 15/16″	– 151 mm	– 5 11/16″	(÷ 2) – 144 mm

WOOD–ULTREX DOUBLE HUNG

ELEVATIONS – WOOD–ULTREX DOUBLE HUNG UNITS Not To Scale

M.O.	R.O.	F.S.	1–10 (559)	2–2 (660)	2–6 (762)	2–8 (813)	2–10 (864)	3–0 (914)	3–2 (965)	3–6 (1067)
			1–10 1/2 (572)	2–2 1/2 (673)	2–6 1/2 (775)	2–8 1/2 (826)	2–10 1/2 (876)	3–0 1/2 (927)	3–2 1/2 (978)	3–6 1/2 (1080)
			1–9 1/2 (546)	2–1 1/2 (648)	2–5 1/2 (749)	2–7 1/2 (800)	2–9 1/2 (851)	2–11 1/2 (902)	3–1 1/2 (953)	3–5 1/2 (1054)
3–0 (914)	3–0 1/4 (921)	2–11 3/4 (908)	ITDH2236	ITDH2636	ITDH3036	ITDH3236	ITDH3436	ITDH3636	ITDH3836	ITDH4236
3–4 (1016)	3–4 1/4 (1022)	3–3 3/4 (1010)	ITDH2240	ITDH2640	ITDH3040	ITDH3240	ITDH3440	ITDH3640	ITDH3840	ITDH4240
3–8 (1118)	3–8 1/4 (1124)	3–7 3/4 (1111)	ITDH2244	ITDH2644	ITDH3044	ITDH3244	ITDH3444	ITDH3644	ITDH3844	ITDH4244
4–0 (1219)	4–0 1/4 (1226)	3–11 3/4 (1213)	ITDH2248	ITDH2648	ITDH3048	ITDH3248	ITDH3448	ITDH3648	ITDH3848	ITDH4248
4–4 (1321)	4–4 1/4 (1327)	4–3 3/4 (1314)	ITDH2252	ITDH2652	ITDH3052	ITDH3252	ITDH3452	ITDH3652	ITDH3852	ITDH4252
4–8 (1422)	4–8 1/4 (1429)	4–7 3/4 (1416)	ITDH2256	ITDH2656	ITDH3056	ITDH3256	ITDH3456	ITDH3656	ITDH3856	ITDH4256

NOTE: When ordering 6 9/16″ or 6 13/16″ jambs, add 1/4″ to width and 1/8″ to height for Frame Size, Rough Opening and Masonry Opening.

NOTE: E=These windows meet National Egress Codes for fire evacuation. Local codes may differ.

NOTE: Imperial and metric dimensions are shown. Metric dimensions are in millimeters.

NOTE: All units viewed from exterior.

Represents units that are certified for Impact glazing with a wind zone 3.

WOOD–ULTREX DOUBLE HUNG

ELEVATIONS – WOOD–ULTREX DOUBLE HUNG UNITS Not To Scale

M.O. / R.O. / F.S.								
	1–10 (559)	2–2 (660)	2–6 (762)	2–8 (813)	2–10 (864)	3–0 (914)	3–2 (965)	3–6 (1067)
	1–10 1/2 (572)	2–2 1/2 (673)	2–6 1/2 (775)	2–8 1/2 (826)	2–10 1/2 (876)	3–0 1/2 (927)	3–2 1/2 (978)	3–6 1/2 (1080)
	1–9 1/2 (546)	2–1 1/2 (648)	2–5 1/2 (749)	2–7 1/2 (800)	2–9 1/2 (851)	2–11 1/2 (902)	3–1 1/2 (953)	3–5 1/2 (1054)
5–0 (1524) / 5–0 1/4 (1530) / 4–11 3/4 (1518)	ITDH2260	ITDH2660	ITDH3060	ITDH3260	ITDH3460	ITDH3660	ITDH3860E	ITDH4260E
5–4 (1626) / 5–4 1/4 (1632) / 5–3 3/4 (1619)	ITDH2264	ITDH2664	ITDH3064	ITDH3264	ITDH3464	ITDH3664E	ITDH3864E	ITDH4264E
5–8 (2032) / 5–8 1/4 (2038) / 5–7 3/4 (2026)	ITDH2268	ITDH2668	ITDH3068	ITDH3268	ITDH3468	ITDH3668E	ITDH3868E	ITDH4268E
6–0 (1829) / 6–0 1/4 (1835) / 5–11 3/4 (1822)	ITDH2272	ITDH2672	ITDH3072	ITDH3272	ITDH3472E	ITDH3672E	ITDH3872E	ITDH4272E
6–4 (1930) / 6–4 1/4 (1937) / 6–3 3/4 (1924)	ITDH2276	ITDH2676	ITDH3076E	ITDH3276E	ITDH3476E	ITDH3676E	ITDH3876E	ITDH4276E

NOTE: When ordering 6 9/16″ or 6 13/16″ jambs, add 1/4″ to width and 1/8″ to height for Frame Size, Rough Opening and Masonry Opening.

NOTE: E=These windows meet National Egress Codes for fire evacuation. Local codes may differ.

NOTE: Imperial and metric dimensions are shown. Metric dimensions are in millimeters.

NOTE: All units viewed from exterior.

Represents units that are certified for Impact glazing with a wind zone 3.

WOOD–ULTREX DOUBLE HUNG

ELEVATIONS – COTTAGE AND TRANSOM UNITS Not To Scale

COTTAGE STYLE DOUBLE HUNG

M.O.	1–10 (559)	2–2 (660)	2–6 (762)	2–8 (813)	2–10 (864)	3–0 (914)	3–2 (965)	3–6 (1067)
R.O.	1–10 1/2 (572)	2–2 1/2 (673)	2–6 1/2 (775)	2–8 1/2 (826)	2–10 1/2 (876)	3–0 1/2 (927)	3–2 1/2 (978)	3–6 1/2 (1080)
F.S.	1–9 1/2 (546)	2–1 1/2 (648)	2–5 1/2 (749)	2–7 1/2 (800)	2–9 1/2 (851)	2–11 1/2 (902)	3–1 1/2 (953)	3–5 1/2 (1054)

5–8 (1727) / 5–8 1/4 (1734) / 5–7 3/4 (1721)

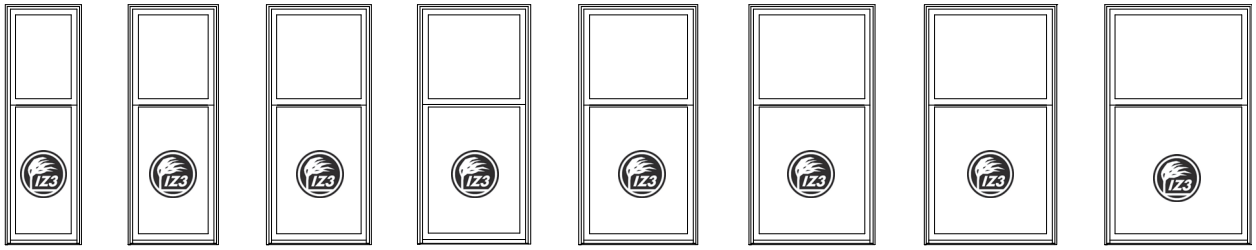

ITDH2268C | ITDH2668C | ITDH3068C | ITDH3268C | ITDH3468C | ITDH3668C | ITDH3868CE | ITDH4268CE

DOUBLE HUNG TRANSOM

	1–10 (559)	2–2 (660)	2–6 (762)	2–8 (813)	2–10 (864)	3–0 (914)	3–2 (965)	3–6 (1067)
	1–10 1/2 (572)	2–2 1/2 (673)	2–6 1/2 (775)	2–8 1/2 (826)	2–10 1/2 (876)	3–0 1/2 (927)	3–2 1/2 (978)	3–6 1/2 (1080)
	1–9 1/2 (546)	2–1 1/2 (648)	2–5 1/2 (749)	2–7 1/2 (800)	2–9 1/2 (851)	2–11 1/2 (902)	3–1 1/2 (953)	3–5 1/2 (1054)

1–4 (406) / 1–4 1/4 (413) / 1–3 3/4 (400)

ITDHTR2216 | ITDHTR2616 | ITDHTR3016 | ITDHTR3216 | ITDHTR3416 | ITDHTR3616 | ITDHTR3816 | ITDHTR4216

2–0 (610) / 2–0 1/4 (616) / 1–11 3/4 (603)

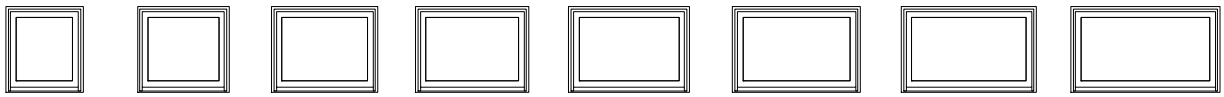

ITDHTR2224 | ITDHTR2624 | ITDHTR3024 | ITDHTR3224 | ITDHTR3424 | ITDHTR3624 | ITDHTR3824 | ITDHTR4224

4–2 (1270)	4–6 (1372)	5–2 (1575)
4–2 1/2 (1283)	4–6 1/2 (1384)	5–2 1/2 (1588)
4–1 1/2 (1257)	4–5 1/2 (1359)	5–1 1/2 (1562)

1–4 (406) / 1–4 1/4 (413) / 1–3 3/4 (400)

ITDHTR5016 | ITDHTR5416 | ITDHTR6216

2–0 (610) / 2–0 1/4 (616) / 1–11 3/4 (603)

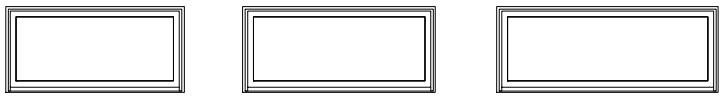

ITDHTR5024 | ITDHTR5424 | ITDHTR6224

NOTE: E=These windows meet National Egress Codes for fire evacuation. Local codes may differ.

NOTE: When ordering 6 9/16″ or 6 13/16″ jambs, add 1/4″ to width and 1/8″ to height for Frame Size, Rough Opening and Masonry Opening.

NOTE: **Light Patterns:** One lite is standard. Rectangular and Prairie Lite Pattern, optional. Size limitations may apply to Prairie lite cut availability. Prairie lite pattern is not available on ITDHTR units.

Represents units that are certified for Impact glazing with a wind zone 3

WOOD–ULTREX DOUBLE HUNG

ELEVATIONS – PICTURE UNITS Not To Scale

M.O. / R.O. / F.S.	1–10 (559) / 1–10 1/2 (572) / 1–9 1/2 (546)	2–2 (660) / 2–2 1/2 (673) / 2–1 1/2 (648)	2–6 (762) / 2–6 1/2 (775) / 2–5 1/2 (749)	2–8 (813) / 2–8 1/2 (826) / 2–7 1/2 (800)	2–10 (864) / 2–10 1/2 (876) / 2–9 1/2 (851)	3–0 (914) / 3–0 1/2 (927) / 2–11 1/2 (902)	3–2 (965) / 3–2 1/2 (978) / 3–1 1/2 (953)	3–6 (1067) / 3–6 1/2 (1080) / 3–5 1/2 (1054)
2–0 (610) / 2–0 1/4 (616) / 1–11 3/4 (603)	ITDHP2224	ITDHP2624	ITDHP3024	ITDHP3224	ITDHP3424	ITDHP3624	ITDHP3824	ITDHP4224
3–0 (914) / 3–0 1/4 (921) / 2–11 3/4 (908)	ITDHP2236	ITDHP2636	ITDHP3036	ITDHP3236	ITDHP3436	ITDHP3636	ITDHP3836	ITDHP4236
3–4 (1016) / 3–4 1/4 (1022) / 3–3 3/4 (1010)	ITDHP2240	ITDHP2640	ITDHP3040	ITDHP3240	ITDHP3440	ITDHP3640	ITDHP3840	ITDHP4240
3–8 (1118) / 3–8 1/4 (1124) / 3–7 3/4 (1111)	ITDHP2244	ITDHP2644	ITDHP3044	ITDHP3244	ITDHP3444	ITDHP3644	ITDHP3844	ITDHP4244
4–0 (1219) / 4–0 1/4 (1226) / 3–11 3/4 (1213)	ITDHP2248	ITDHP2648	ITDHP3048	ITDHP3248	ITDHP3448	ITDHP3648	ITDHP3848	ITDHP4248
4–4 (1321) / 4–4 1/4 (1327) / 4–3 3/4 (1314)	ITDHP2252	ITDHP2652	ITDHP3052	ITDHP3252	ITDHP3452	ITDHP3652	ITDHP3852	ITDHP4252
4–8 (1422) / 4–8 1/4 (1429) / 4–7 3/4 (1416)	ITDHP2256	ITDHP2656	ITDHP3056	ITDHP3256	ITDHP3456	ITDHP3656	ITDHP3856	ITDHP4256

NOTE: When ordering 6 9/16″ or 6 13/16″ jambs, add 1/4″ to width and 1/8″ to height for Frame Size, Rough Opening and Masonry Opening.

NOTE: E=These windows meet National Egress Codes for fire evacuation. Local codes may differ.

NOTE: Imperial and metric dimensions are shown. Metric dimensions are in millimeters.

NOTE: All units viewed from exterior.

Represents units that are certified for Impact glazing with a wind zone 3.

WOOD–ULTREX DOUBLE HUNG

ELEVATIONS – PICTURE UNITS Not To Scale

M.O. / R.O. / F.S.	1–10 (559)	2–2 (660)	2–6 (762)	2–8 (813)	2–10 (864)	3–0 (914)	3–2 (965)	3–6 (1067)
	1–10 1/2 (572)	2–2 1/2 (673)	2–6 1/2 (775)	2–8 1/2 (826)	2–10 1/2 (876)	3–0 1/2 (927)	3–2 1/2 (978)	3–6 1/2 (1080)
	1–9 1/2 (546)	2–1 1/2 (648)	2–5 1/2 (749)	2–7 1/2 (800)	2–9 1/2 (851)	2–11 1/2 (902)	3–1 1/2 (953)	3–5 1/2 (1054)
5–0 (1524) / 5–0 1/4 (1530) / 4–11 3/4 (1518)	ITDHP2260	ITDHP2660	ITDHP3060	ITDHP3260	ITDHP3460	ITDHP3660	ITDHP3860	ITDHP4260
5–4 (1626) / 5–4 1/4 (1632) / 5–3 3/4 (1619)	ITDHP2264	ITDHP2664	ITDHP3064	ITDHP3264	ITDHP3464	ITDHP3664	ITDHP3864	ITDHP4264
5–8 (2032) / 5–8 1/4 (2038) / 5–7 3/4 (2026)	ITDHP2268	ITDHP2668	ITDHP3068	ITDHP3268	ITDHP3468	ITDHP3668	ITDHP3868	ITDHP4268
6–0 (1829) / 6–0 1/4 (1835) / 5–11 3/4 (1822)	ITDHP2272	ITDHP2672	ITDHP3072	ITDHP3272	ITDHP3472	ITDHP3672	ITDHP3872	ITDHP4272
6–4 (1930) / 6–4 1/4 (1937) / 6–3 3/4 (1924)	ITDHP2276	ITDHP2676	ITDHP3076	ITDHP3276	ITDHP3476	ITDHP3676	ITDHP3876	ITDHP4276

WOOD–ULTREX DOUBLE HUNG

ELEVATIONS – PICTURE UNITS Not To Scale

M.O. / R.O. / F.S.	4–2 (1270)	4–6 (1372)	5–2 (1575)
	4–2 1/2 (1283)	4–6 1/2 (1384)	5–2 1/2 (1588)
	4–1 1/2 (1257)	4–5 1/2 (1359)	5–1 1/2 (1562)
2–0 (610) / 2–0 1/4 (616) / 1–11 3/4 (603)	ITDHP5024	ITDHP5424	ITDHP6224
3–0 (914) / 3–0 1/4 (921) / 2–11 3/4 (908)	ITDHP5036	ITDHP5436	ITDHP6236
3–4 (1016) / 3–4 1/4 (1022) / 3–3 3/4 (1010)	ITDHP5040	ITDHP5440	ITDHP6240
3–8 (1118) / 3–8 1/4 (1124) / 3–7 3/4 (1111)	ITDHP5044	ITDHP5444	ITDHP6244
4–0 (1219) / 4–0 1/4 (1226) / 3–11 3/4 (1213)	ITDHP5048	ITDHP5448	ITDHP6248
4–4 (1321) / 4–4 1/4 (1327) / 4–3 3/4 (1314)	ITDHP5052	ITDHP5452	ITDHP6252
4–8 (1422) / 4–8 1/4 (1429) / 4–7 3/4 (1416)	ITDHP5056	ITDHP5456	ITDHP6256

WOOD–ULTREX DOUBLE HUNG

ELEVATIONS – PICTURE UNITS Not To Scale

M.O. / R.O. / F.S.	4–2 (1270)	4–6 (1372)	5–2 (1575)
5–0 (1524) / 5–0 1/4 (1530) / 4–11 3/4 (1518)	ITDHP5060	ITDHP5460	ITDHP6260
5–4 (1626) / 5–4 1/4 (1632) / 5–3 3/4 (1619)	ITDHP5064	ITDHP5464	ITDHP6264
5–8 (21727) / 5–8 1/4 (1734) / 5–7 3/4 (1721)	ITDHP5068	ITDHP5468	
6–0 (1829) / 6–0 1/4 (1835) / 5–11 3/4 (1822)	ITDHP5072	ITDHP5472	
6–4 (1930) / 6–4 1/4 (1937) / 6–3 3/4 (1924)	ITDHP5076	ITDHP5476	

M.O. / R.O. / F.S.	4–2 1/2 (1283)	4–6 1/2 (1384)	5–2 1/2 (1588)
5–0 (1524) / 5–0 1/4 (1530) / 4–11 3/4 (1518)			
5–4 (1626) / 5–4 1/4 (1632) / 5–3 3/4 (1619)			
5–8 (21727) / 5–8 1/4 (1734) / 5–7 3/4 (1721)			
6–0 (1829) / 6–0 1/4 (1835) / 5–11 3/4 (1822)			
6–4 (1930) / 6–4 1/4 (1937) / 6–3 3/4 (1924)			

M.O. / R.O. / F.S.	4–1 1/2 (1257)	4–5 1/2 (1359)	5–1 1/2 (1562)
5–0 (1524) / 5–0 1/4 (1530) / 4–11 3/4 (1518)			
5–4 (1626) / 5–4 1/4 (1632) / 5–3 3/4 (1619)			
5–8 (21727) / 5–8 1/4 (1734) / 5–7 3/4 (1721)			
6–0 (1829) / 6–0 1/4 (1835) / 5–11 3/4 (1822)			
6–4 (1930) / 6–4 1/4 (1937) / 6–3 3/4 (1924)			

WOOD–ULTREX DOUBLE HUNG

SECTION DETAILS: Not to Scale

STANDARD GLAZED

OPERATING – 4 9/16″

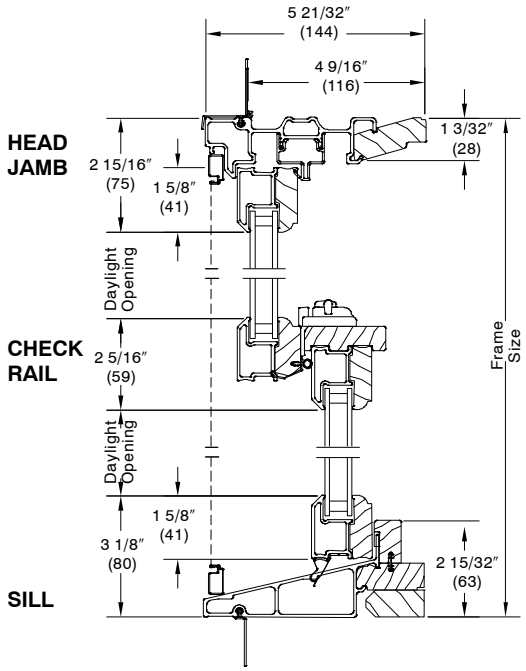

OPERATING – 6 9/16″

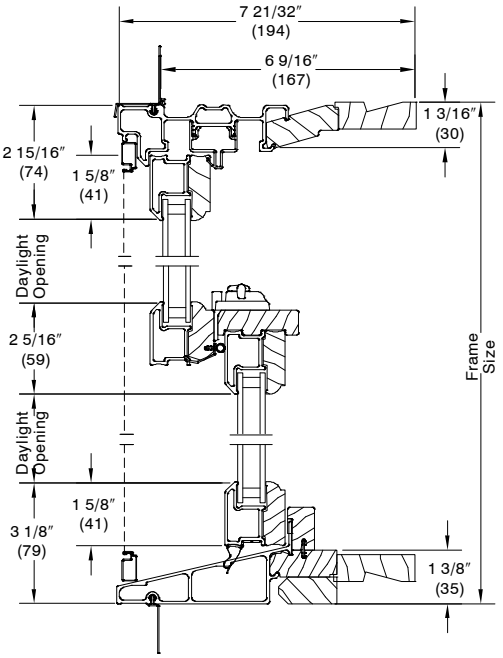

4 9/16″ JAMBS

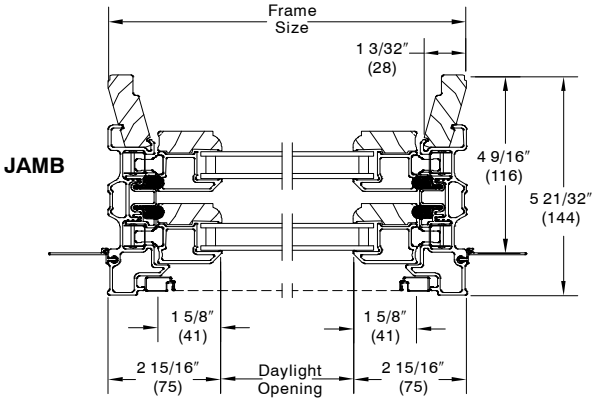

6 9/16″ JAMBS

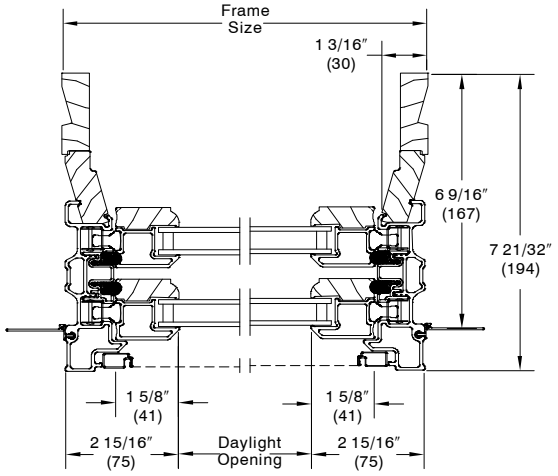

HIGH PERFORMANCE

4 9/16″ JAMBS

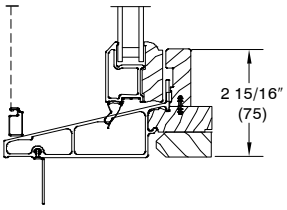

6 9/16″ JAMBS

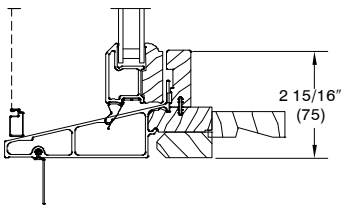

WOOD–ULTREX DOUBLE HUNG

SECTION DETAILS Not to Scale

DOUBLE HUNG – IMPACT UNITS

OPERATING – 4 9/16″

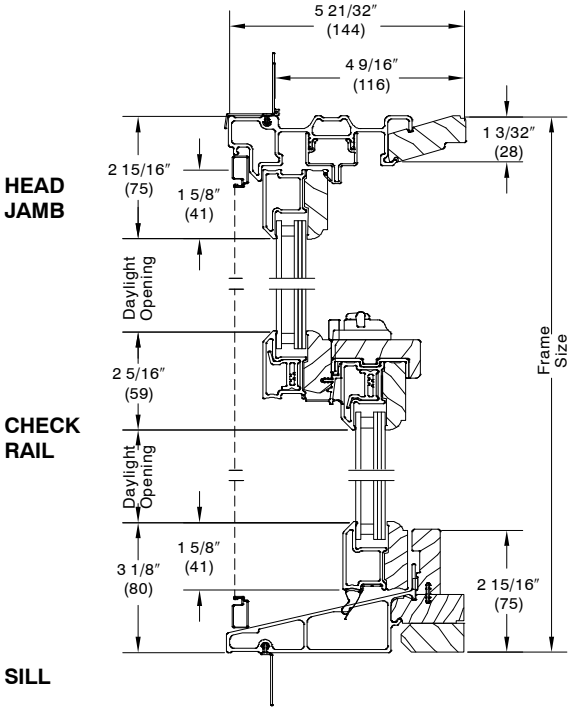

OPERATING – 6 9/16″

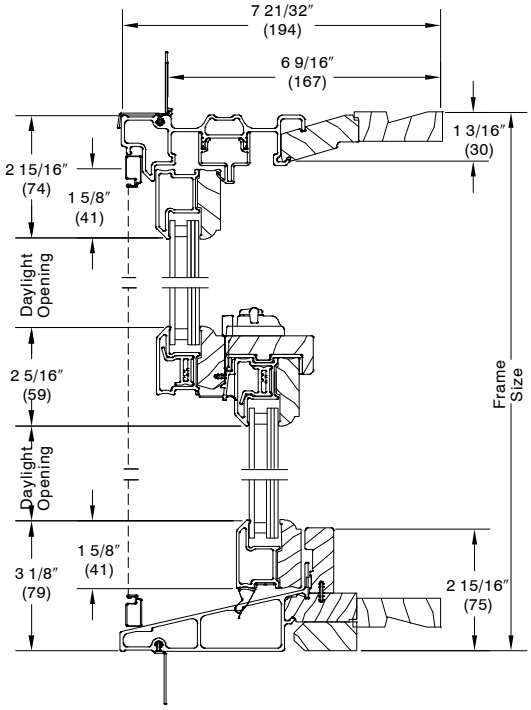

4 9/16″ JAMBS

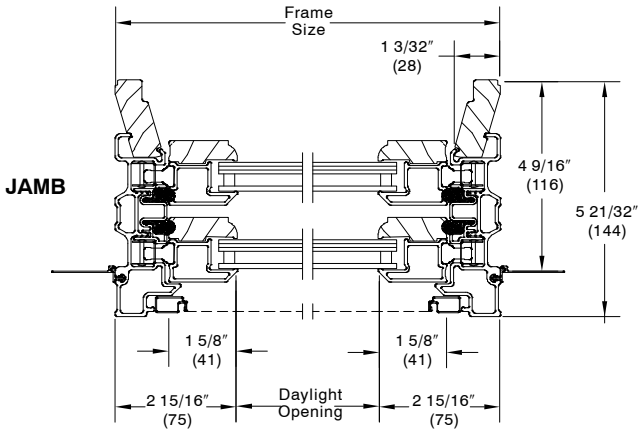

6 9/16″ JAMBS

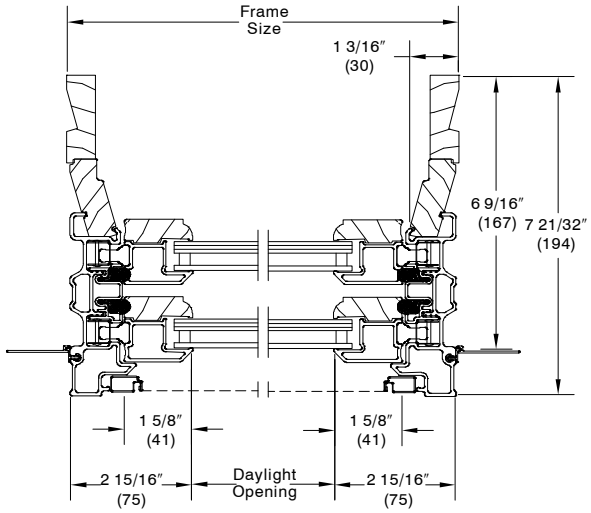

HIGH PERFORMANCE

4 9/16″ JAMBS

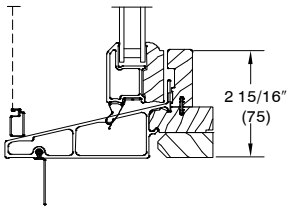

6 9/16″ JAMBS

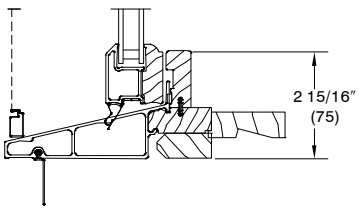

WOOD–ULTREX DOUBLE HUNG

SECTION DETAILS Not to Scale

STANDARD GLAZED

TRANSOM / PICTURE – 4 9/16″

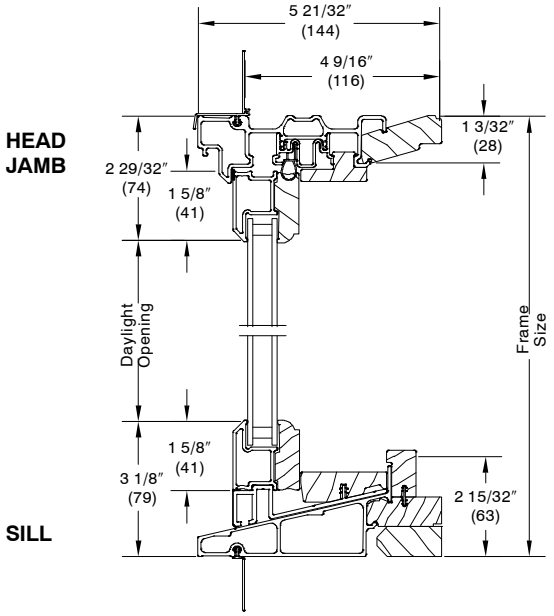

TRANSOM / PICTURE – 6 9/16″

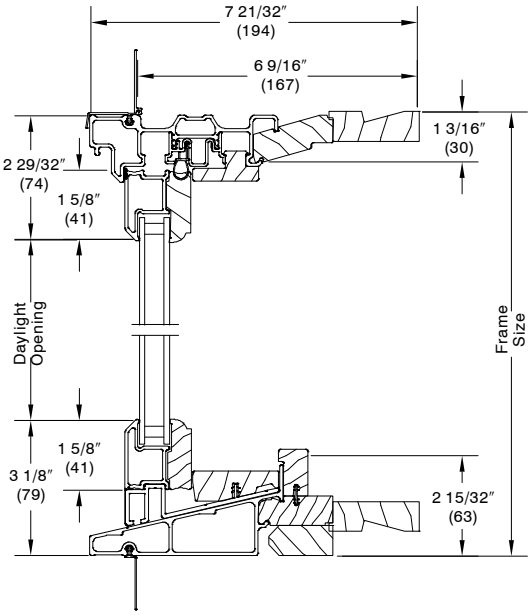

4 9/16″ JAMBS

JAMB

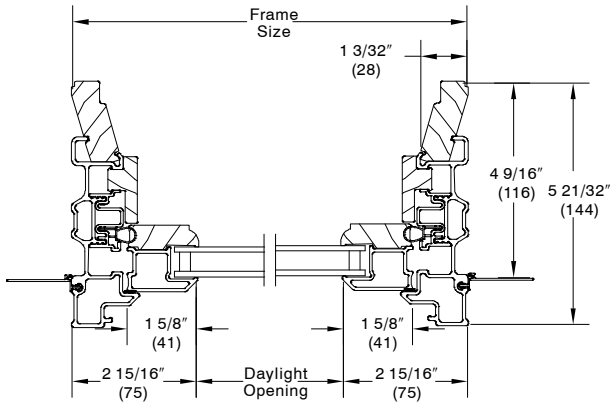

6 9/16″ JAMBS

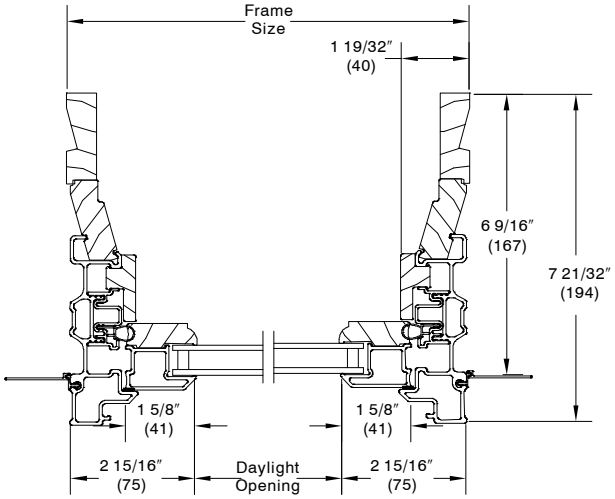

HIGH PERFORMANCE

4 9/16″ JAMBS

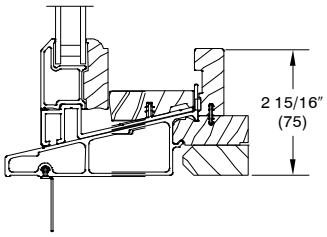

6 9/16″ JAMBS

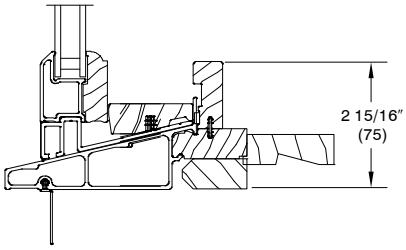

WOOD–ULTREX DOUBLE HUNG

SECTION DETAILS Not to Scale

DOUBLE HUNG – IMPACT UNITS

TRANSOM / PICTURE – 4 9/16″

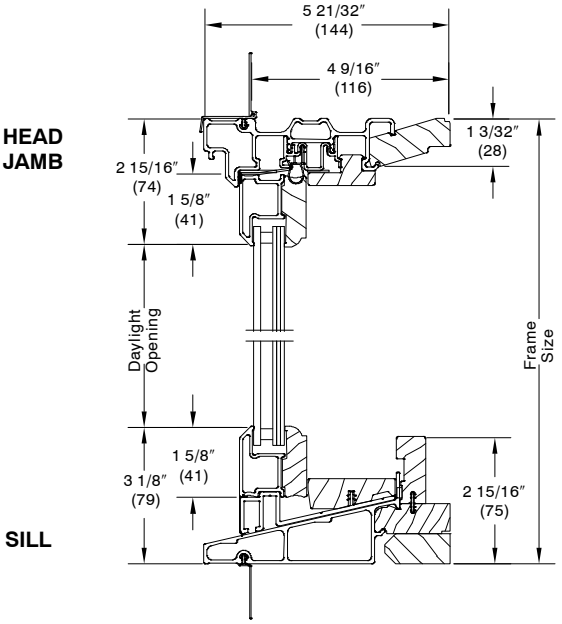

TRANSOM / PICTURE – 6 9/16″

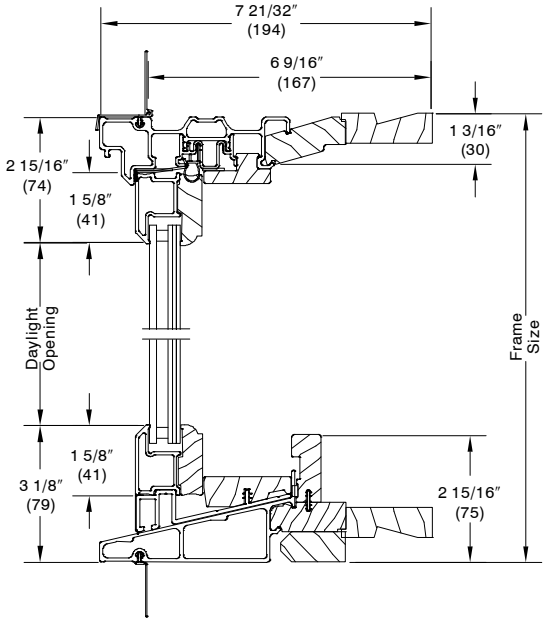

4 9/16″ JAMBS

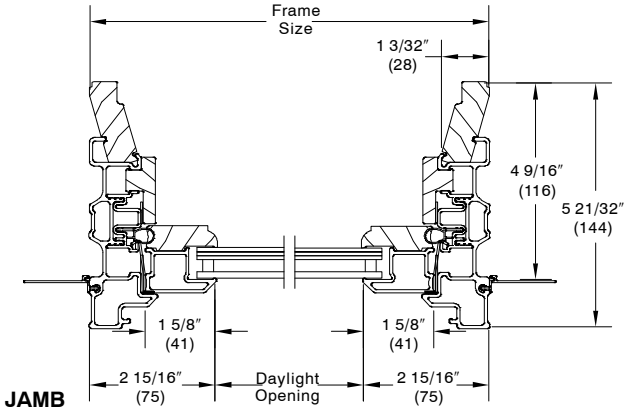

6 9/16″ JAMBS

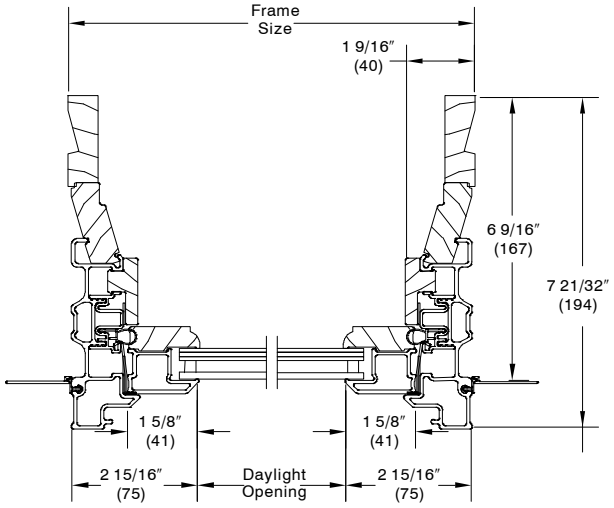

HIGH PERFORMANCE

4 9/16″ JAMBS

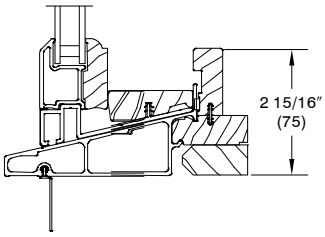

6 9/16″ JAMBS

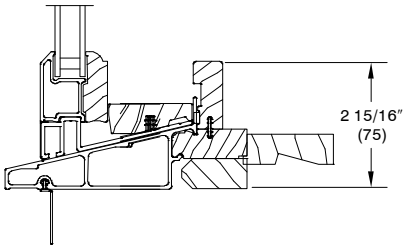

Factory Mulling

The Wood–Ultrex Double Hung may be mulled to Wood Ultrex Double Hung products, Direct Glaze Polygon, Integrity Round Tops, and Integrity Round Tops by Marvin.

- Standard mull limits (all factory mulls)
  - Maximum Mulled Assembly RO Size
    - 4 units wide x 1 unit high – 113–1/2″ (2883) x 76–1/4″ (1937)
    - 2 units wide x 2 units high – 84″ (2134) x 92″ (2337)
- Field Mulling beyond the above limitations is not recommended

Impact Certified Mull Limits: WDMA Hallmark certified to AAMA 450.

- If assemblies have individual units that have a lower design pressure than the mull; the entire assembly is rated at the lower design pressure.
- Mull certification includes 12″ mull brackets fastened at all mull joints.
- Items not included in certified mulls: Standard mull assemblies, Integrity round tops, Integrity round tops by Marvin, Impact multi–wide x multi–high assemblies.

1 Directional Mull Limits				
Product	**Max Span**	**Max TW or TH**	**Max R.O.**	**DP**
WU Double Hung Vertical Mulling IZ3	75 3/4″ (1924)	53 1/2″ (1359)	113 1/2″ x 76 1/4″ (2883 x 1937)	55/65
WU Double Hung Horizontal Mulling IZ3	62″ (1575)	47 1/8″ (1213)	63″ x 92″ (1600 x 2337)	55/65

- Standard Mulls are not certified
- Limited to 1H or 1W only
- Assembly DP is lowest DP of mull or any product
- Stepped Mulls are not certified
- Tributary Width or Tributary Height = 1/2A + 1/2B

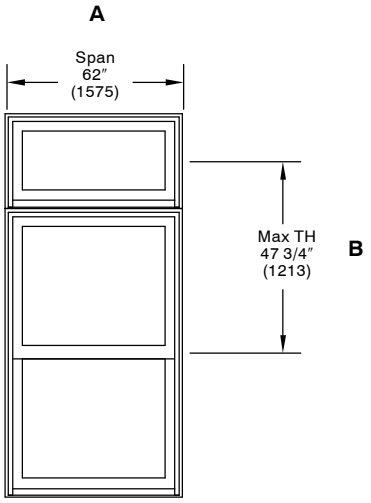

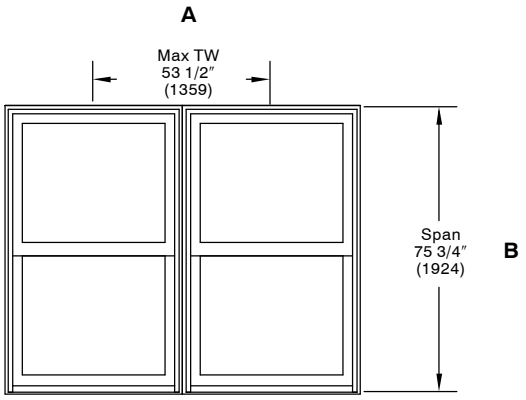

SECTION DETAILS – MULLIONS SCALE: 3″ = 1′0″

MULLIONS

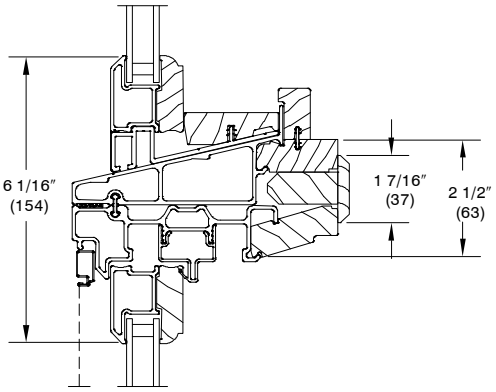

HORIZONTAL TRANSOM OVER OPERATING UNIT

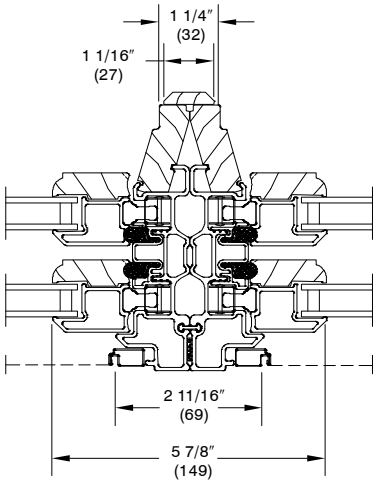

VERTICAL DOUBLE HUNG UNITS 2 WIDE

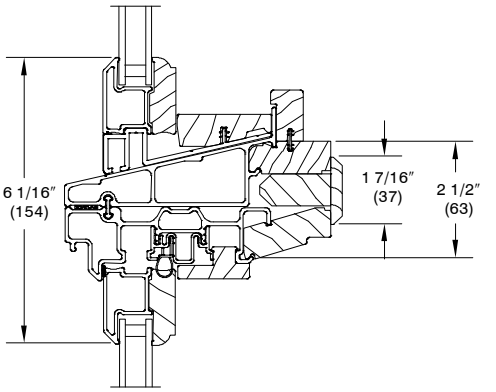

HORIZONTAL TRANSOM OVER PICTURE UNIT

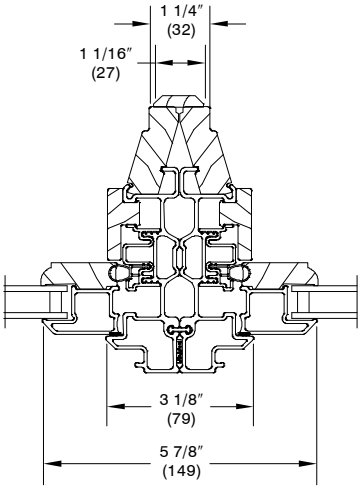

VERTICAL PICTURE UNIT 2 WIDE

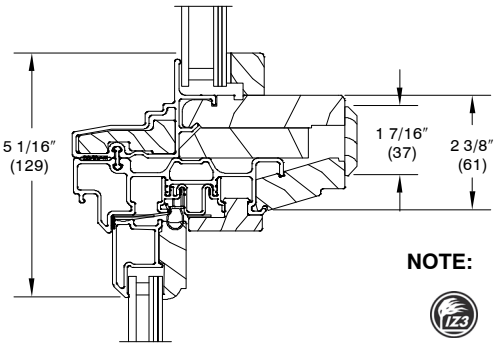

NOTE:

Logo represents units that are certified for Impact glazing with a wind zone 3

HORIZONTAL DG TRANSOM OVER PICTURE UNIT – IMPACT

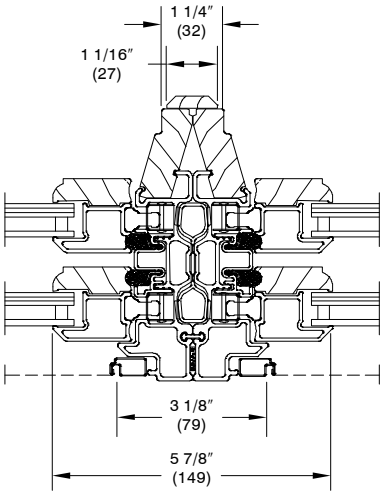

VERTICAL DOUBLE HUNG UNITS 2 WIDE – IMPACT

DIVIDED LITE OPTIONS

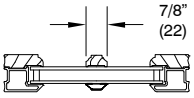

Simulated Divided Lite

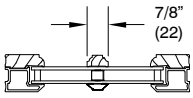

Simulated Divided Lite w/Spacer Bar

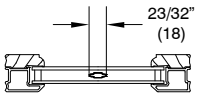

Aluminum Grille Between Glass

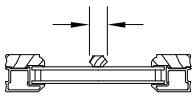

Wood Removable Grill

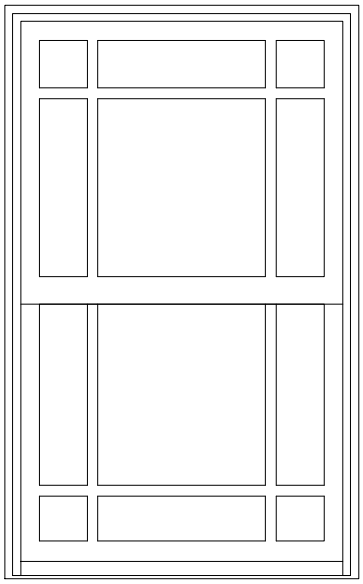

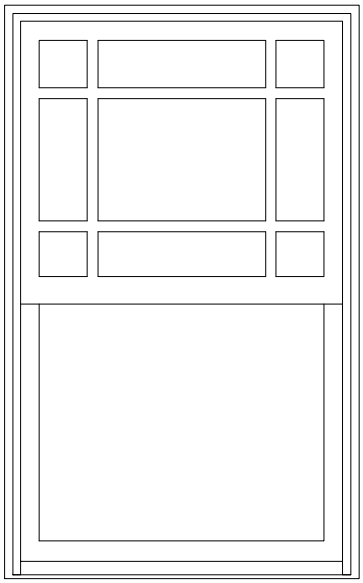

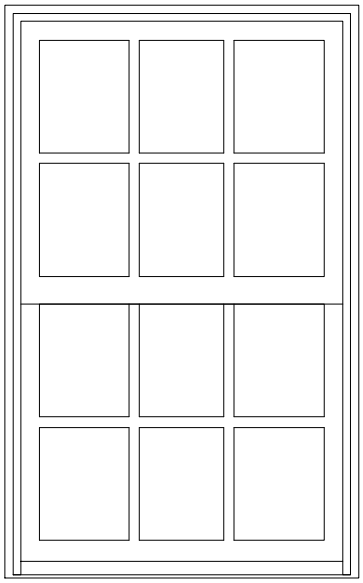

* Optional 6 lite Prairie cut for GBG or SDL.

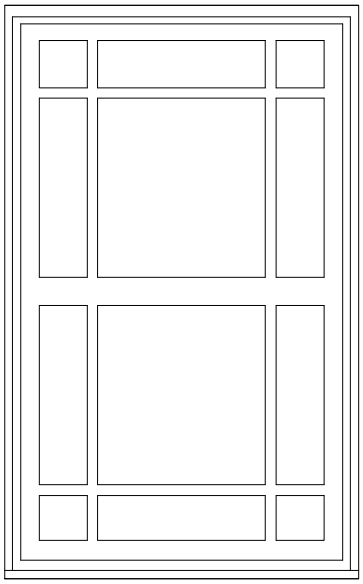

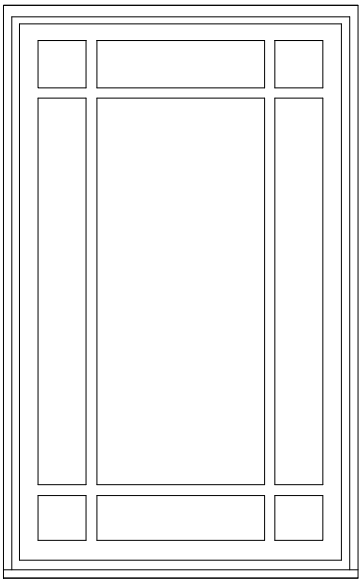

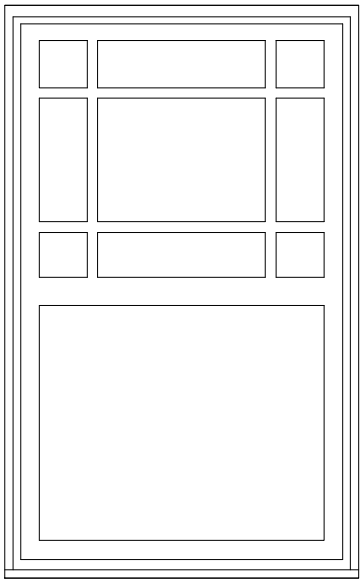

* Optional 9 lite Prairie cut for GBG or SDL.

NOTE: GBGs are not available on Impact IZ3 units.

NOTE: SDL with spacer bars are not available on Impact IZ3 units.

NOTE: 4" DLO lite cut minimum for 7/8" pattern.

Conversion Formula:

$$\frac{\text{Total DLO} - \text{Total bar width}}{\text{Number of lites}} = \text{Individual DLO}$$

* Prairie lite cuts are **not** available on IDHTR In–sash Double Hung Transoms due to size limitations.

WOOD–ULTREX DOUBLE HUNG

AVAILABLE DIVIDED LITE PATTERNS

Double Hung Divided Lite Options – Per Sash								
CN	Width							
	22		26		30		32	
Height	Rect Default/ Optional	Prairie Optional	Rect Default/ Optional	Prairie Optional	Rect Default/ Optional	Prairie Optional	Rect Default/ Optional	Prairie Optional
36	2W2H 2W1H	6–Lite	3W2H 2W1H 2W2H	6–Lite	3W2H 2W1H 2W2H	6–Lite	3W2H 2W1H 2W2H	6–Lite
40	2W2H 2W1H	6–Lite	3W2H 2W1H 2W2H	6–Lite	3W2H 2W1H 2W2H	6–Lite	3W2H 2W1H 2W2H	6–Lite
44	2W2H 2W1H	6–Lite	3W2H 2W1H 2W2H	6–Lite	3W2H 2W1H 2W2H	6–Lite	3W2H 2W1H 2W2H	6–Lite
48	2W2H 2W1H	6–Lite	3W2H 2W1H 2W2H	6–Lite	3W2H 2W1H 2W2H	6–Lite	3W2H 2W1H 2W2H	6–Lite
52	2W2H 2W1H	6–Lite	3W2H 2W1H 2W2H	6–Lite	3W2H 2W1H 2W2H	6–Lite	3W2H 2W1H 2W2H	6–Lite
56	2W2H 2W1H	6–Lite	3W2H 2W1H 2W2H	6–Lite	3W2H 2W1H 2W2H	6–Lite	3W2H 2W1H 2W2H	6–Lite
60	2W2H 2W1H	6–Lite	3W2H 2W1H 2W2H	6–Lite	3W2H 2W1H 2W2H	6–Lite	3W2H 2W1H 2W2H	6–Lite
64	2W2H 2W1H	6–Lite	3W2H 2W1H 2W2H	6–Lite	3W2H 2W1H 2W2H	6–Lite	3W2H 2W1H 2W2H	6–Lite
68	2W2H 2W1H	6–Lite	3W2H 2W1H 2W2H	6–Lite	3W2H 2W1H 2W2H	6–Lite	3W2H 2W1H 2W2H	6–Lite
72	2W3H 2W1H 2W2H	6–Lite	3W3H 2W1H 2W2H	6–Lite	3W3H 2W1H 2W2H	6–Lite	3W3H 2W1H 2W2H	6–Lite
76	2W3H 2W1H 2W2H	6–Lite	3W3H 2W1H 2W2H	6–Lite	3W3H 2W1H 2W2H	6–Lite	3W3H 2W1H 2W2H	6–Lite

WOOD–ULTREX DOUBLE HUNG

AVAILABLE DIVIDED LITE PATTERNS

Double Hung Divided Lite Options – Per Sash								
CN	Width							
	34		36		38		42	
Height	Rect Default/ Optional	Prairie Optional	Rect Default/ Optional	Prairie Optional	Rect Default/ Optional	Prairie Optional	Rect Default/ Optional	Prairie Optional
36	3W2H 2W1H 2W2H	6–Lite	3W2H 2W1H 2W2H	6–Lite	4W2H 2W1H 2W2H	6–Lite	4W2H 2W1H 2W2H	6–Lite
40	3W2H 2W1H 2W2H	6–Lite	3W2H 2W1H 2W2H	6–Lite	4W2H 2W1H 2W2H	6–Lite	4W2H 2W1H 2W2H	6–Lite
44	3W2H 2W1H 2W2H	6–Lite	3W2H 2W1H 2W2H	6–Lite	4W2H 2W1H 2W2H	6–Lite	4W2H 2W1H 2W2H	6–Lite
48	3W2H 2W1H 2W2H	6–Lite	3W2H 2W1H 2W2H	6–Lite	4W2H 2W1H 2W2H	6–Lite	4W2H 2W1H 2W2H	6–Lite
52	3W2H 2W1H 2W2H	6–Lite	3W2H 2W1H 2W2H	6–Lite	4W2H 2W1H 2W2H	6–Lite	4W2H 2W1H 2W2H	6–Lite
56	3W2H 2W1H 2W2H	6–Lite	3W2H 2W1H 2W2H	6–Lite	4W2H 2W1H 2W2H	6–Lite	4W2H 2W1H 2W2H	6–Lite
60	3W2H 2W1H 2W2H	6–Lite	3W2H 2W1H 2W2H	6–Lite	4W2H 2W1H 2W2H	6–Lite	4W2H 2W1H 2W2H	6–Lite
64	3W2H 2W1H 2W2H	6–Lite	3W2H 2W1H 2W2H	6–Lite	4W2H 2W1H 2W2H	6–Lite	4W2H 2W1H 2W2H	6–Lite
68	3W2H 2W1H 2W2H	6–Lite	3W2H 2W1H 2W2H	6–Lite	4W2H 2W1H 2W2H	6–Lite	4W2H 2W1H 2W2H	6–Lite
72	3W3H 2W1H 2W2H	6–Lite	3W3H 2W1H 2W2H	6–Lite	4W3H 2W1H 2W2H	6–Lite	4W3H 2W1H 2W2H	6–Lite
76	3W3H 2W1H 2W2H	6–Lite	3W3H 2W1H 2W2H	6–Lite	4W3H 2W1H 2W2H	6–Lite	4W3H 2W1H 2W2H	6–Lite

AVAILABLE DIVIDED LITE PATTERNS

Double Hung Cottage Top Sash Divided Lite Options								
CN	Width							
	22		26		30		32	
Height	Rect Default/ Optional	Prairie Optional	Rect Default/ Optional	Prairie Optional	Rect Default/ Optional	Prairie Optional	Rect Default/ Optional	Prairie Optional
56	3W2H 2W1H 2W2H	6–Lite	3W2H 2W1H 2W2H	6–Lite	3W2H 2W1H 2W2H	6–Lite	3W2H 2W1H 2W2H	6–Lite

Double Hung Cottage Bottom Sash Divided Lite Options								
CN	Width							
	22		26		30		32	
Height	Rect Default/ Optional	Prairie Optional	Rect Default/ Optional	Prairie Optional	Rect Default/ Optional	Prairie Optional	Rect Default/ Optional	Prairie Optional
68	3W2H 2W1H 2W2H	6–Lite	3W3H 2W1H 2W2H	6–Lite	3W3H 2W1H 2W2H	6–Lite	3W3H 2W1H 2W2H	6–Lite

Double Hung Cottage Top Sash Divided Lite Options								
CN	Width							
	34		36		38		42	
Height	Rect Default/ Optional	Prairie Optional	Rect Default/ Optional	Prairie Optional	Rect Default/ Optional	Prairie Optional	Rect Default/ Optional	Prairie Optional
56	3W2H 2W1H 2W2H	6–Lite	3W2H 2W1H 2W2H	6–Lite	3W2H 2W1H 2W2H	6–Lite	3W2H 2W1H 2W2H	6–Lite

Double Hung Cottage Bottom Sash Divided Lite Options								
CN	Width							
	34		36		38		42	
Height	Rect Default/ Optional	Prairie Optional	Rect Default/ Optional	Prairie Optional	Rect Default/ Optional	Prairie Optional	Rect Default/ Optional	Prairie Optional
68	3W3H 2W1H 2W2H	6–Lite	3W3H 2W1H 2W2H	6–Lite	4W3H 2W1H 2W2H	6–Lite	4W3H 2W1H 2W2H	6–Lite

AVAILABLE DIVIDED LITE PATTERNS

Double Hung Transom Divided Lite Options										
CN	Width									
	22		26		30		32		34	
Height	Rect Default/ Optional	Prairie Optional	Rect Default/ Optional	Prairie Optional	Rect Default/ Optional	Prairie Optional	Rect Default/ Optional	Prairie Optional	Rect Default/ Optional	Prairie Optional
16	2W1H	N/A	3W1H 2W1H	N/A	3W1H 2W1H	N/A	3W1H 2W1H	N/A	3W1H 2W1H	N/A
24	2W2H 2W1H	N/A	3W2H 2W1H	N/A	3w2H 2W1H	N/A	3w2H 2W1H	N/A	3W2H 2W1H	N/A

Double Hung Transom Divided Lite Options												
CN	Width											
	36		38		42		50		54		62	
Height	Rect Default/ Optional	Prairie Optional	Rect Default/ Optional	Prairie Optional	Rect Default/ Optional	Prairie Optional	Rect Default/ Optional	Prairie Optional	Rect Default/ Optional	Prairie Optional	Rect Default/ Optional	Prairie Optional
16	3W1H 2W1H	N/A	4W1H 2W1H	N/A	4W1H 2W1H	N/A	5W1H 2W1H	N/A	5W1H 2W1H	N/A	6W1H 2W1H	N/A
24	3W2H 2W1H	N/A	4W2H 2W1H	N/A	4W2H 2W1H	N/A	5W2H 2W1H	N/A	5W2H 2W1H	N/A	6W2H 2W1H	N/A

WOOD–ULTREX DOUBLE HUNG

AVAILABLE DIVIDED LITE PATTERNS

Double Hung Picture Divided Lite Options												
CN	Width											
	22		26		30		32		34		36	
Height	Rect Default/ Optional	Prairie Optional	Rect Default/ Optional	Prairie Optional	Rect Default/ Optional	Prairie Optional	Rect Default/ Optional	Prairie Optional	Rect Default/ Optional	Prairie Optional	Rect Default/ Optional	Prairie Optional
24	2W2H	9–Lite	3W2H	9–Lite	3W2H	9–Lite	3W2H	9–Lite	3W2H	9–Lite	3W2H	9–Lite
36	2W4H	9–Lite	3W4H	9–Lite	3W4H	9–Lite	3W4H	9–Lite	3W4H	9–Lite	3W4H	9–Lite
40	2W4H	9–Lite	3W4H	9–Lite	3W4H	9–Lite	3W4H	9–Lite	3W4H	9–Lite	3W4H	9–Lite
44	2W4H	9–Lite	3W4H	9–Lite	3W4H	9–Lite	3W4H	9–Lite	3W4H	9–Lite	3W4H	9–Lite
48	2W4H	9–Lite	3W4H	9–Lite	3W4H	9–Lite	3W4H	9–Lite	3W4H	9–Lite	3W4H	9–Lite
52	2W4H	9–Lite	3W4H	9–Lite	3W4H	9–Lite	3W4H	9–Lite	3W4H	9–Lite	3W4H	9–Lite
56	2W4H	9–Lite	3W4H	9–Lite	3W4H	9–Lite	3W4H	9–Lite	3W4H	9–Lite	3W4H	9–Lite
60	2W4H	9–Lite	3W4H	9–Lite	3W4H	9–Lite	3W4H	9–Lite	3W4H	9–Lite	3W4H	9–Lite
64	2W4H	9–Lite	3W4H	9–Lite	3W4H	9–Lite	3W4H	9–Lite	3W4H	9–Lite	3W4H	9–Lite
68	2W4H 2W5H	9–Lite	3W4H 3W5H	9–Lite	3W4H 3W5H	9–Lite	3W4H 3W5H	9–Lite	3W4H 3W5H	9–Lite	3W4H 3W5H	9–Lite
72	2W6H	9–Lite	3W6H	9–Lite	3W6H	9–Lite	3W6H	9–Lite	3W6H	9–Lite	3W6H	9–Lite
76	2W6H	9–Lite	3W6H	9–Lite	3W6H	9–Lite	3W6H	9–Lite	3W6H	9–Lite	3W6H	9–Lite

AVAILABLE DIVIDED LITE PATTERNS

Double Hung Picture Divided Lite Options										
CN	Width									
	38		42		50		54		62	
Height	Rect Default/ Optional	Prairie Optional	Rect Default/ Optional	Prairie Optional	Rect Default/ Optional	Prairie Optional	Rect Default/ Optional	Prairie Optional	Rect Default/ Optional	Prairie Optional
24	4W2H	9–Lite	4W2H	9–Lite	5W2H	9–Lite	5W2H	9–Lite	6W2H	9–Lite
36	4W4H	9–Lite	4W4H	9–Lite	5W4H	9–Lite	5W4H	9–Lite	6W4H	9–Lite
40	4W4H	9–Lite	4W4H	9–Lite	5W4H	9–Lite	5W4H	9–Lite	6W4H	9–Lite
44	4W4H	9–Lite	4W4H	9–Lite	5W4H	9–Lite	5W4H	9–Lite	6W4H	9–Lite
48	4W4H	9–Lite	4W4H	9–Lite	5W4H	9–Lite	5W4H	9–Lite	6W4H	9–Lite
52	4W4H	9–Lite	4W4H	9–Lite	5W4H	9–Lite	5W4H	9–Lite	6W4H	9–Lite
56	4W4H	9–Lite	4W4H	9–Lite	5W4H	9–Lite	5W4H	9–Lite	6W4H	9–Lite
60	4W4H	9–Lite	4W4H	9–Lite	5W4H	9–Lite	5W4H	9–Lite	6W4H	9–Lite
64	4W4H	9–Lite	4W4H	9–Lite	5W4H	9–Lite	5W4H 5W5H	9–Lite	6W4H	9–Lite
68	4W4H 4W5H	9–Lite	4W4H 4W5H	9–Lite	5W4H 5W5H	9–Lite	5W4H	9–Lite	N/A	
72	4W6H	9–Lite	4W6H	9–Lite	5W6H	9–Lite	5W6H	9–Lite	N/A	
76	4W6H	9–Lite	4W6H	9–Lite	5W6H	9–Lite	5W6H	9–Lite	N/A	

WOOD–ULTREX DOUBLE HUNG BAY

30° BAY UNIT

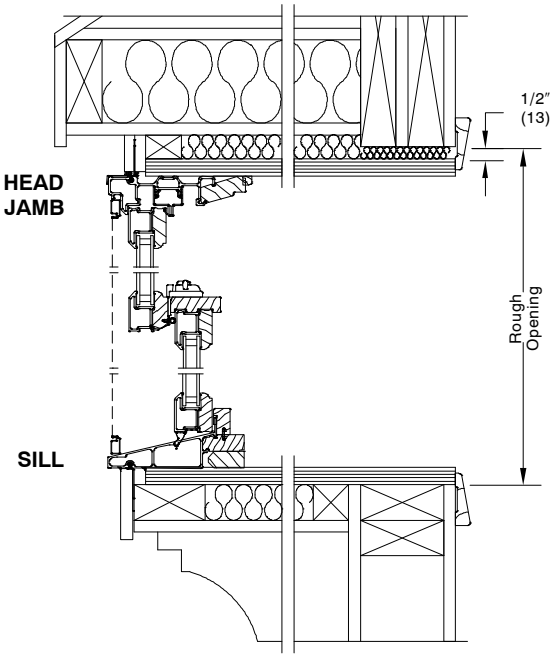

Structural support members supplied by others.

30° BAY
Scale: 1 1/2″ = 1′–0″

DOUBLE HUNG – HEIGHT DIMENSIONS							
Double Hung CN	Picture Unit CN	MO Height		RO Height		OM of Jamb to OM of Jamb	
		ft–in	mm	ft –in	mm	ft–in	mm
36	N/A	3–1 7/16	951	3–1 11/16	957	3–1 3/16	945
40	40	3–5 7/16	1053	3–5 11/16	1059	3–5 3/16	1046
44	44	3–9 7/16	1154	3–9 11/16	1160	3–9 3/16	1148
48	48	4–1 7/16	1256	4–1 11/16	1262	4–1 3/16	1249
52	52	4–5 7/16	1357	4–5 11/16	1364	4–5 3/16	1351
56	56	4–9 7/16	1459	4–9 11/16	1465	4–9 3/16	1453
60	60	5–1 7/16	1561	5–1 11/16	1567	5–1 3/16	1554
64	64	5–5 7/16	1662	5–5 11/16	1668	5–5 3/16	1656
68	68	5–9 7/16	1764	5–9 11/16	1770	5–9 3/16	1757
72	N/A	6–1 7/16	1865	6–1 11/16	1872	6–1 3/16	1859
76	N/A	6–5 7/16	1967	6–5 11/16	1973	6–5 3/16	1961

NOTE: Impact glazed units are not available in Bay configurations.

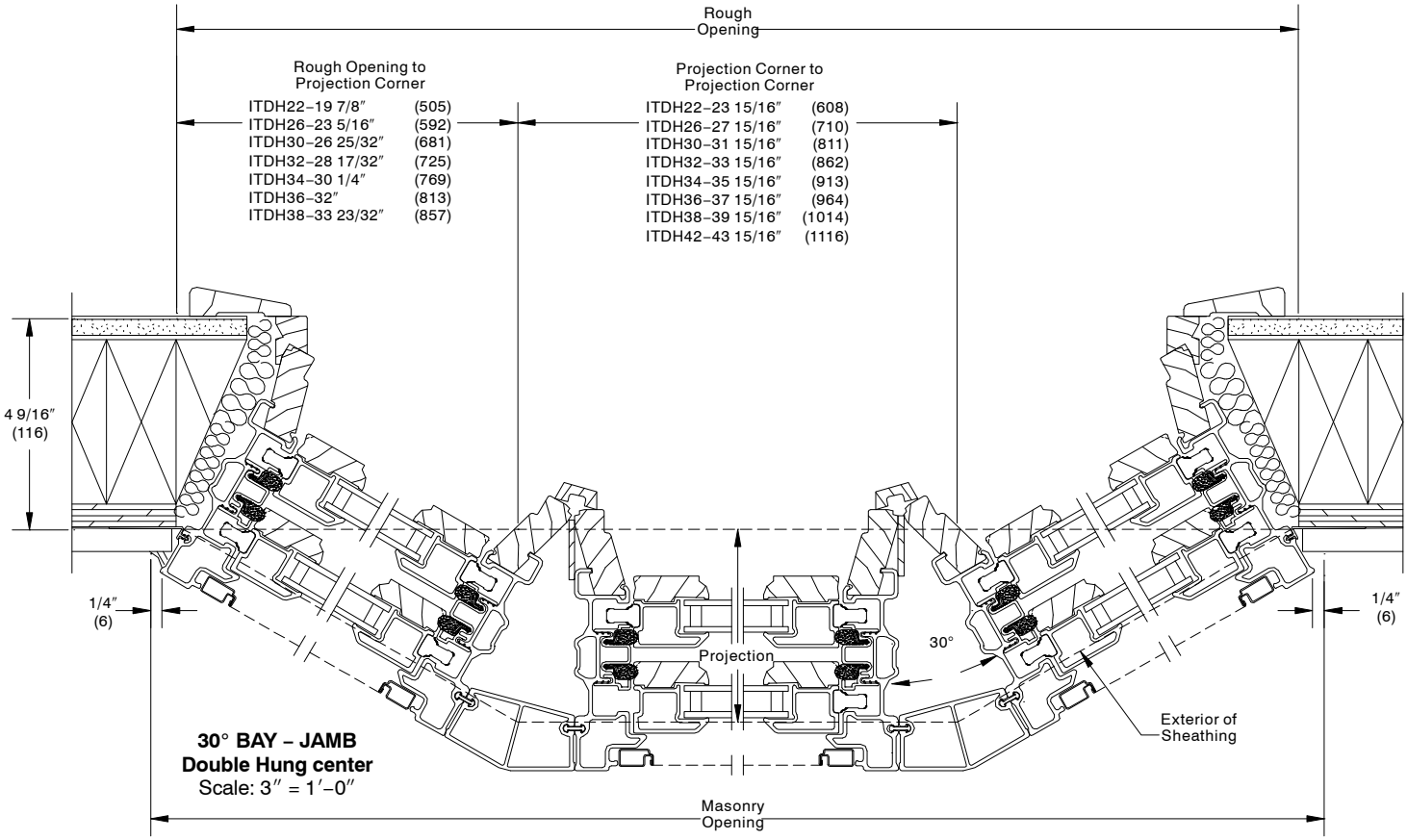

30° BAY – JAMB
Double Hung center
Scale: 3″ = 1′–0″

WOOD–ULTREX DOUBLE HUNG BAY

30° BAY UNITS

30° BAY – JAMB
Picture Center Unit
Scale: 3″ = 1′–0″

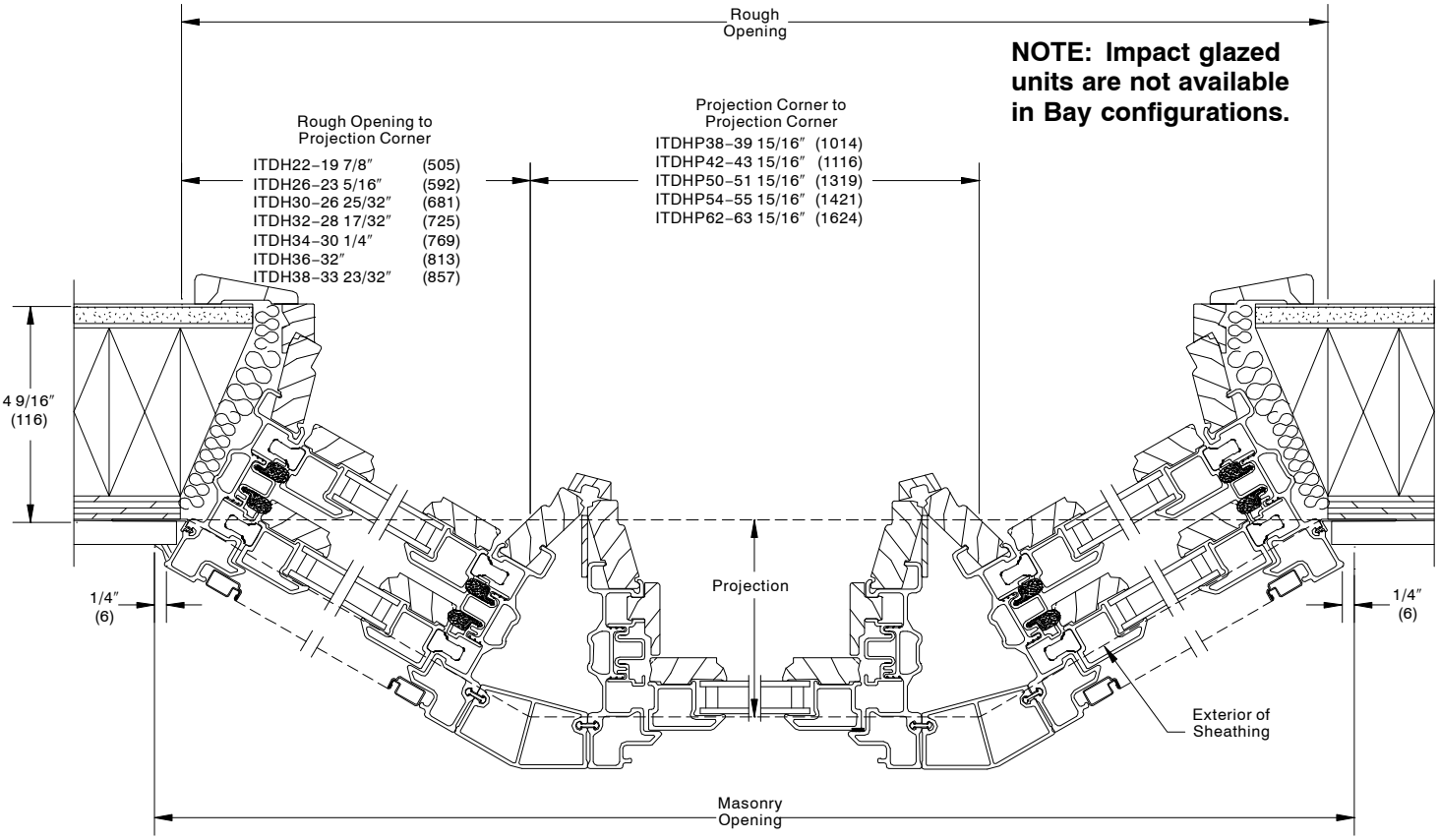

WOOD–ULTREX DOUBLE HUNG BAY

30° BAY UNITS – WIDTH DIMENSIONS

30 DEGREE DOUBLE HUNG – WIDTH DIMENSIONS								
Unit#	MO Width		RO WIDTH		OM of Jamb to OM of Jamb		Projection	
	ft–in	mm	ft–in	mm	ft–in	mm	in	mm
22 – Wide Units								
22–22–22	5–4 7/8	(1648)	5–3 11/16	(1617)	4–11 5/8	(1514)	11 3/8	(289)
22–26–22	5–8 7/8	(1750)	5–7 11/16	(1719)	5–3 5/8	(1616)	11 3/8	(289)
22–30–22	6–0 7/8	(1852)	5–11 11/16	(1821)	5–7 5/8	(1717)	11 3/8	(289)
22–32–22	6–2 7/8	(1902)	6–1 11/16	(1871)	5–9 5/8	(1768)	11 3/8	(289)
22–34–22	6–4 7/8	(1953)	6–3 11/16	(1922)	5–11 5/8	(1819)	11 3/8	(289)
22–36–22	6–6 7/8	(2004)	6–5 11/16	(1973)	6–1 5/8	(1870)	11 3/8	(289)
22–38–22	6–8 7/8	(2055)	6–7 11/16	(2024)	6–3 5/8	(1921)	11 3/8	(289)
22–42–22	7–0 7/8	(2156)	6–11 11/16	(2125)	6–7 5/8	(2022)	11 3/8	(289)
26 – Wide Units								
26–22–26	5–11 13/16	(1824)	5–10 5/8	(1793)	5–6 9/16	(1690)	13 3/8	(340)
26–26–26	6–3 13/16	(1926)	6–2 5/8	(1895)	5–10 9/16	(1792)	13 3/8	(340)
26–30–26	6–7 13/16	(2028)	6–6 5/8	(1997)	6–2 9/16	(1893)	13 3/8	(340)
26–32–26	6–9 13/16	(2078)	6–8 5/8	(2047)	6–4 9/16	(1944)	13 3/8	(340)
26–34–26	6–11 13/16	(2129)	6–10 5/8	(2098)	6–6 9/16	(1995)	13 3/8	(340)
26–36–26	7–1 13/16	(2180)	7–0 5/8	(2149)	6–8 9/16	(2046)	13 3/8	(340)
26–38–26	7–3 13/16	(2231)	7–2 5/8	(2200)	6–10 9/16	(2097)	13 3/8	(340)
26–42–26	7–7 13/16	(2332)	7–6 5/8	(2301)	7–2 9/16	(2198)	13 3/8	(340)
30– Wide Units								
30–22–30	6–6 3/4	(2000)	6–5 9/16	(1969)	6–1 1/2	(1866)	15 3/8	(391)
30–26–30	6–10 3/4	(2102)	6–9 9/16	(2071)	6–5 1/2	(1968)	15 3/8	(391)
30–30–30	7–2 3/4	(2204)	7–1 9/16	(2173)	6–9 1/2	(2069)	15 3/8	(391)
30–32–30	7–4 3/4	(2254)	7–3 9/16	(2223)	6–11 1/2	(2120)	15 3/8	(391)
30–34–30	7–6 3/4	(2305)	7–5 9/16	(2274)	7–1 1/2	(2171)	15 3/8	(391)
30–36–30	7–8 3/4	(2356)	7–7 9/16	(2325)	7–3 1/2	(2222)	15 3/8	(391)
30–38–30	7–10 3/4	(2407)	7–9 9/16	(2376)	7–5 1/2	(2273)	15 3/8	(391)
30–42–30	8–2 3/4	(2508)	8–1 9/16	(2477)	7–9 1/2	(2374)	15 3/8	(391)
32 – Wide Units								
32–22–32	6–10 3/16	(2088)	6–9	(2057)	6–4 15/16	(1954)	16 3/8	(416)
32–26–32	7–2 3/16	(2190)	7–1	(2159)	6–8 15/16	(2056)	16 3/8	(416)
32–30–32	7–6 3/16	(2291)	7–5	(2261)	7–0 15/16	(2157)	16 3/8	(416)
32–32–32	7–8 3/16	(2342)	7–7	(2311)	7–2 15/16	(2208)	16 3/8	(416)
32–34–32	7–10 3/16	(2393)	7–9	(2362)	7–4 15/16	(2259)	16 3/8	(416)
32–36–32	8–0 3/16	(2444)	7–11	(2413)	7–6 15/16	(2310)	16 3/8	(416)
38–38–32	8–2 3/16	(2495)	8–1	(2464)	7–8 15/16	(2361)	16 3/8	(416)
32–42–32	8–6 3/16	(2596)	8–5	(2565)	8–0 15/16	(2462)	16 3/8	(416)
34 – Wide Units								
34–22–34	7–1 11/16	(2176)	7–0 7/16	(2145)	6–8 3/8	(2042)	17 3/8	(441)
34–26–34	7–5 11/16	(2278)	7–4 7/16	(2247)	7–0 3/8	(2144)	17 3/8	(441)
34–30–34	7–9 11/16	(2379)	7–8 7/16	(2349)	7–4 3/8	(2245)	17 3/8	(441)
34–32–34	7–11 11/16	(2430)	7–10 7/16	(2399)	7–6 3/8	(2296)	17 3/8	(441)
34–34–34	8–1 11/16	(2481)	8–0 7/16	(2450)	7–8 3/8	(2347)	17 3/8	(441)
34–36–34	8–3 11/16	(2532)	8–2 7/16	(2501)	7–10 3/8	(2398)	17 3/8	(441)
34–38–34	8–5 11/16	(2583)	8–4 7/16	(2552)	8–0 3/8	(2449)	17 3/8	(441)
34–42–34	8–9 11/16	(2684)	8–8 7/16	(2653)	8–4 3/8	(2550)	17 3/8	(441)

30° BAY UNITS – WIDTH DIMENSIONS

30 DEGREE DOUBLE HUNG – WIDTH DIMENSIONS								
Unit#	MO Width		RO WIDTH		OM of Jamb to OM of Jamb		Projection	
	ft–in	mm	ft–in	mm	ft–in	mm	in	mm
36 – Wide Units								
36–22–36	7–5 1/8	(2264)	7–3 15/16	(2233)	6–11 7/8	(2130)	18 3/8	(467)
36–26–36	7–9 1/8	(2366)	7–7 15/16	(2335)	7–3 7/8	(2232)	18 3/8	(467)
36–30–36	8–1 1/8	(2467)	7–11 15/16	(2436)	7–7 7/8	(2333)	18 3/8	(467)
36–32–36	8–3 1/8	(2518)	8–1 15/16	(2487)	7–9 7/8	(2384)	18 3/8	(467)
36–34–36	8–5 1/8	(2569)	8–3 15/16	(2538)	7–11 7/8	(2435)	18 3/8	(467)
36–36–36	8–7 1/8	(2620)	8–5 15/16	(2589)	8–1 7/8	(2486)	18 3/8	(467)
36–38–36	8–9 1/8	(2671)	8–7 15/16	(2640)	8–3 7/8	(2537)	18 3/8	(467)
36–42–36	9–1 1/8	(2772)	8–11 15/16	(2741)	8–7 7/8	(2638)	18 3/8	(467)
38 – Wide Units								
38–22–38	7–8 5/8	(2352)	7–7 3/8	(2321)	7–3 5/16	(2218)	19 3/8	(492)
38–26–38	8–0 5/8	(2454)	7–11 3/8	(2423)	7–7 5/16	(2320)	19 3/8	(492)
38–30–38	8–4 5/8	(2555)	8–3 3/8	(2524)	7–11 5/16	(2421)	19 3/8	(492)
38–32–38	8–6 5/8	(2606)	8–5 3/8	(2575)	8–1 5/16	(2472)	19 3/8	(492)
38–34–38	8–8 5/8	(2657)	8–7 3/8	(2626)	8–3 5/16	(2523)	19 3/8	(492)
38–36–38	8–10 5/8	(2708)	8–9 3/8	(2677)	8–5 5/16	(2574)	19 3/8	(492)
38–38–38	9–0 5/8	(2759)	8–11 3/8	(2728)	8–7 5/16	(2625)	19 3/8	(492)
38–42–38	9–4 5/8	(2860)	9–3 3/8	(2829)	8–11 5/16	(2726)	19 3/8	(492)
42– Wide Units								
42–22–42	8–3 9/16	(2528)	8–2 5/16	(2497)	7–10 1/2	(2401)	21 3/8	(543)
42–26–42	8–7 9/16	(2630)	8–6 5/16	(2599)	8–2 1/2	(2503)	21 3/8	(543)
42–30–42	8–11 9/16	(2731)	8–10 5/16	(2700)	8–6 1/2	(2604)	21 3/8	(543)
42–32–42	9–1 9/16	(2782)	9–0 5/16	(2751)	8–8 1/2	(2655)	21 3/8	(543)
42–34–42	9–3 9/16	(2833)	9–2 5/16	(2802)	8–10 1/2	(2706)	21 3/8	(543)
42–36–42	9–5 9/16	(2884)	9–4 5/16	(2853)	9–0 1/2	(2757)	21 3/8	(543)
42–38–42	9–7 9/16	(2935)	9–6 5/16	(2904)	9–2 1/2	(2807)	21 3/8	(543)

WOOD–ULTREX DOUBLE HUNG BAY

45° BAY UNITS

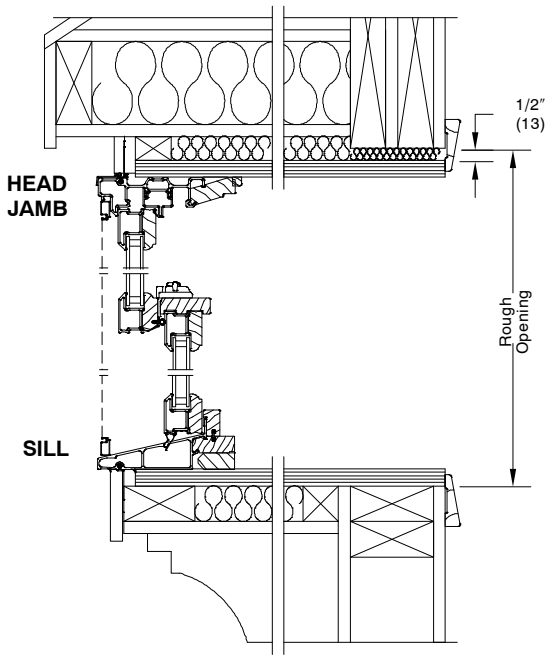

Structural support members supplied by others.

DOUBLE HUNG – HEIGHT DIMENSIONS							
Double Hung CN	Picture Unit CN	MO Height		RO Height		OM of Jamb to OM of Jamb	
		ft–in	mm	ft –in	mm	ft–in	mm
36	N/A	3–1 7/16	951	3–1 11/16	957	3–1 3/16	945
40	40	3–5 7/16	1053	3–5 11/16	1059	3–5 3/16	1046
44	44	3–9 7/16	1154	3–9 11/16	1160	3–9 3/16	1148
48	48	4–1 7/16	1256	4–1 11/16	1262	4–1 3/16	1249
52	52	4–5 7/16	1357	4–5 11/16	1364	4–5 3/16	1351
56	56	4–9 7/16	1459	4–9 11/16	1465	4–9 3/16	1453
60	60	5–1 7/16	1561	5–1 11/16	1567	5–1 3/16	1554
64	64	5–5 7/16	1662	5–5 11/16	1668	5–5 3/16	1656
68	68	5–9 7/16	1764	5–9 11/16	1770	5–9 3/16	1757
72	N/A	6–1 7/16	1865	6–1 11/16	1872	6–1 3/16	1859
76	N/A	6–5 7/16	1967	6–5 11/16	1973	6–5 3/16	1961

NOTE: Impact glazed units are not available in Bay configurations.

45° BAY
Scale: 1 1/2″ = 1′–0″

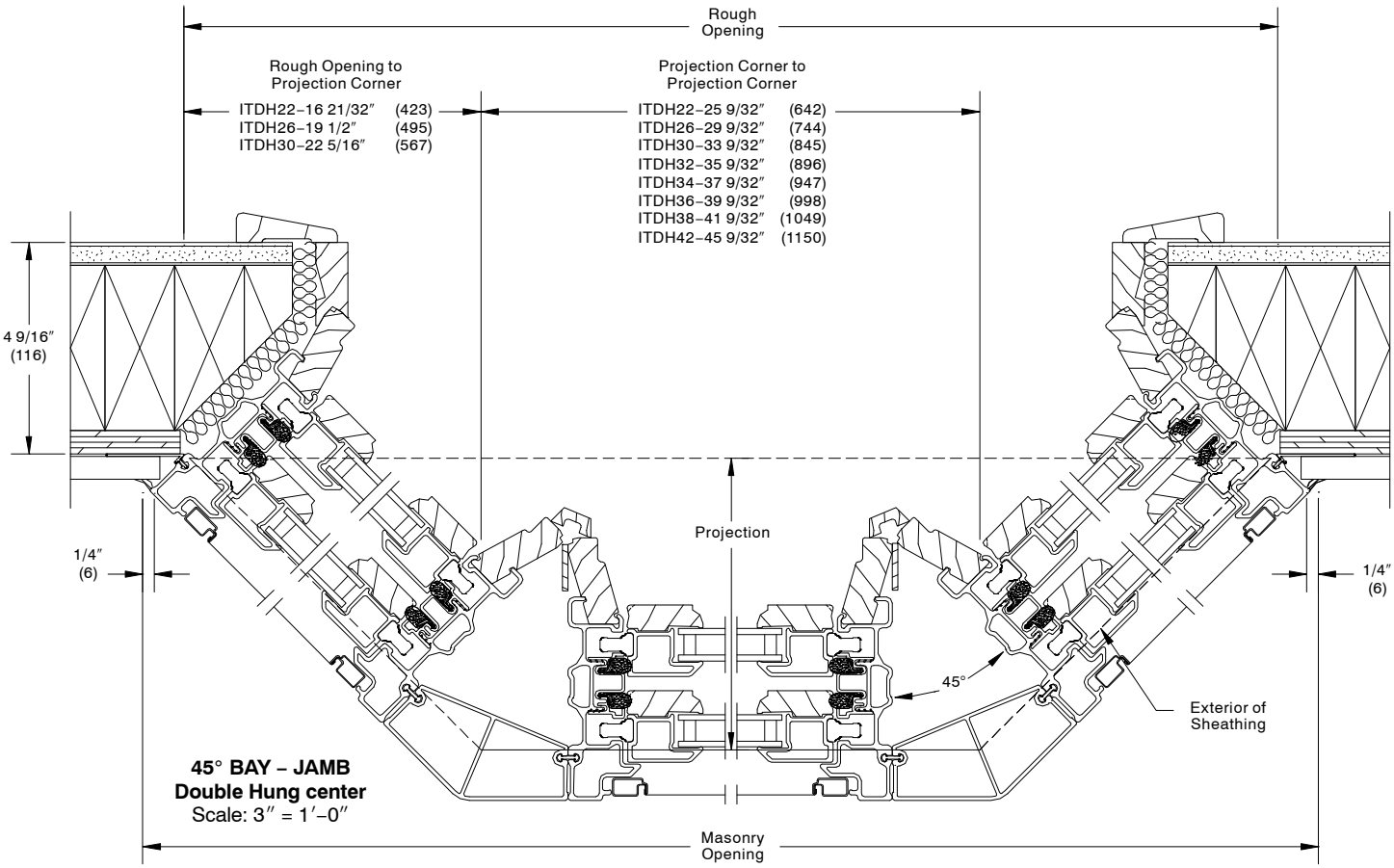

45° BAY – JAMB
Double Hung center
Scale: 3″ = 1′–0″

WOOD–ULTREX DOUBLE HUNG BAY

45° BAY UNITS

NOTE: Impact glazed units are not available in Bay configurations.

45° BAY – JAMB
Picture Center Unit
Scale: 3″ = 1′–0″

NOTE: Factory assembled bay units include head and seat boards.
NOTE: Structural support members and interior trim supplied by others.

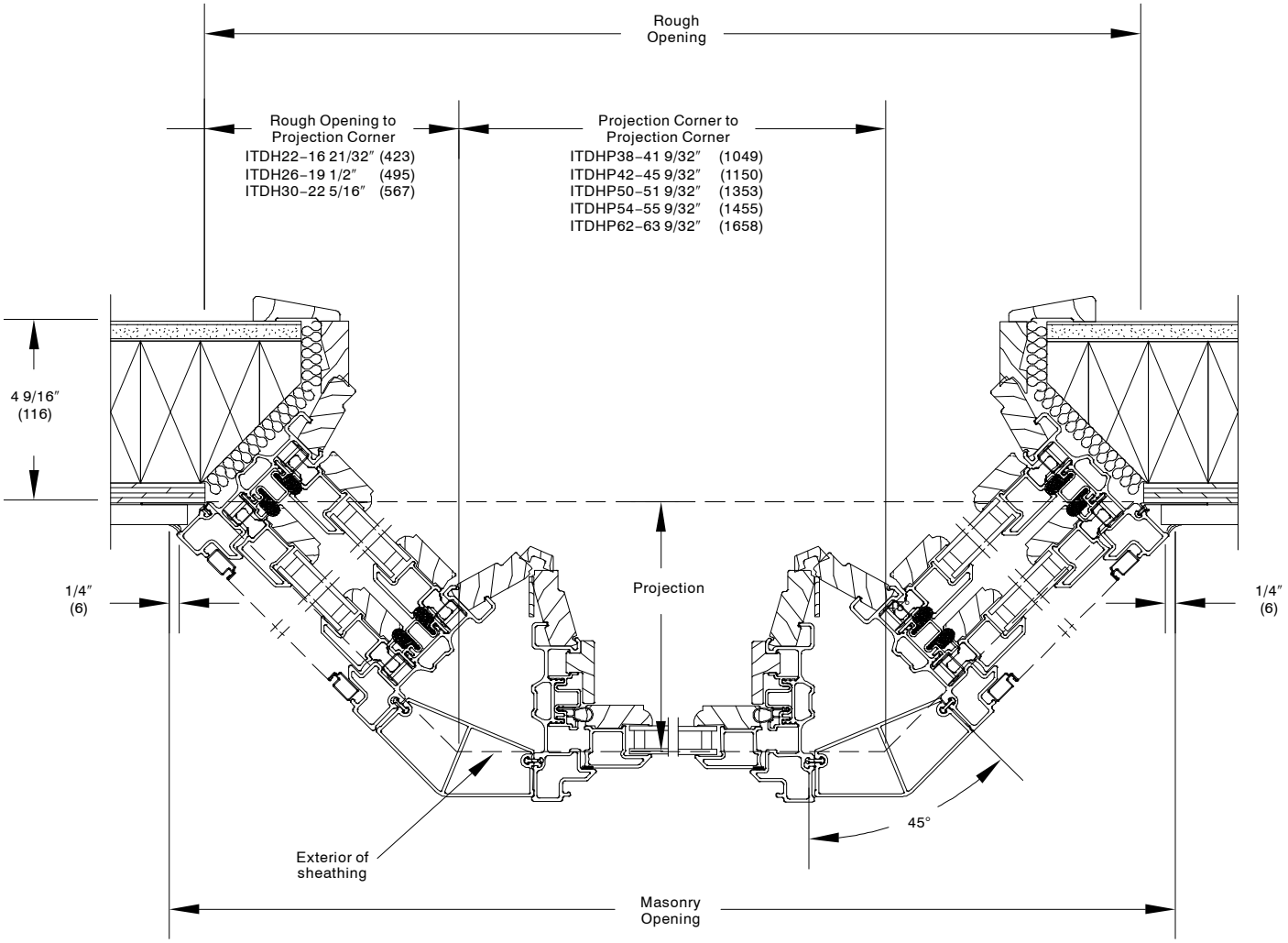

WOOD–ULTREX DOUBLE HUNG BAY

45° BAY UNITS – WIDTH DIMENSIONS

45 DEGREE DOUBLE HUNG – WIDTH DIMENSIONS								
Unit#	MO Width		RO WIDTH		OM of Jamb to OM of Jamb		Projection	
	ft–in	mm	ft–in	mm	ft–in	mm	in	mm
22 – Wide Units								
22–22–22	5–0 3/8	1534	4–10 5/8	1489	4–4 11/16	1339	16 9/16	421
22–26–22	5–4 3/8	1636	5–2 5/8	1590	4–8 11/16	1440	16 9/16	421
22–30–22	5–8 3/8	1737	5–6 5/8	1692	5–0 11/16	1542	16 9/16	421
22–32–22	5–10 3/8	1788	5–8 5/8	1743	5–2 11/16	1593	16 9/16	421
22–34–22	6–0 3/8	1839	5–10 5/8	1793	5–4 11/16	1644	16 9/16	421
22–36–22	6–2 3/8	1890	6–0 5/8	1844	5–6 11/16	1694	16 9/16	421
22–38–22	6–4 3/8	1941	6–2 5/8	1895	5–8 11/16	1745	16 9/16	421
22–42–22	6–8 3/8	2042	6–6 5/8	1997	6–0 11/16	1847	16 9/16	421
26 – Wide Units								
26–22–26	5–6 1/16	1678	5–4 1/4	1632	4–10 3/8	1483	19 3/8	492
26–26–26	5–10 1/16	1780	5–8 1/4	1734	5–2 3/8	1584	19 3/8	492
26–30–26	6–2 1/16	1881	6–0 1/4	1836	5–6 3/8	1686	19 3/8	492
26–32–26	6–4 1/16	1932	6–2 1/4	1886	5–8 3/8	1737	19 3/8	492
26–34–26	6–6 1/16	1983	6–4 1/4	1937	5–10 3/8	1787	19 3/8	492
26–36–26	6–8 1/16	2034	6–6 1/4	1988	6–0 3/8	1838	19 3/8	492
26–38–26	6–10 1/16	2084	6–8 1/4	2039	6–2 3/8	1889	19 3/8	492
26–42–26	7–2 1/16	2186	7–0 1/4	2140	6–6 3/8	1991	19 3/8	492
30– Wide Units								
30–22–30	5–11 11/16	1822	5–9 15/16	1776	5–4	1626	22 7/32	564
30–26–30	6–3 11/16	1923	6–1 15/16	1878	5–8	1728	22 7/32	564
30–30–30	6–7 11/16	2025	6–5 15/16	1979	6–0	1829	22 7/32	564
30–32–30	6–9 11/16	2076	6–7 15/16	2030	6–2	1880	22 7/32	564
30–34–30	6–11 11/16	2126	6–9 15/16	2081	6–4	1932	22 7/32	564
30–36–30	7–1 11/16	2177	6–11 15/16	2132	6–6	1982	22 7/32	564
30–38–30	7–3 11/16	2228	7–1 15/16	2182	6–8	2033	22 7/32	564
30–42–30	7–7 11/16	2330	7–5 15/16	2284	7–0	2134	22 7/32	564

NOTE: White interior finish on head and seat board is available at no additional charge for factory mulled bay assemblies only.

WOOD–ULTREX DOUBLE HUNG

INSTALLATION SUGGESTION Scale 3″ = 1′ 0″

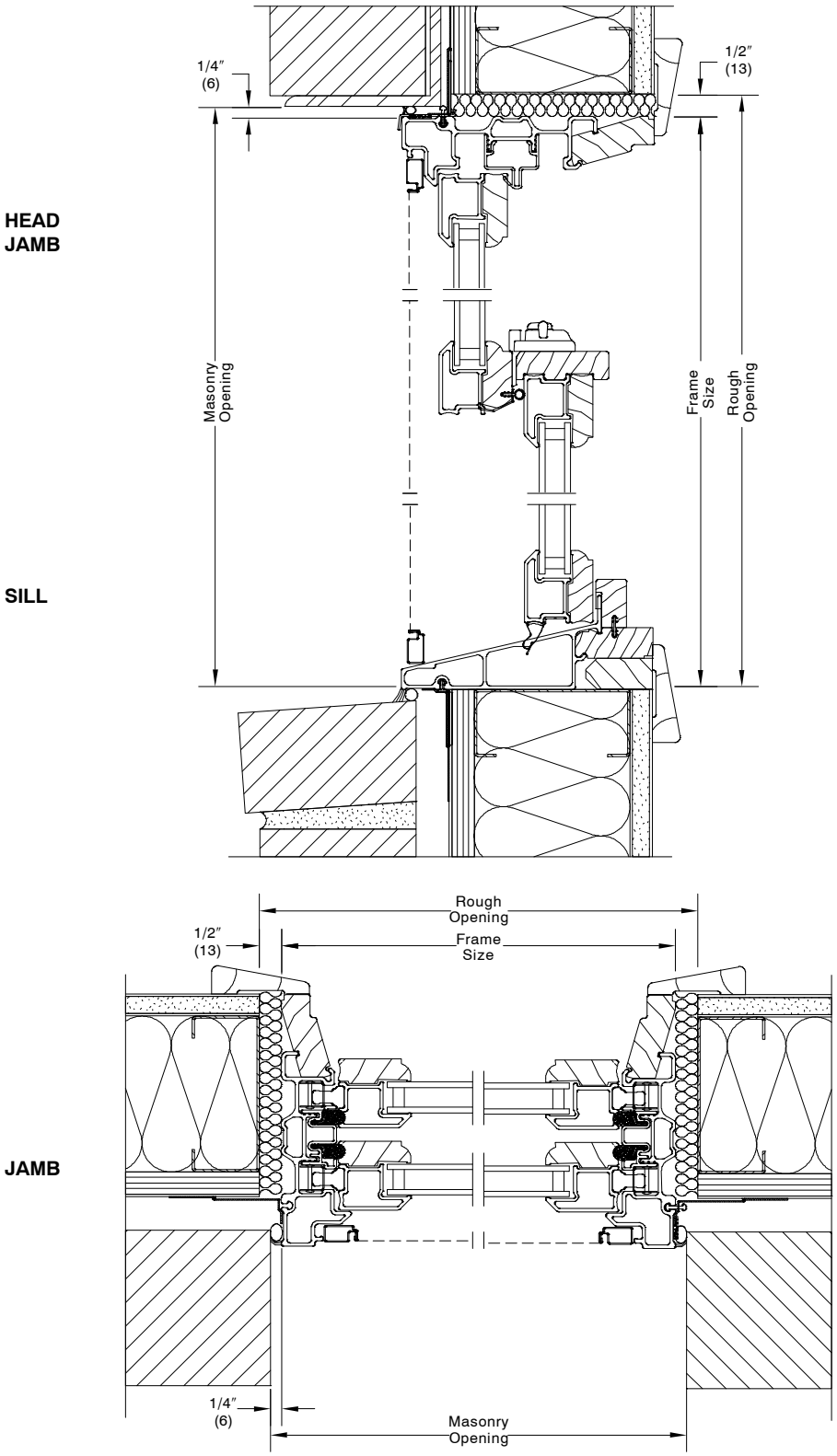

BRICK VENEER WITH STEEL FRAME CONSTRUCTION

NOTE: The above wall sections represent typical wall conditions, these details are not intended as installation instructions. Please refer to the installation instructions provided with the purchased units.

NOTE: Picture unit Installation similar.

WOOD–ULTREX DOUBLE HUNG

INSTALLATION SUGGESTION Scale 3″ = 1′ 0″

HEAD
JAMB

SILL

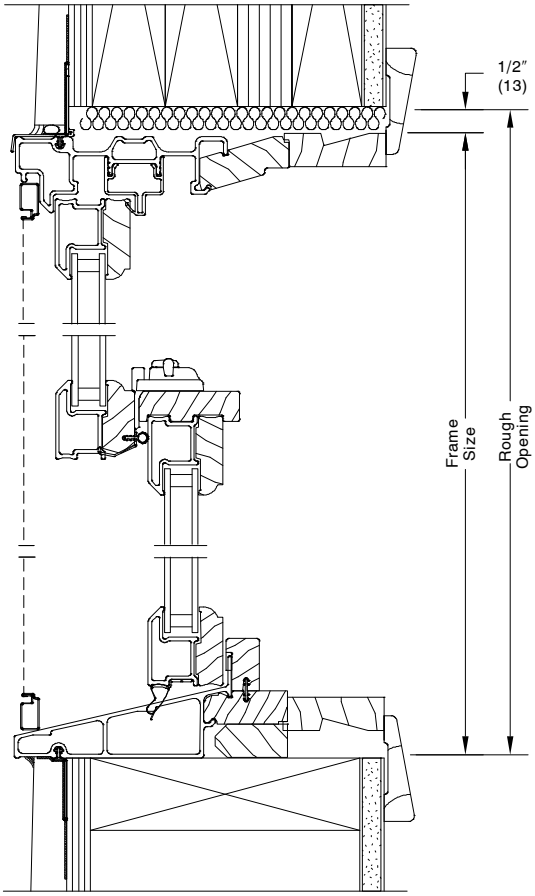

JAMB

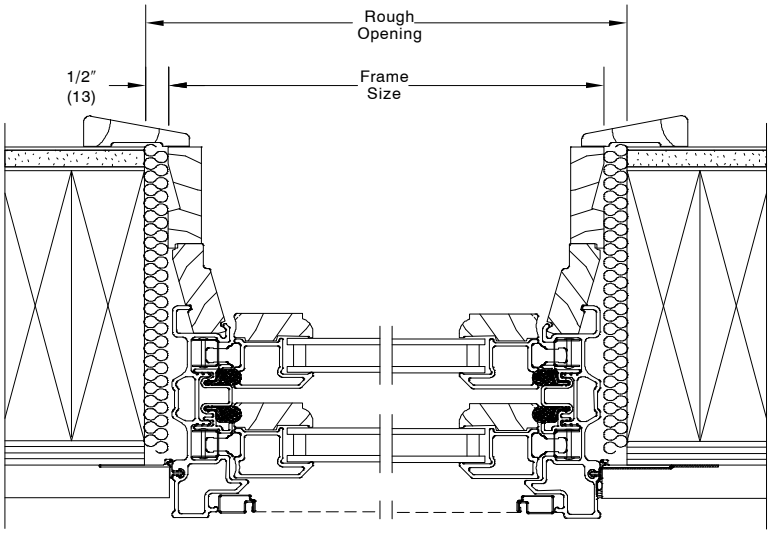

WOOD SIDING WITH 2X6 FRAME CONSTRUCTION

NOTE: The above wall sections represent typical wall conditions, these details are not intended as installation instructions. Please refer to the installation instructions provided with the purchased units.

NOTE: Double Hung Unit shown with jamb extension.

NOTE: Picture unit Installation similar.

WOOD–ULTREX DOUBLE HUNG

INSTALLATION SUGGESTIONS Scale 3″ = 1′ 0″

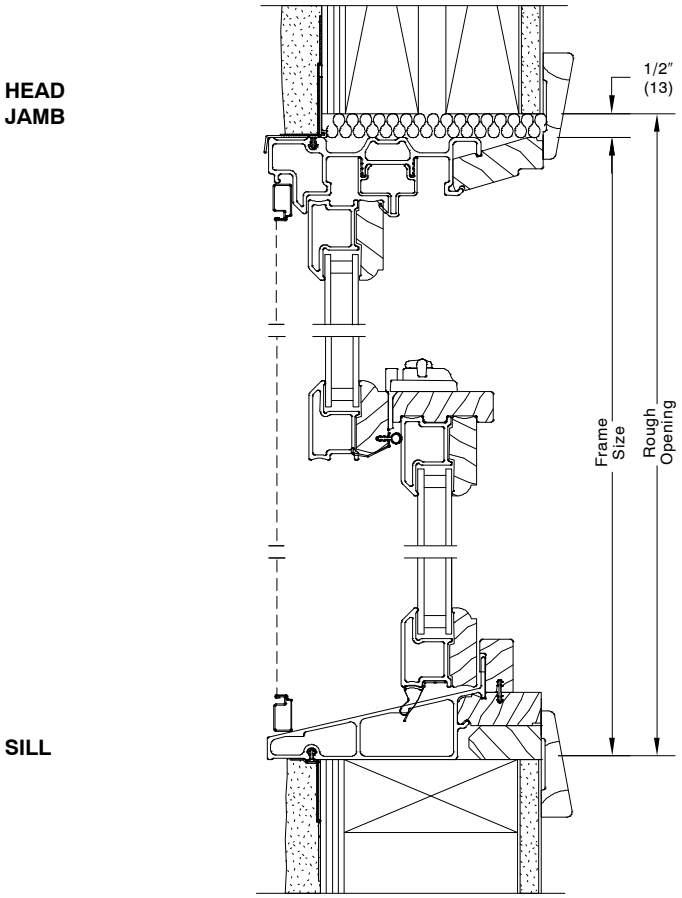

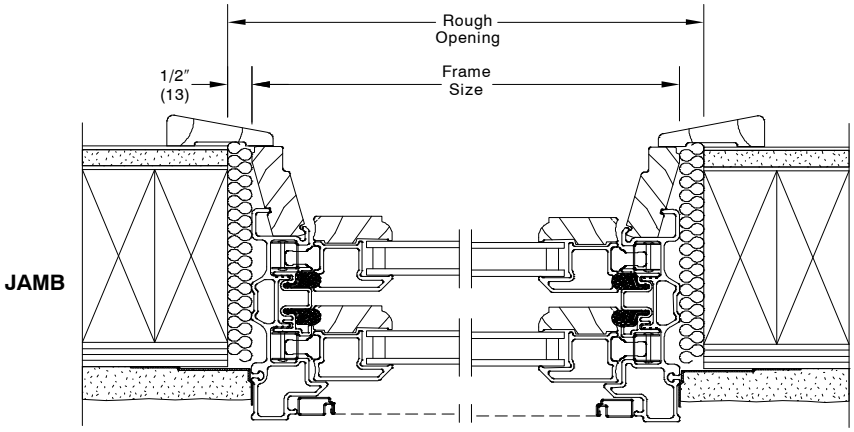

STUCCO WITH 2X4 FRAME CONSTRUCTION

NOTE: The above wall sections represent typical wall conditions, these details are not intended as installation instructions. Please refer to the installation instructions provided with the purchased units.

NOTE: Picture unit Installation similar.