CHAPTER 3A

INTEGRITY WOOD–ULTREX INSERT DOUBLE HUNG

Unit Features 3A.2
Minimum and Maximum Guidelines 3A.3
Certified Sizes 3A.4
Egress Measurement / Egress Formula 3A.5
Conversions 3A.6
Measurement Conversions: Field Measurement 3A.7
Mulling Guidelines 3A.8
Section Details – Operating – Interior Install 3A.9
Section Details – Operating – Exterior Install 3A.10
Section Details – Transoms / Pictures – Interior Install 3A.11
Section Details – Transoms / Pictures – Exterior Install 3A.12
Section Details – Mullions 3A.13
Section Details – Frame Expander 3A.14
Divided Lite Options 3A.15
Available Divided Lite Patterns 3A.16

ATTENTION:

- Specifications and technical data are subject to change without notice.
- Dimensions in parenthesis are in millimeters or square meters
- Allow 1/16″ (2) tolerance on all measurements.
- Interior mullion trim are shipped loose for field installation.
- For answers to technical questions about Integrity products you may call our Integrity Support Line: 1–800–587–2712.
- Website: www.integritywindows.com

WOOD–ULTREX INSERT DOUBLE HUNG

UNIT FEATURES

FRAME AND SASH:

The frame and sash exterior s are made of Ultrex® , an advanced fiber reinforced material that is resistant to thermal conductance. Ultrex patented coating system meets all the requirements of AAMA 624-10. Exterior colors: Stone White, Pebble Gray, Bronze, Evergreen, Cashmere, or Ebony. The interior is clear pine, kiln dried to a moisture content of 6–12% at time of fabrication. Water-repellant, preservative treated in accordance with WDMA I.S.4. Interior wood is available as Pine bare wood or factory–applied white interior finish.

Frame:

Composite frame thickness is 1 13/16″ (46). Frame width of 3 1/4″ (83). Ultrex is .080″ (2mm) thick. Includes an exterior accessory kerf and snap–in wood sill liner.

Sash:

Composite sash thickness of 1 17/32″ (39). Ultrex is .070″ (2) thick. Sash can be replaced but cannot be re–glazed.

HARDWARE:

The balance system is a coil spring block and tackle system,with nylon shoe and zinc locking clutch. Both sash tilt into the room for cleaning or removal for painting without removing the screen. High pressure zinc die cast checkrail lock and keeper. Lock employs a cam–lock mechanism. Color: Almond Frost or White. Optional Bright Brass, Oil Rubbed Bronze, and Satin Nickel available. Each sash employs spring loaded tilt latches to allow for easy tilting of sash. On units widths > 42 3/32″ (1069) and wider, two locks are mounted. Optional factory applied Window Opening Control Device is available on all sizes. A system consisting of an acetal lever housed in an acetal shell on each stile of the top sash. Finish: White, Beige. This device works in accordance to ASTM F2090–10 standard specification for window fall prevention devices with emergency escape. Optional field applied flush mounted sash lift. The material is zinc die cast and available in Almond Frost, White, Bright Brass, Satin Nickel, and Oil Rubbed Bronze finishes.

INSTALLATION:

Operator: Secure the jambs with minimum of two #8 x 3″ pan head screws. Maximum spacing of jambs not to exceed 3/16″. Secure the head jamb with either zero or two #8 x 3″ pan head screws. Picture: Secure the jambs with minimum of two #8 x 3″ pan head screws. Maximum spacing of jambs not to exceed 3/16″. Secure the head jamb with two #8 x 3″ pan head screws.

GLAZING:

All units are manufactured with an 11/16″ (17) IG with LoĒ^2–272®, LoĒ^3–366® or LoĒ–180™ coating including argon gas fill. Tempered glass and/or obscure glass are available as an option. All glass is of a select quality complying with ASTM C 1036. Insulating glass is manufactured and tested to pass level ASTM E 2190 and is IGCC certified. The glazing seal is a silicone bedding on both interior and exterior surfaces utilized in a sandwich style sash. STC/OITC values are available for 3.1/3.1 standard glass. Optional 3.1/4.7 STC/OITC Upgrade glass is available. STC and OITC ratings are tested in accordance with ASTM E 90-09. See the Product Performance chapter for values.

WEATHER STRIP:

All weather strip is beige in color. Jamb weather strip is a robust fabric covered foam weather strip that is inserted into a rigid vinyl jamb carrier and used to seal sash to jambs. An additional jamb weather strip is inserted into Ultrex/wood and seals bottom sash to jamb. Parting stop is vinyl with a flexible leaf seal to seal between the header and the upper sash. Check rail weather strip is a hollow bulb. Bottom sash weather strip is attached to the sash and interfaces against the Ultrex sill and jamb weather strip. Picture and transom units is a hollow bulb weather strip that is inserted into rigid vinyl jamb carrier and head jamb carrier to seal sash.

SCREEN:

Roll formed aluminum frame with corner key construction, color to match exterior frame color. Charcoal color fiberglass (non–corrosive) screen cloth. Spring loaded pins for installation.

REMOVABLE INTERIOR GRILLES:

Bar: Pine wood, 3/4″ (19) Available in pine bare wood or factory applied white finish. Pattern: Standard rectangular pattern.

INTERIOR / EXTERIOR SIMULATED DIVIDED LITES (SDL):

Interior bar: 7/8″ (22) wide bars. Pine bare wood or factory applied white finish, to match interior. Exterior bar: Ultrex, 7/8″ (22) wide bars, finish to match exterior. Available with or without aluminum interior spacer bar in airspace. Patterns available: rectangle, Cottage style cut, 9 lite Prairie cut or 6 lite Prairie for top sash, bottom sash, or both. ITIDHP Only: Simulated check rail option: 2 11/32″ (60). Pattern available: simulated rail in standard center or customer specified location with 7/8″ (22) patterns above, below or both in patterns of rectangular equal lite or prairie lite cut.

GRILLES–BETWEEN–THE–GLASS (GBG):

11/16″ (17) contoured aluminum bar placed between two panes of glass. Pattern: Standard rectangular pattern, or optional 6 lite per sash Prairie cut on Double Hung or 9 lite on picture units. Exterior color determined by exterior sash color. Interior: White or Bronze. GBGs are not available with Impact glazing.

NOTE: NFRC Values are now located on www.integritywindows.com

WOOD–ULTREX INSERT DOUBLE HUNG

MINIMUM AND MAXIMUM GUIDELINES

Minimum and Maximum IO Guidelines										
Unit Type	Min IO Width		Min IO Height		Max IO Width		Max IO Height		Glass Size	
	in	mm	in	mm	in	mm	in	mm	Sq. Feet	Sq. Meters
ITIDH	18 3/8	(467)	28 1/8	(714)	54 3/8	(1381)	84 1/4	(2140)	26 1/32	2.417
ITIDHT	18 3/8	(467)	16 1/8	(410)	62 3/8	(1584)	24 1/4	(616)	7 3/16	0.668
ITIDHP	18 3/8	(467)	23 5/8	(600)	58 3/8	(1483)	84 1/4	(2140)	28 21/32	2.661
ITIDHP	18 3/8	(467)	23 5/8	(600)	62 3/8	(1584)	80 1/4	(2038)	29 1/4	2.717

WOOD–ULTREX INSERT DOUBLE HUNG COLLECTION:

Wood–Ultrex Insert Double Hung: ITIDH

Wood–Ultrex Insert Double Hung Transom: ITIDHT

Wood–Ultrex Insert Double Hung Picture: ITIDHP

NOTE: Special sizes are available in 1/64″ (.40) increments, not to exceed the frame size measurement maximum or minimum in the table above.

WOOD–ULTREX INSERT DOUBLE HUNG

CERTIFIED SIZES

Product	Air Tested to psf	Water Tested to psf	Certification Rating	Design Pressure (DP)	Max Overall Width		Max Overall Height	
					in	mm	in	mm
ITIDH	1.57	6.06	LC–PG40–H	DP40	42 3/32	(1069)	84	(2134)
ITIDH	1.57	5.3	LC–PG35–H	DP35	54	(1372)	84	(2134)
ITIDHT	1.57	6.06	LC–PG40–FW	DP40	62	(1575)	24	(610)
ITIDHP	1.57	6.06	LC–PG40–FW	DP40	58	(1473)	84	(2134)
ITIDHP	1.57	6.06	LC–PG40–FW	DP40	62	(1575)	80	(2032)

EGRESS MEASUREMENT / EGRESS FORMULA

Integrity Insert Double Hung Egress Unit Minimum Opening Conversion From Frame Size		
Minimum Value for Net Clear Opening	**Desired Dimension**	**Formula**
20 Inches	Egress Opening Width (Inches)	= Frame OM Width – 3.656
24 Inches	Egress Opening Height (Inches)	= (Frame OM Height/2) – 5.188
5.7 Square Feet	Egress Opening Area (SQFT)	= (Egress Width x Egress Height) / 144

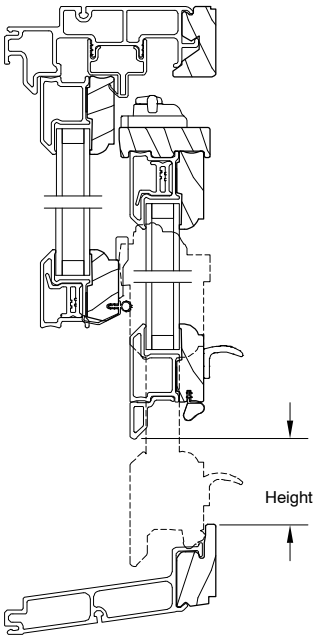

Head Jamb and Sill

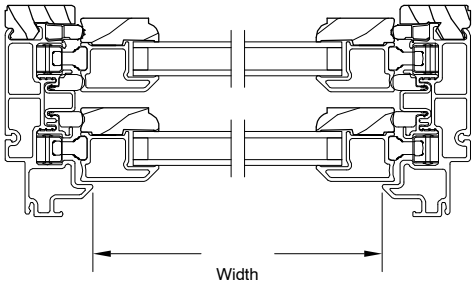

Jamb

Wood–Ultrex Insert Double Hung Operating Unit – 8 Degree Sill						
Unit Measurements		Width		Height		
From	To					
Daylight Opening		**in**	**mm**		**in**	**mm**
Daylight Opening	Bottom Sash OM	+ 3 1/4	(83)		+ 3 1/4	(83)
Daylight Opening	Top Sash OM	+ 3 1/4	(83)		+ 3 1/4	(83)
Daylight Opening	Glass OM	+ 1 1/16	(27)		+ 1 1/16	(27)
Daylight Opening	Screen OM	+ 3 7/8	(98)	X 2	+ 7 9/32	(185)
Daylight Opening	Grille	order by DLO		order by DLO		
Inside Opening		**in**	**mm**		**in**	**mm**
Inside Opening	Bottom Sash OM	–3 17/32	(90)	÷ 2	–1 1/8	(29)
Inside Opening	Top Sash OM	–3 17/32	(90)	÷ 2	–1 1/8	(29)
Inside Opening	Daylight Opening	–6 25/32	(172)	÷ 2	–4 3/8	(111)
Inside Opening	Glass OM	–5 23/32	(145)	÷ 2	–3 5/16	(84)
Inside Opening	Screen OM	–2 29/32	(74)		–1 15/32	(37)
Inside Opening	Frame OM @ Interior	–3/8	(10)		–1/4	(06)
Inside Opening	Frame OM @ Exterior	–3/8	(10)		+ 3/8	(10)

Wood–Ultrex Insert Double Hung Transoms / Pictures – 8 Degree Sill					
Unit Measurements		Width		Height	
From	To				
Daylight Opening		**in**	**mm**	**in**	**mm**
Daylight Opening	Sash OM	+ 3 1/4	(83)	+ 3 1/4	(83)
Daylight Opening	Glass OM	+ 1 1/16	(27)	+ 1 1/16	(27)
Daylight Opening	Grille	order by DLO		Order by DLO	
Inside Opening		**in**	**mm**	**in**	**mm**
Inside Opening	Sash OM	-3 15/32	(88)	-3 3/16	-(81)
Inside Opening	Daylight Opening	-6 23/32	(171)	-6 7/16	(163)
Inside Opening	Glass OM	-5 21/32	(144)	-5 3/8	(137)
Inside Opening	Frame OM @ Interior	-3/8	(10)	-1/4	(06)
Inside Opening	Frame OM @ Exterior	-3/8	(10)	+ 3/8	(10)

NOTE: IO to Frame Size Height Conversion chart is on Field Measurement page

WOOD–ULTREX INSERT DOUBLE HUNG

MEASUREMENT CONVERSIONS – FIELD MEASUREMENT

Conversion from Field Measurement to Frame OM		
Width		
Condition	Formula	
If blind stop width is 1/2 inch or less	ITIDH frame OM width = inside opening width – 0.375	
Height		
Condition	Type of Sill	Formula
If old sill angle is 8 degrees or more but less than 14 degrees	8 degree sill	ITIDH frame OM height = inside opening height + 0.375

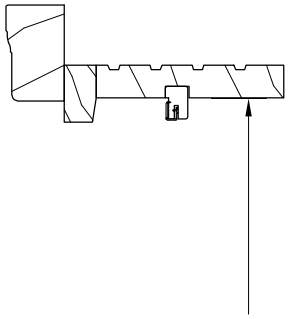

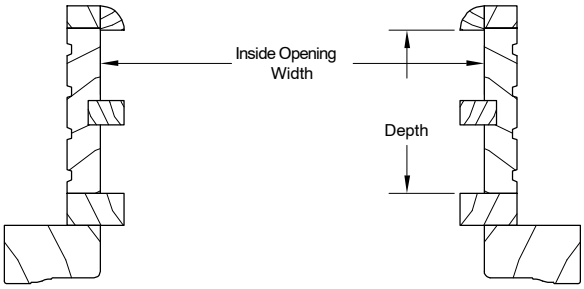

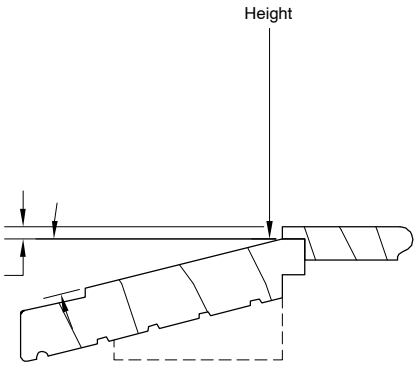

Wood–Ultrex Insert Double Hung		
Inside Opening to Frame Size at Exterior		
Existing Sill Angle	Conversions	
8° and greater	3/8	(10)
7°	5/16	(8)
6°	3/16	(5)
5°	1/8	(3)
4°	1/16	(2)
3°	0	(0)
2°	– 1/8	(3)
1°	– 3/16	(5)
0°	– 1/4	(6)

WOOD–ULTREX INSERT DOUBLE HUNG

MULLING GUIDELINES

Multiple assemblies can be factory mulled: up to 5 units wide by 1 unit high

MAXIMUM INSIDE OPENING not to exceed 112 7/8″ (2867) X 84 1/4″ (2140)

NOTE: Field mulling beyond the above limitations is not recommended

Calculating Total Inside Opening for Assemblies

WIDTH: ADD Frame Widths + 3/8″ (10)

Tolerance = 3/16″ (10) from frame to Inside Opening at left and right jamb.

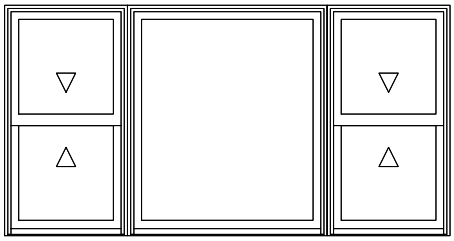

3 Units Wide 1 Unit High

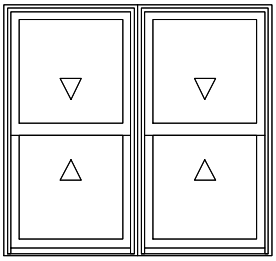

2 Units Wide 1 Unit High

SECTION DETAILS: OPERATING SCALE: 3″ = 1′0″

Interior Install

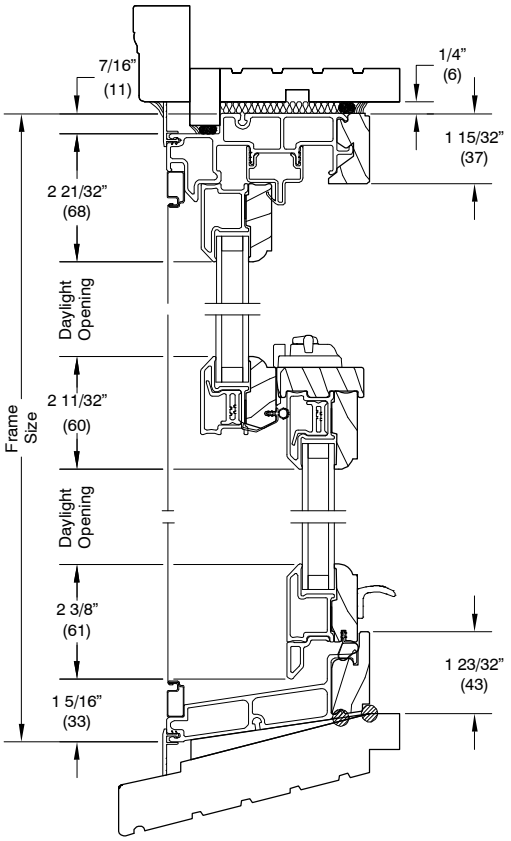

Head Jamb and Sill
8 Degree Bevel Sill
Installed in Existing Frame

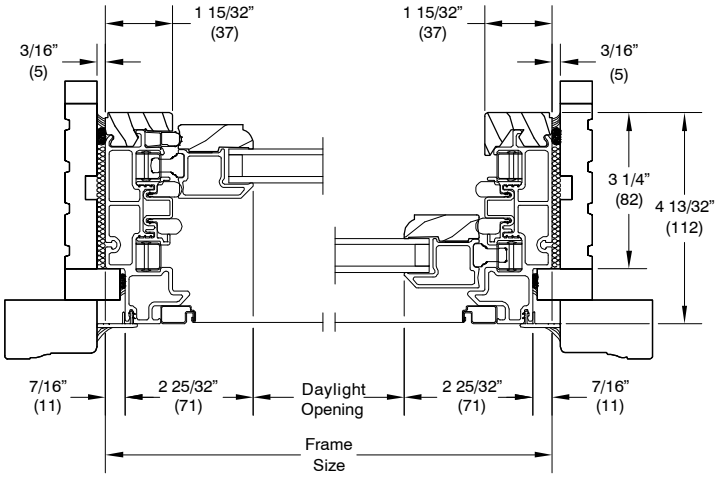

Jamb
Installed in Existing Frame

SECTION DETAILS: OPERATING SCALE: 3″ = 1′0″

Exterior Install

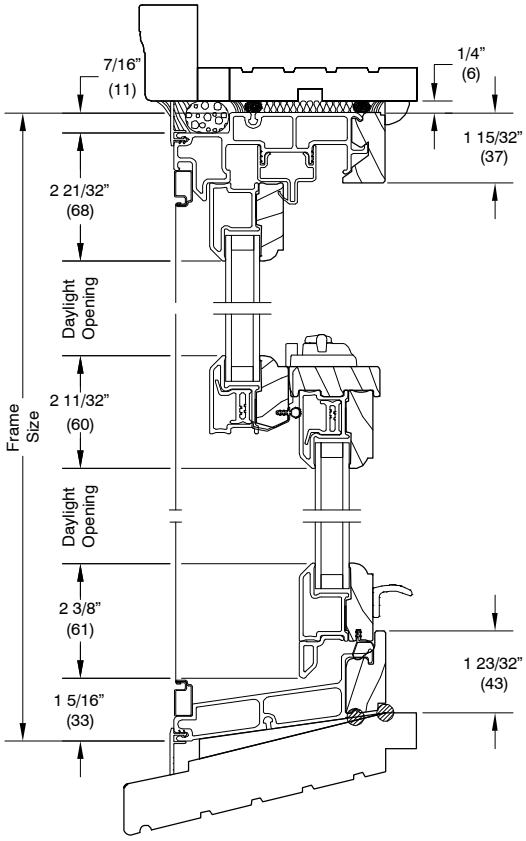

Head Jamb and Sill
8 Degree Bevel Sill
Installed in Existing Frame

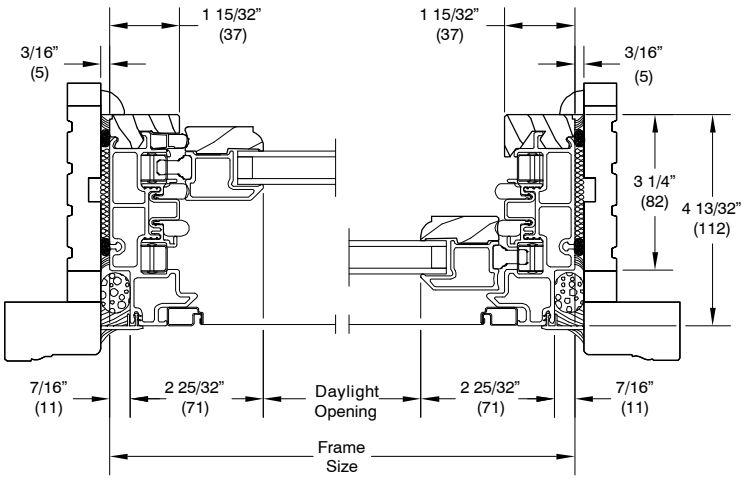

Jamb
Installed in Existing Frame

SECTION DETAILS: PICTURE/TRANSOM SCALE: 3″ = 1′0″

Interior Install

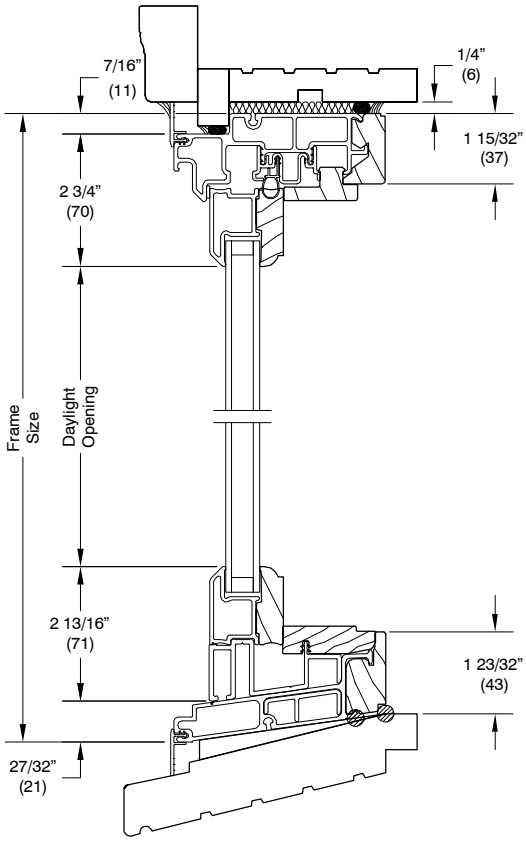

Head Jamb and Sill
8 Degree Bevel Sill
Installed in Existing Frame

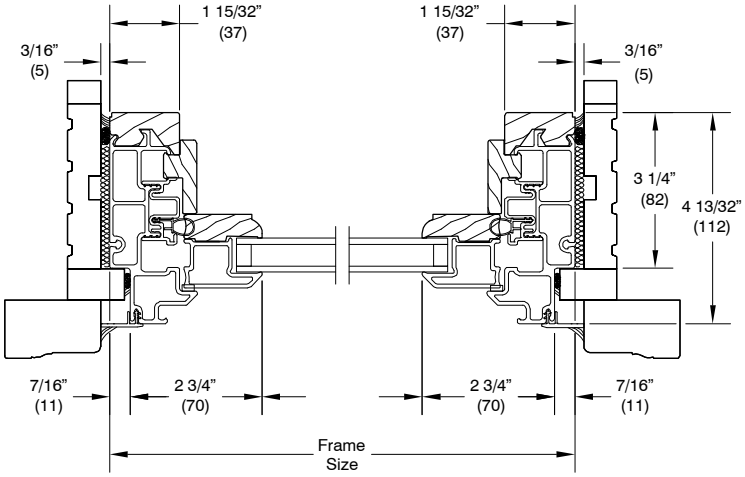

Jamb
Installed in Existing Frame

SECTION DETAILS: PICTURE/TRANSOM SCALE: 3″ = 1′0″

Exterior Install

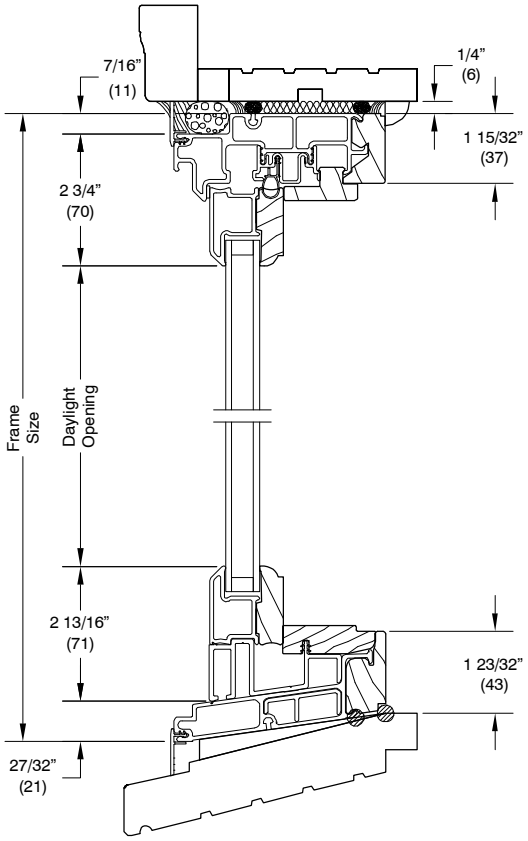

Head Jamb and Sill
8 Degree Bevel Sill
Installed in Existing Frame

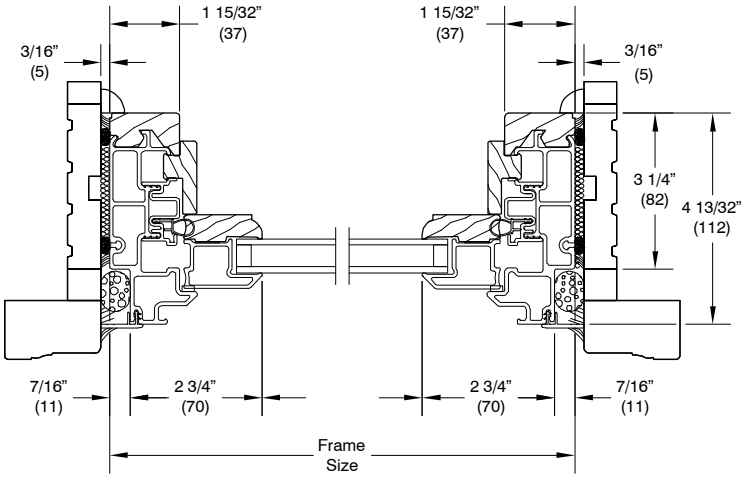

Jamb
Installed in Existing Frame

WOOD–ULTREX INSERT DOUBLE HUNG

SECTION DETAILS – MULLIONS SCALE: 3″ = 1′0″

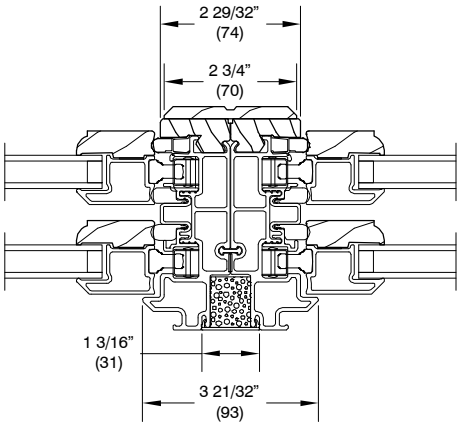

Operator/Operator
Wood Ultrex Insert Double Hung

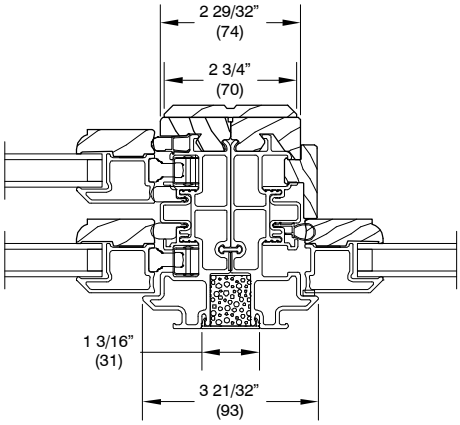

Operator/Picture
Wood Ultrex Insert Double Hung

SECTION DETAILS – FRAME EXPANDER SCALE: 3″ = 1′0″

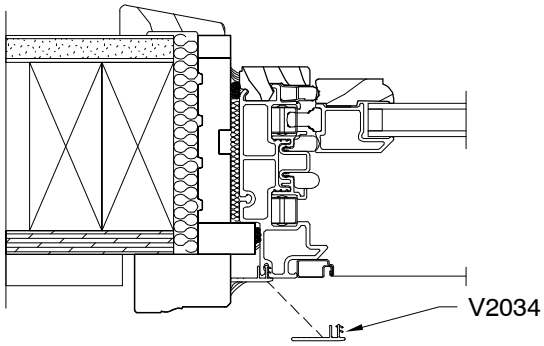

Jamb Frame Expander

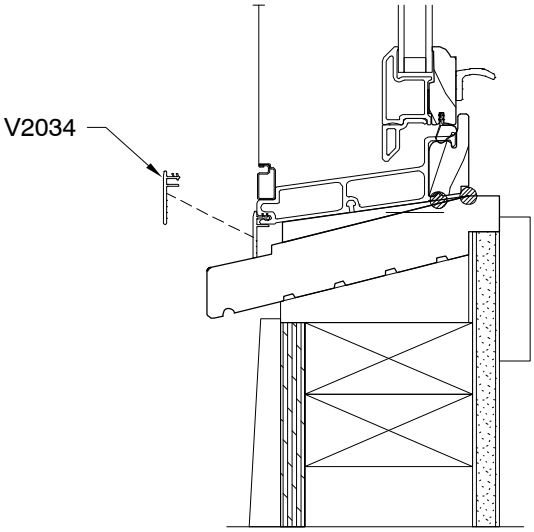

Sill Frame Expander

WOOD–ULTREX INSERT DOUBLE HUNG

DIVIDED LITE OPTIONS Not to Scale

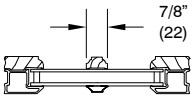

Simulated Divided Lite

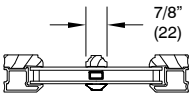

Simulated Divided Lite w/Spacer Bar

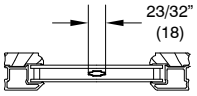

Aluminum Grille Between Glass

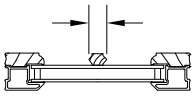

Wood Removable Grill

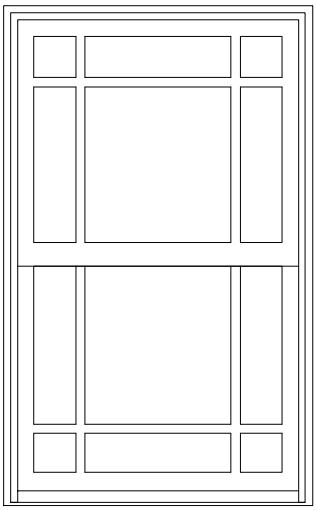

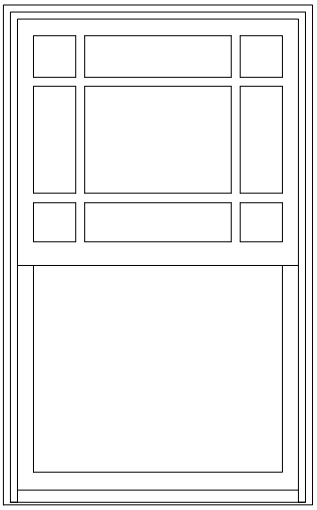

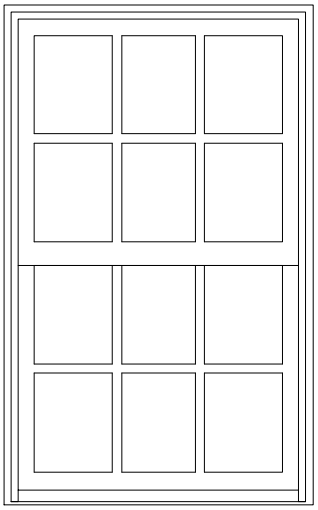

* Optional 6 lite Prairie cut for GBG or SDL.

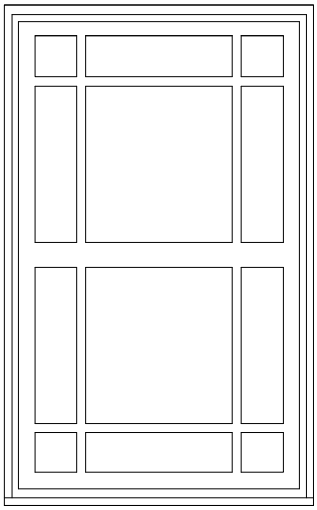

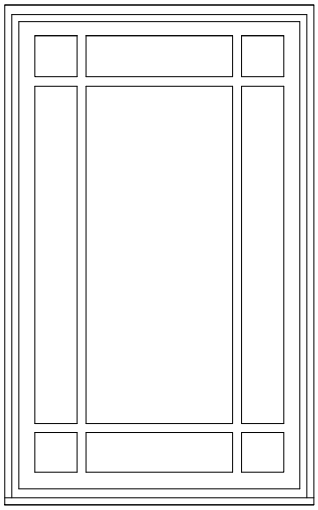

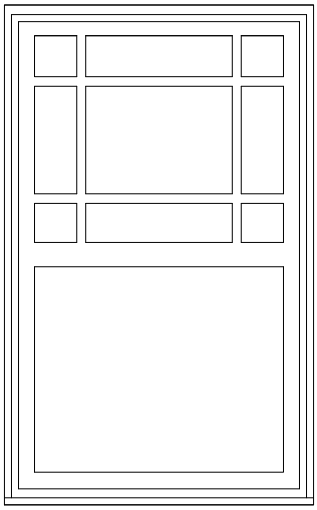

* Optional 9 lite Prairie cut for GBG or SDL.

NOTE: 4″ (102) DLO lite cut minimum for 7/8″ (22) pattern

DIVIDED LITE OPTIONS

Insert Double Hung SDL, GBG, Grille Equal Lite Cut						
Product	Width			Height		
	Frame Width		Lite Cut Pattern	Frame Height		Lite Cut Pattern
	in	mm		in	mm	
ITIDH	18	(457)	2W	28 1/2	(724)	2H
	26 3/32	(663)	3W	72 1/2	(1842)	3H
	38 3/32	(968)	4W			
	50 3/32	(1272)	5W			
ITIDHP	18	(457)	2W	16 1/2	(419)	1H
	26 3/32	(663)	3W	24 1/2	(622)	2H
	38 3/32	(968)	4W	28 1/2	(724)	4H
	50 3/32	(1272)	5W	72 1/2	(1842)	6H
	62	(1575)	6W			

NOTE: When frame width or height are between two sizes, refer to the smaller size shown for the default lite cut pattern.