CHAPTER 4

INTEGRITY WOOD–ULTREX GLIDER (ITGL)
INTEGRITY WOOD–ULTREX TRIPLE SASH (ITGLTS)

Unit Features 4.2
NFRC Values 4.3
Egress, Lite and Vent Measurements 4.4
Sizing Guidelines / Measurement Conversions / Minimum and Maximum Guidelines 4.6
Elevations – 1–Wide and 2–Wide 4.7
Elevations – Triple Sash Units 4.8
Section Details 4.9
Section Details Triple Sash 4.10
Section Details Mullions 4.11
Divided Lite Options 4.12
Available Divided Lite Patterns 4.14
Installation Suggestions 4.16

ATTENTION:

- Specifications and technical data are subject to change without notice.
- Allow 1/16″ (1.59 mm) tolerance on all measurements.
- Interior mullion trim is shipped loose for field installation.
- For answers to technical questions about Integrity products you may call our Integrity Support Line: 1–800–587–2712.
- Website: www.integritywindows.com

WOOD–ULTREX GLIDER

UNIT FEATURES

FRAME:

The frame is made of Ultrex®, an advanced fiber reinforced material that is exceptionally resistant to thermal conductance. Ultrex patented coating system meets all the requirements of AAMA 623-10. Exterior coating shall meet AAMA 623–10 and 00022716 in stone white, pebble gray, bronze, evergreen, cashmere, and ebony. The interior is clear pine, kiln dried to a moisture content of 6–12% at time of fabrication. Water–repellent, preservative treated in accordance with WDMA I.S.4. Composite frame thickness is 1 1/16″ (27 mm). Frame width of 4 9/16″ (116 mm). Flat bottom sill with 13 degree bevel. 4/4 clear pine interior frame liner is applied to all units. Interior wood is available as Pine bare wood or factory applied white interior finish. Ultrex is .075″ (2mm) thick. Available in stone white, pebble gray, bronze, evergreen, cashmere, or ebony colors.

SASH:

The sash exterior is made of Ultrex, an advanced fiber reinforced material that is exceptionally resistant to thermal conductance. The interior is clear pine, kiln dried to a moisture content of 6-12% at time of fabrication. Water–repellent, preservative treated in accordance with WDMA I.S.4. Composite thickness of 1 1/2″ (38 mm). Ultrex is .070″ (2 mm) thick. Available in stone white, pebble gray, bronze, evergreen, cashmere, or ebony colors. Standard operation is XO as viewed from the exterior. OX operation is available. Operator sash is removable. Integral, full height accent pull on operating sash.

JAMB EXTENSION:

6 9/16″ (167 mm) and 6 13/16″ (173 mm) jamb extension available factory applied or in lineal lengths for field application. ADD 1/4″ to width and 1/8″ to height of frame, rough, and masonry opening sizes.

HARDWARE:

Meeting stile lock and keeper are of a high pressure zinc die cast with heavy gauge steel lock base. Lock employs a cam–lock mechanism. Lock and keeper are available in Almond Frost or White color finish, optional Bright Brass, Satin Nickel, Oil Rubbed Bronze finish are available. Two locks on units with a frame height greater then 41 3/4″ (1060). Each sash employs spring loaded tilt latches to allow for easy removal of the sash. Tilt latch is color matched to stile lock.

INSTALLATION:

Factory applied folding nailing fin and drip cap system. Optional installation brackets for masonry available. Optional through jamb installation method with brackets on Non-Impact units only. Factory supplied field mulling kits are available for standard assemblies.

GLAZING:

All units are manufactured with an 11/16″ (17mm) IG with LoĒ^2–272®, LoĒ^3–366® or LoĒ–180™ coatings including argon gas fill. Tempered glass and/or obscure glass are available as an option. All glass is of a select quality complying with ASTM C 1036. Insulating glass is manufactured and tested to pass level ASTM E 2190 and is IGCC certified. The glazing seal is a silicone bedding on both interior and exterior surfaces utilized in a sandwich style sash. STC/OITC values are available for 3.1/3.1 standard glass. Optional 3.1/4.7 STC/OITC Upgrade glass is available. STC and OITC ratings are tested in accordance with ASTM E 90-09. See the Product Performance chapter for values.

WEATHER STRIP:

All weather strip except the foam gasket is beige. The foam gasket is a neutral gray color. All units have full perimeter frame weather strip. The sash is sealed to the jambs and header using a robust fabric foam weather strip. A hollow bulb type weather strip seals the operator and stationary sash/jamb interface. Rigid vinyl interlock seals between the stationary sash and operator sash. A pile weather strip seals the bottom of the meeting stile interface.

SCREEN:

Rolled formed aluminum frame with corner key construction, aluminum to match exterior Ultrex color. Charcoal color fiberglass (non-corrosive) screen cloth. Factory installed half screen that can be removed from the interior. Spring loaded pins for installation.

REMOVABLE INTERIOR GRILLES:

Bar: Pine wood, 3/4″ (19 mm) Available in Pine bare wood or factory applied white finish. Pattern: Standard rectangular pattern.

INTERIOR / EXTERIOR SIMULATED DIVIDED LITES (SDL):

Interior bar: 7/8″ (22 mm) wide bars. Pine bare wood or factory applied white finish, to match interior. Exterior bar: Ultrex, 7/8″ (22 mm) wide bars, finish to match exterior. Patterns available: rectangle, 9 lite Prairie cut or Cottage style cut. Simulated check rail option: 2 11/32” (60). Patterns available: simulated rail in standard center or customer specified location with 7/8″ pattern above, below or both in pattern of rectangular equal lite or prairie lite cuts.

GRILLES–BETWEEN–THE–GLASS (GBG):

11/16″ (17 mm) contoured aluminum bar placed between two panes of glass. Pattern: Standard rectangular pattern, or optional 9 lite per sash Prairie cut. Exterior color is determined by frame color. White interior.

EXTERIOR CASING:

Non–integral to the unit. Fastened to the exterior wall with barb and kerf 2” brick mould as a full surround or with sill nosing. 3 ½” flat casing available as full surround or with sill nosing. Also available with 1” ranch style sill and header overhang.

This page intentionally left blank.
NFRC Values are now located on www.integritywindows.com.

EGRESS, LITE, AND VENT MEASUREMENTS

EGRESS MEASUREMENTS

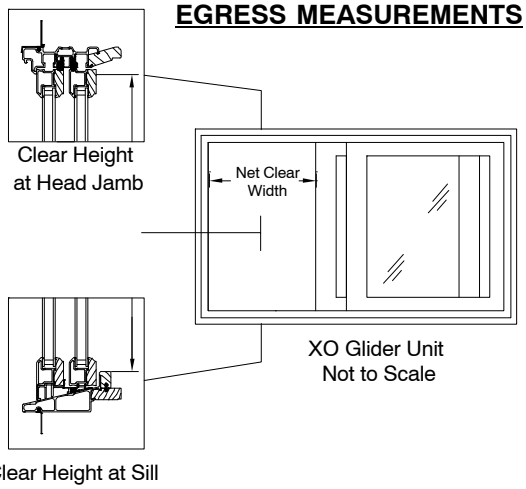

Code restrictions may vary depending on your local building codes.
For additional information contact your local code department for IBC and IRC requirements.

Egress for Special Sizes			
Minimum Value for Net Clear Opening		Desired Dimension	Formula
XO/OX GLIDER			
20 inches	508 mm	Egress Opening Width (inches)	=[Frame OMW / 2] – 3.625″
24 inches	610 mm	Egress Opening Height (inches)	=Frame OMH – 4.177″
5.7 – Square. Feet		Egress Opening Area (Sq. Ft.)	= [Egress Width x Egress Height] / 144
XOX GLIDER			
20 inches	508 mm	Egress Opening Width (inches)	=[Frame OMW / 4] – 2.200″
24 inches	610 mm	Egress Opening Height (inches)	=Frame OMH – 4.177″
5.7 – Square. Feet		Egress Opening Area (Sq. Ft.)	= [Egress Width x Egress Height] / 144

EGRESS, LITE, AND VENT MEASUREMENTS								
UNIT #	**DAYLIGHT OPENING WIDTH PER SASH**	**DAYLIGHT OPENING HEIGHT PER SASH**	**LITE Sq. ft**	**VENT Sq. ft**	**EGRESS WIDTH**	**EGRESS HEIGHT**	**EGRESS Sq. ft**	**FLOOR TO BOTTOM OF CLEAR OPENING**
GLIDER								
ITGL 3624	13 11/16″	17 11/16″	3.36	1.92	14.13	19.57	1.92	60.73
3636	13 11/16″	29 11/16″	5.64	3.10	14.13	31.57	3.10	48.73
3642	13 11/16″	35 11/16″	6.78	3.69	14.13	37.57	3.69	42.73
3648	13 11/16″	41 11/16″	7.93	4.27	14.13	43.57	4.27	36.73
3660	13 11/16″	53 11/16″	10.21	5.45	14.13	55.57	5.45	24.73
4824	19 11/16″	17 11/16″	4.84	2.74	20.13	19.57	2.74	60.73
4836	19 11/16″	29 11/16″	8.12	4.41	20.13	31.57	4.41	48.73
4842	19 11/16″	35 11/16″	9.76	5.25	20.13	37.57	5.25	42.73
4848E	19 11/16″	41 11/16″	11.40	6.09	20.13	43.57	6.09	36.73
4860E	19 11/16″	53 11/16″	14.68	7.77	20.13	55.57	7.77	24.73
6024	25 11/16″	17 11/16″	6.31	3.55	26.13	19.57	3.55	60.73
6036E	25 11/16″	29 11/16″	10.59	5.73	26.13	31.57	5.73	48.73
6042E	25 11/16″	35 11/16″	12.73	6.82	26.13	37.57	6.82	42.73
6048E	25 11/16″	41 11/16″	14.87	7.91	26.13	43.57	7.91	36.73
6060E	25 11/16″	53 11/16″	19.15	10.08	26.13	55.57	10.08	24.73
7224	31 11/16″	17 11/16″	7.78	4.37	32.13	19.57	4.37	60.73
7236E	31 11/16″	29 11/16″	13.07	7.04	32.13	31.57	7.04	48.73
7242E	31 11/16″	35 11/16″	15.71	8.38	32.13	37.57	8.38	42.73
7248E	31 11/16″	41 11/16″	18.35	9.72	32.13	43.57	9.72	36.73
7260E	31 11/16″	53 11/16″	23.63	12.40	32.13	55.57	12.40	24.73

NOTE: 6036 and 7236 will meet national egress if the sill height is within 44” of the floor. Code restrictions may vary depending on local building codes.

EGRESS, LITE, AND VENT MEASUREMENTS

EGRESS, LITE, AND VENT MEASUREMENTS								
UNIT #	DAYLIGHT OPENING WIDTH PER SASH	DAYLIGHT OPENING HEIGHT PER SASH	LITE Sq. ft	VENT Sq. ft	EGRESS WIDTH	EGRESS HEIGHT	EGRESS Sq. ft	FLOOR TO BOTTOM OF CLEAR OPENING
GLIDER TRIPLE SASH								
ITGLTS 7224	33 11/16″	17 11/16″	7.50					
Flankers	13 11/16″	17 11/16″	3.36	4.26	15.68	19.57	2.13	60.73
ITGLTS 7236	33 11/16″	29 11/16″	12.59					
Flankers	13 11/16″	29 11/16″	5.64	6.87	15.68	31.57	3.44	48.73
7242	33 11/16″	35 11/16″	15.13					
Flankers	13 11/16″	35 11/16″	6.78	8.18	15.68	37.57	4.09	42.73
ITGLTS 7248	33 11/16″	41 11/16″	17.68					
Flankers	13 11/16″	41 11/16″	7.93	9.49	15.68	43.57	4.74	36.73
7260	33 11/16″	53 11/16″	22.77					
Flankers	13 11/16″	53 11/16″	10.21	12.10	15.68	55.57	6.05	24.73
ITGLTS 8424	39 11/16″	17 11/16″	8.97					
Flankers	16 11/16″	17 11/16″	4.1	5.08	18.68	19.57	2.54	60.73
8436	39 11/16″	29 11/16″	15.06					
Flankers	16 11/16″	29 11/16″	6.88	8.19	18.68	31.57	4.09	48.73
ITGLTS 8442	39 11/16″	35 11/16″	18.11					
Flankers	16 11/16″	35 11/16″	8.27	9.75	18.68	37.57	4.87	42.73
8448	39 11/16″	41 11/16″	21.15					
Flankers	16 11/16″	41 11/16″	9.66	11.30	18.68	43.57	5.65	36.73
ITGLTS 8460	39 11/16″	53 11/16″	27.24					
Flankers	16 11/16″	53 11/16″	12.44	14.41	18.68	55.57	7.21	24.73
9624	45 11/16″	17 11/16″	10.45					
Flankers	19 11/16″	17 11/16″	4.84	5.89	21.68	19.57	2.95	60.73
ITGLTS 9636	45 11/16″	29 11/16″	17.54					
Flankers	19 11/16″	29 11/16″	8.12	9.50	21.68	31.57	4.75	48.73
9642	45 11/16″	35 11/16″	21.08					
Flankers	19 11/16″	35 11/16″	9.76	11.31	21.68	37.57	5.66	42.73
ITGLTS 9648	45 11/16″	41 11/16″	24.63					
Flankers E	19 11/16″	41 11/16″	11.40	13.12	21.68	43.57	6.56	36.73
9660	45 11/16″	53 11/16″	31.71					
Flankers E	19 11/16″	53 11/16″	14.68	16.73	21.68	55.71	8.36	24.73

WOOD–ULTREX GLIDER

SIZING GUIDELINES / MEASUREMENT CONVERSIONS / MINIMUM AND MAXIMUM GUIDELINES

Multiple assemblies can be factory mulled:

up to 3 units wide by 1 unit high

MAXIMUM ROUGH OPENING: not to exceed113 1/2″ (2883 mm) 60 1/4″ (1530 mm)

Individual or mulled units with jamb extension: ADD 1/4″ to WIDTH. and 1/8″ to HEIGHT of Frame, Rough, and Masonry Opening sizes. 6 9/16″ (167 mm) and 6 13/16 (173 mm) jamb extension available factory applied or in lineal lengths for field application.

CALCULATING TOTAL ROUGH OPENING FOR ASSEMBLIES

WIDTH: ADD Frame Widths + 1″ (25 mm)

Tolerance = 1/2″ (13 mm) from frame to Rough Opening at left and right jamb.

HEIGHT: ADD Frame Heights + 1/2″ (13 mm)

Tolerance = 1/2″ (13 mm) from Frame to Rough Opening at head jamb.

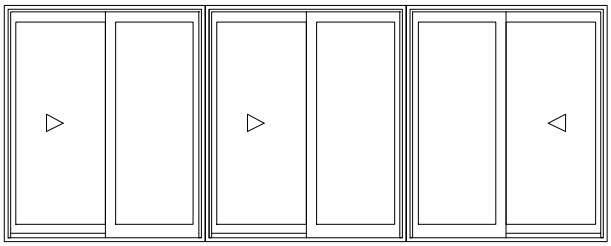

3 Units Wide 1 Unit High

MEASUREMENT CONVERSIONS				
GLIDER	**WIDTH**		**HEIGHT**	
Rough Opening to	**Imperial**	**Metric**	**Imperial**	**Metric**
Masonry Opening	– 1/2″	– 13 mm	– 1/4″	– 6 mm
OM of Frame	– 1″	– 25 mm	– 1/2″	– 13 mm
OM Sash	(÷ 2) – 1 5/16″	(÷ 2) – 33 mm	– 3 5/16″	– 33 mm
Daylight Opening	(÷ 2) – 4 9/16″	(÷ 2) – 116 mm	– 6 9/16″	– 167 mm
Om of Glass	(÷ 2) – 3 1/2″	(÷ 2) – 89 mm	– 5 1/2″	– 140 mm
OM of Screen	(÷ 2) – 2 3/4″	(÷ 2) – 70 mm	– 3″	– 76 mm

For Triple Sash conversions, RO to Glass, Sash, and Screens, please contact the Integrity Support Line (1–800–587–2712).

Minimum and Maximum Guidelines – Wood – Ultrex Glider												
Unit Type	**Min Unit Size**						**Max Unit Size**					
	CN	in	mm	x	in	mm	**CN**	in	mm	x	in	mm
OX/XO ITGL	3624	36 1/2″	(927)	x	24 1/4″	(616)	7260	72 1/2″	(1841)	x	60 1/4″	(1530)
XOX ITGLTS	7224	72 1/2″	(1841)	x	24 1/4″	(616)	9660	96 1/2″	(2451)	x	60 1/4″	(1530)

WOOD–ULTREX GLIDER

ELEVATIONS – 1–WIDE and 2–WIDE, NOT TO SCALE

Mas. Opg.	3–0 (914)	4–0 (1219)	5–0 (1524)	6–0 (1829)	5–11 1/2 (1816)	7–11 1/2 (2426)
Rgh. Opg.	3–0 1/2 (927)	4–0 1/2 (1232)	5–0 1/2 (1537)	6–0 1/2 (1842)	6–0 (1829)	8–0 (2438)
Frame Size	2–11 1/2 (902)	3–11 1/2 (1207)	4–11 1/2 (1511)	5–11 1/2 (1816)	5–11 (1803)	7–11 (2413)

OPERATION

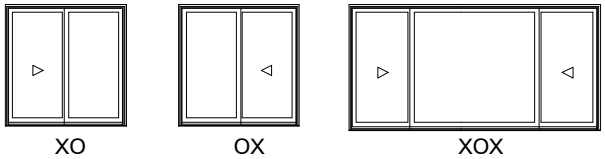

XO, OX or XOX operating units available.
All units viewed from exterior.
O = Stationary Sash
X = Operating Sash

NOTE: E = Meets National Egress Code. Local codes may vary.

NOTE: When ordering 6 9/16″ jambs, add 1/4″, to width and 1/8″ to height for Rough Opening, Frame Size, and Masonry Opening.

NOTE: Light Patterns: One lite is standard. Rectangular and Prairie Lite Pattern, optional.

TRIPLE SASH UNITS

Mas. Opg. / Rgh. Opg. / Frame Size	6–0 (1829) / 6–0 1/2 (1842) / 5–11 1/2 (1816)	7–0 (2134) / 7–0 1/2 (2146) / 6–11 1/2 (2121)	8–0 (2438) / 8–0 1/2 (2451) / 7–11 1/2 (2426)
2–0 (610) / 2–0 1/4 (616) / 1 3/4 (603)	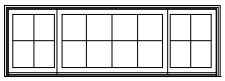 ITGL7224	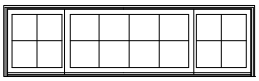 ITGL8424	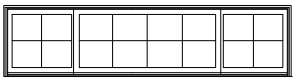 ITGLTS9624
3–0 (914) / 3–0 1/4 (921) / 2 11 3/4 (908)	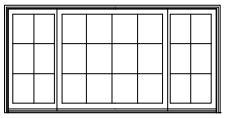 ITGL7236	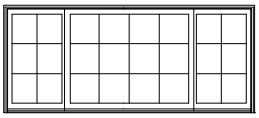 ITGL8436	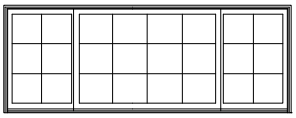 ITGLTS9636
3–6 (1067) / 3–6 1/4 (1073) / 3–5 3/4 (1060)	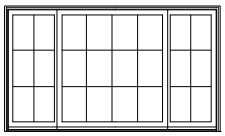 ITGL7242	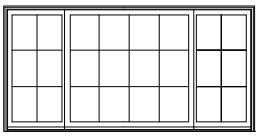 ITGL8442	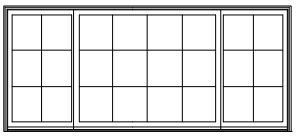 ITGLTS9642
4–0 (1219) / 4–0 1/4 (1226) / 3–11 3/4 (1213)	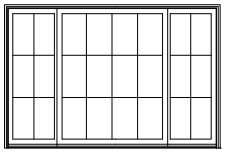 ITGL7248	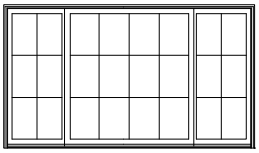 ITGL8448	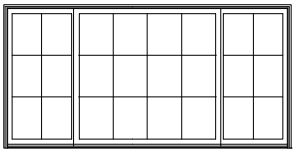 ITGLTS9648E
5–0 (1524) / 5–0 1/4 (1530) / 4–11 3/4 (1518)	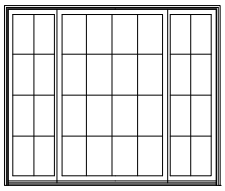 ITGL7260	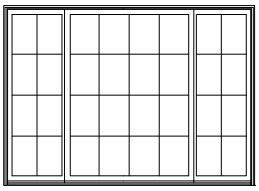 ITGL8460	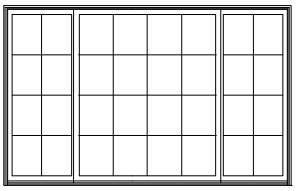 ITGLTS9660E
Mas. Opg. / Rgh. Opg. / Frame Size			

NOTE: E = Meets National Egress Code. Local codes may vary.

NOTE: When ordering 6 9/16″ jambs, add 1/4″, to width and 1/8″ to height for Rough Opening, Frame Size, and Masonry Opening.

NOTE: Light Patterns: One lite is standard. Rectangular and Prairie Lite Pattern, optional.

WOOD–ULTREX GLIDER

SECTION DETAILS Scale 3″ = 1′ 0″

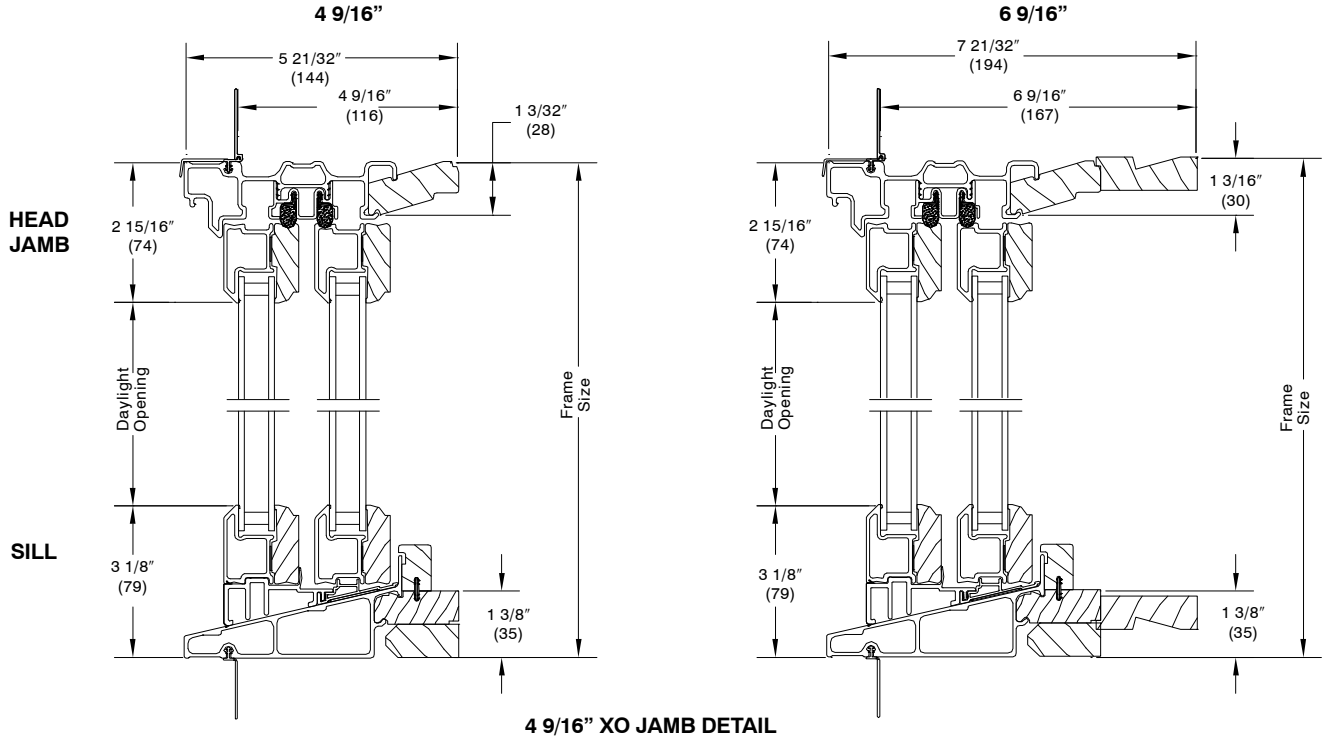

4 9/16” XO JAMB DETAIL

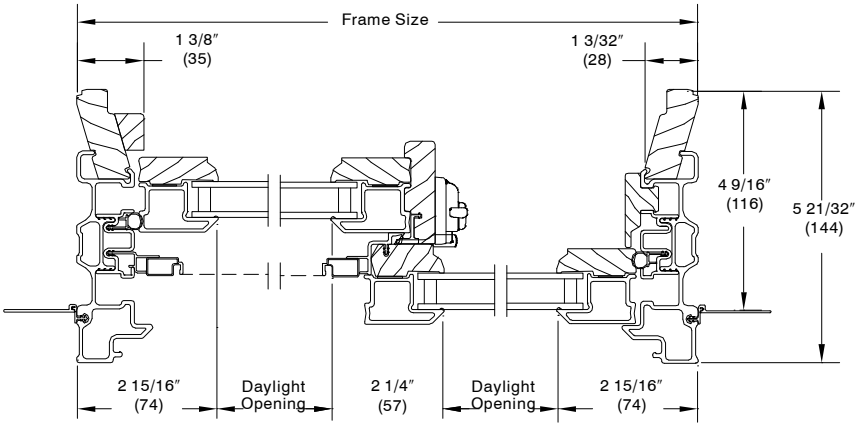

6 9/16” XO JAMB DETAIL

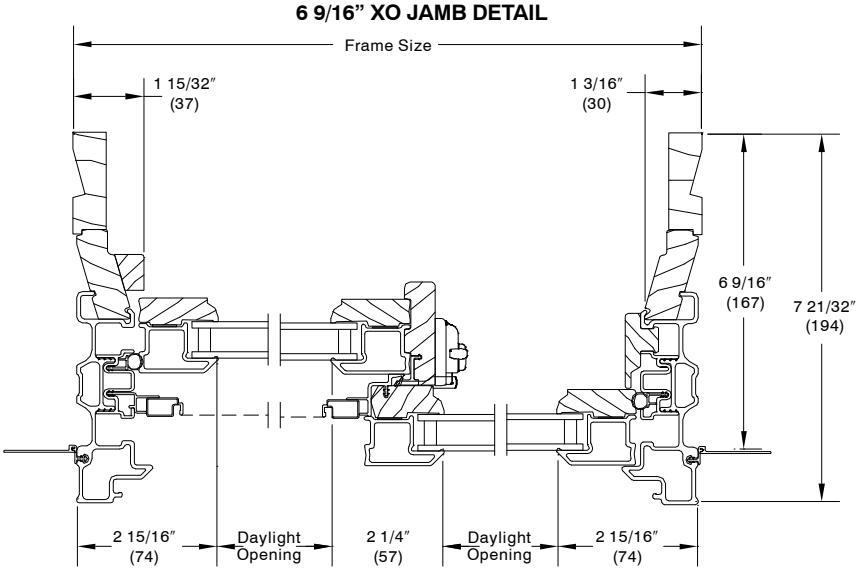

SECTION DETAILS – TRIPLE SASH Scale 3″ = 1′ 0″

4 9/16” TRIPLE SASH XOX JAMB DETAIL

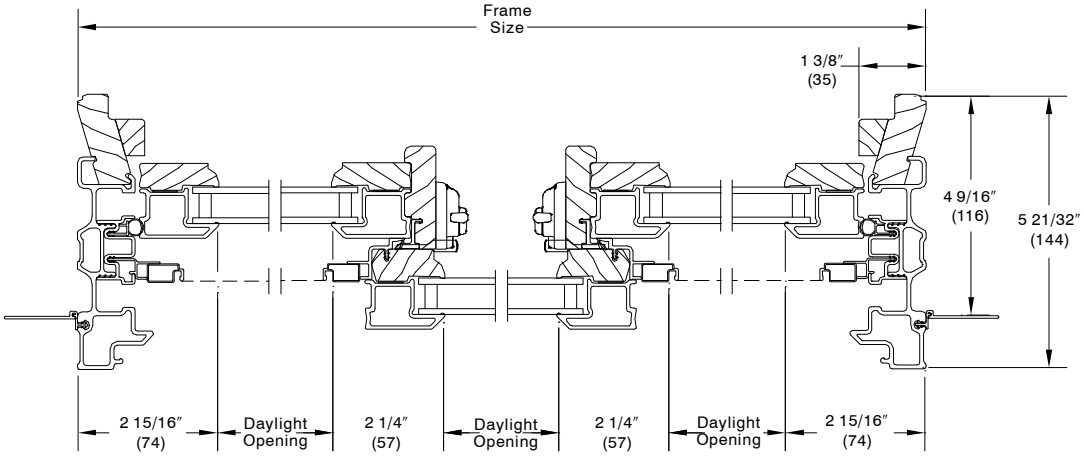

6 9/16” TRIPLE SASH XOX JAMB DETAIL

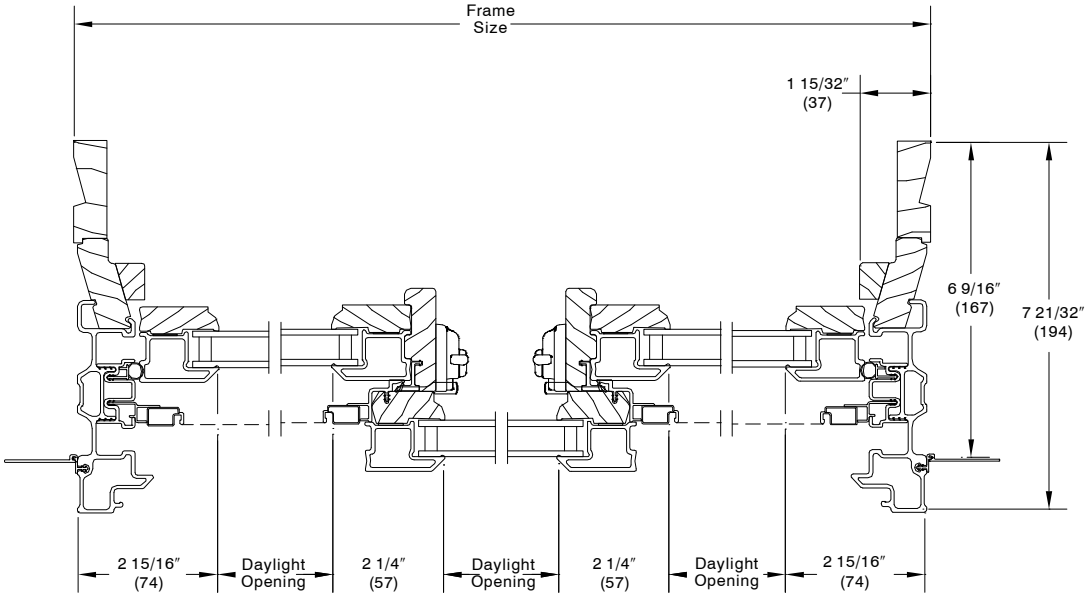

MULLIONS

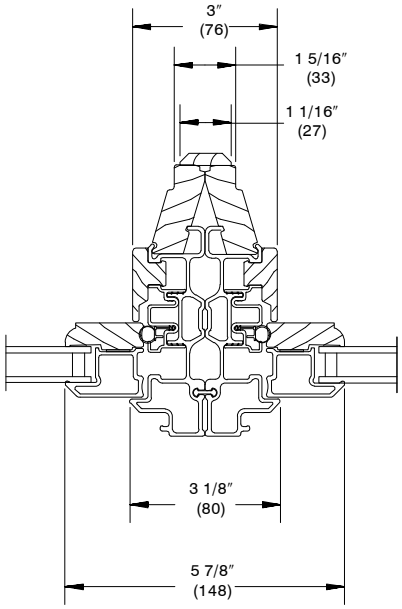

VERTICAL GLIDER UNITS
2 WIDE XO–OX

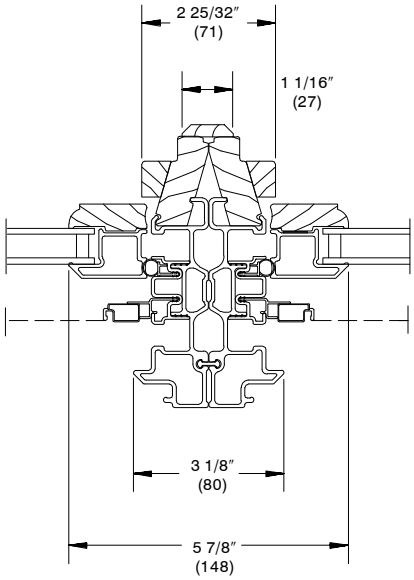

VERTICAL GLIDER UNITS
2 WIDE OX–XO

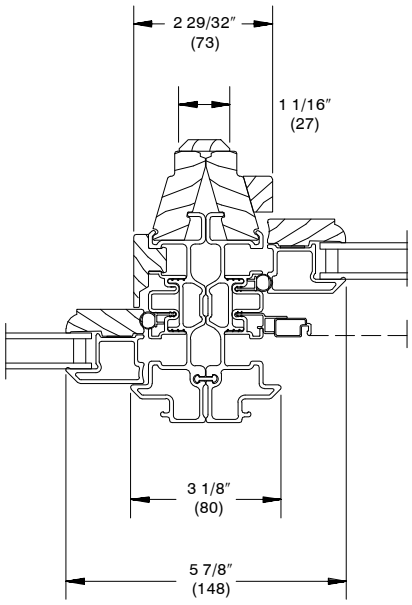

VERTICAL GLIDER UNITS
2 WIDE XO–XO

WOOD–ULTREX GLIDER

DIVIDED LITE OPTIONS NOT TO SCALE

DIVIDED LITE OPTIONS

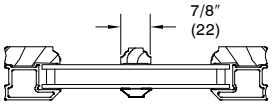

SIMULATED DIVIDED LITE

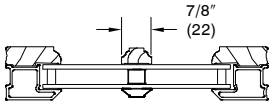

SIMULATED DIVIDED LITE WITH SPACER BAR

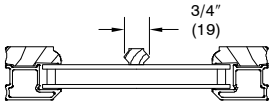

WOOD REMOVABLE GRILLE

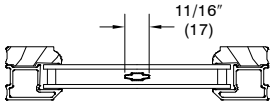

ALUMINUM GRILLE BETWEEN GLASS

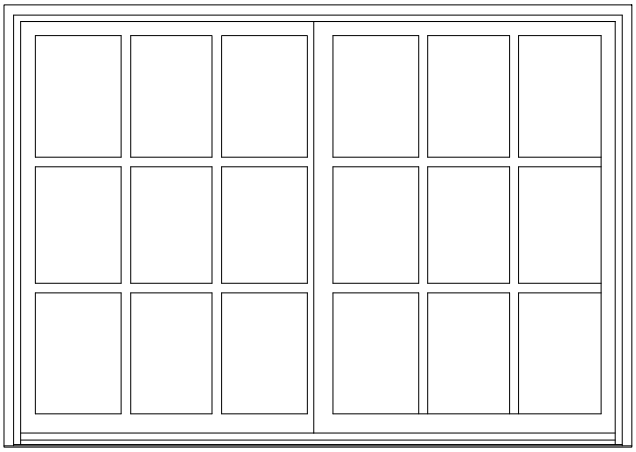

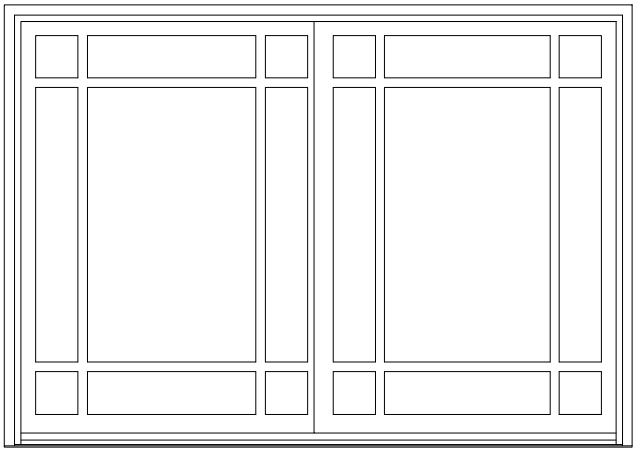

GBG or SDL (SDL SHOWN)*

* Optional 9 lite Prairie cut per sash for GBG or SDL.

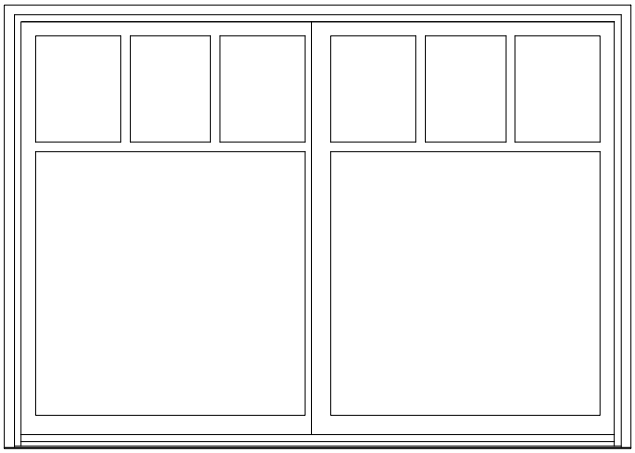

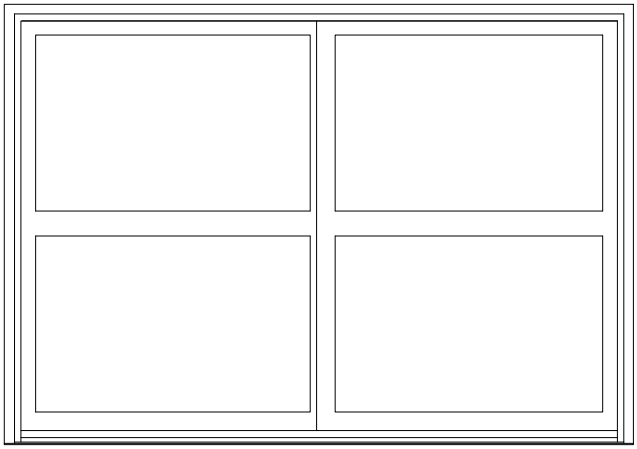

* Cottage lite cuts are **not** available on 24 height. Cottage cuts only available with SDL.

Conversion Formula:

$$\frac{\text{Total DLO} - \text{Total bar width}}{\text{Number of lites}} = \text{Individual DLO}$$

DIVIDED LITE OPTIONS

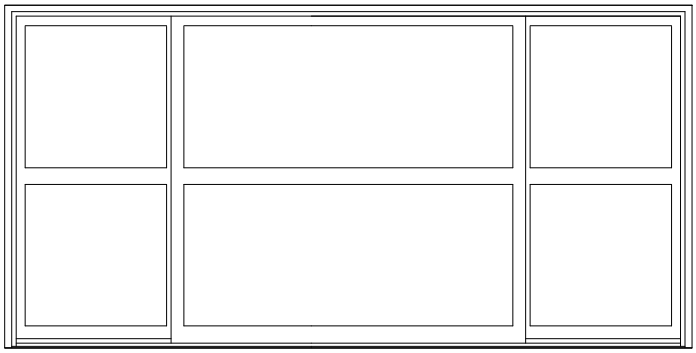

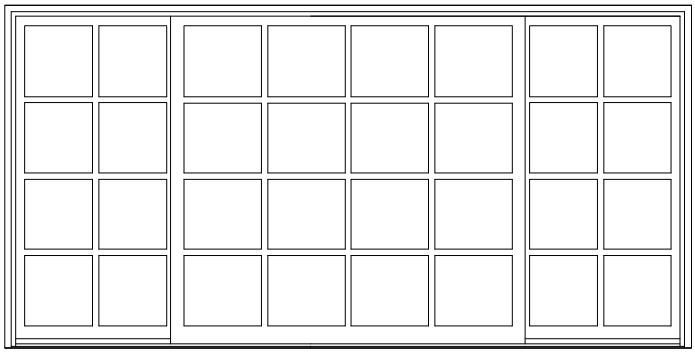

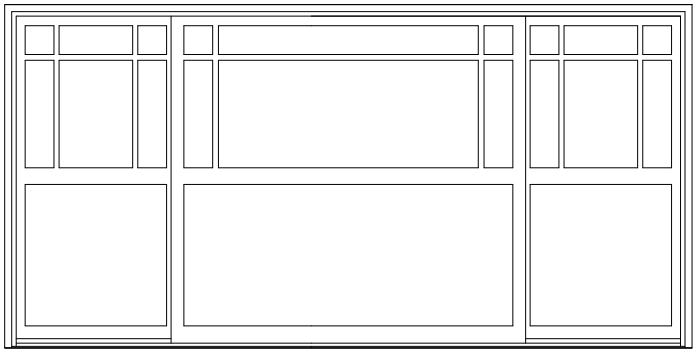

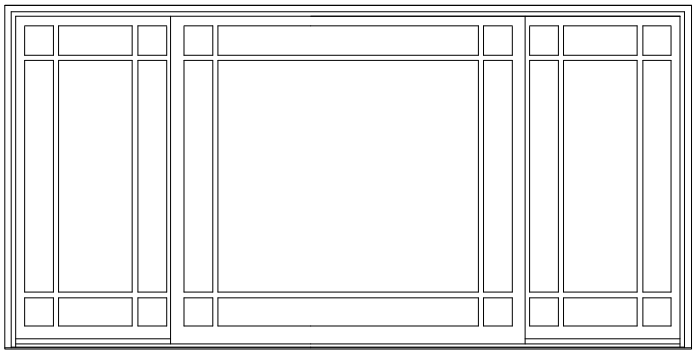

Conversion Formula:

$$\frac{\text{Total DLO} - \text{Total bar width}}{\text{Number of lites}} = \text{Individual DLO}$$

WOOD–ULTREX GLIDER

AVAILABLE DIVIDED LITE PATTERNS

CN	Rectangular			Prairie	
	Wood Grille	GBG or SDL		GBG	SDL
GLIDER per sash					
3624*	2W2H	2W2H		9–Lite	9–Lite
3636*	2W3H	2W3H	2W2H	9–Lite	9–Lite
3642*	2W3H	2W3H	2W2H	9–Lite	9–Lite
3648*	2W3H	2W3H	2W2H	9–Lite	9–Lite
3660*	2W4H	2W4H	2W2H	9–Lite	9–Lite
8424**	2W2H	2W2H		9–Lite	9–Lite
8436**	2W3H	2W3H	2W2H	9–Lite	9–Lite
8442**	2W3H	2W3H	2W2H	9–Lite	9–Lite
8448**	2W3H	2W3H	2W2H	9–Lite	9–Lite
8460**	2W4H	2W4H	2W2H	9–Lite	9–Lite
4824***	2W2H	2W2H		9–Lite	9–Lite
4836***	2W3H	2W3H	2W2H	9–Lite	9–Lite
4842***	2W3H	2W3H	2W2H	9–Lite	9–Lite
4848***	2W3H	2W3H	2W2H	9–Lite	9–Lite
4860***	2W4H	2W4H	2W2H	9–Lite	9–Lite
6024	3W2H	3W2H	2W2H	9–Lite	9–Lite
6036	3W3H	3W3H	2W2H	9–Lite	9–Lite
6342	3W3H	3W3H	2W2H	9–Lite	9–Lite
6048	3W3H	3W3H	2W2H	9–Lite	9–Lite
6060	3W4H	3W4H	2W2H	9–Lite	9–Lite
7224	3W2H	3W2H	2W2H	9–Lite	9–Lite
7236	3W3H	3W3H	2W2H	9–Lite	9–Lite
7242	3W3H	3W3H	2W2H	9–Lite	9–Lite
7248	3W3H	3W3H	2W2H	9–Lite	9–Lite
7260	3W4H	3W4H	2W2H	9–Lite	9–Lite
TRIPLE SASH–CENTER SASH					
7224	4W2H	4W2H	4W2H	9–Lite	9–Lite
7236	4W3H	4W3H	4W3H	9–Lite	9–Lite
7242	4W3H	4W3H	4W3H	9–Lite	9–Lite
7248	4W3H	4W3H	4W3H	9–Lite	9–Lite
7260	4W4H	4W4H	4W4H	9–Lite	9–Lite
8424	4W2H	4W2H	4W2H	9–Lite	9–Lite
8436	4W3H	4W3H	4W3H	9–Lite	9–Lite
8442	4W3H	4W3H	4W3H	9–Lite	9–Lite
8448	4W3H	4W3H	4W3H	9–Lite	9–Lite
8460	4W4H	4W4H	4W4H	9–Lite	9–Lite
9624	4W2H	4W2H	4W2H	9–Lite	9–Lite
9636	4W3H	4W3H	4W3H	9–Lite	9–Lite
9642	4W3H	4W3H	4W3H	9–Lite	9–Lite
9648	4W3H	4W3H	4W4H	9–Lite	9–Lite
9660	4W4H	4W4H	4W4H	9–Lite	9–Lite

* CN72 Triple Sash Flanker
**CN84 Triple Sash Flanker
***CN96 Triple Sash Flanker

WOOD–ULTREX GLIDER

AVAILABLE DIVIDED LITE PATTERNS

Cottage Lite Cuts			
CN Width	**Product**	**Lite Cut Wide**	**Total Lites per Unit**
36	Glider	2	6
48	Glider	2	6
60	Glider	3	8
72	Glider	3	8
ITGLTS			
CN Width	**Product**	**Lite Cut Wide**	**Total Lites per Unit**
72	Glider	2/4/2	11
84	Glider	2/4/2	11
96	Glider	2/4/2	11

WOOD–ULTREX GLIDER

INSTALLATION SUGGESTION Scale 3″ = 1′ 0″

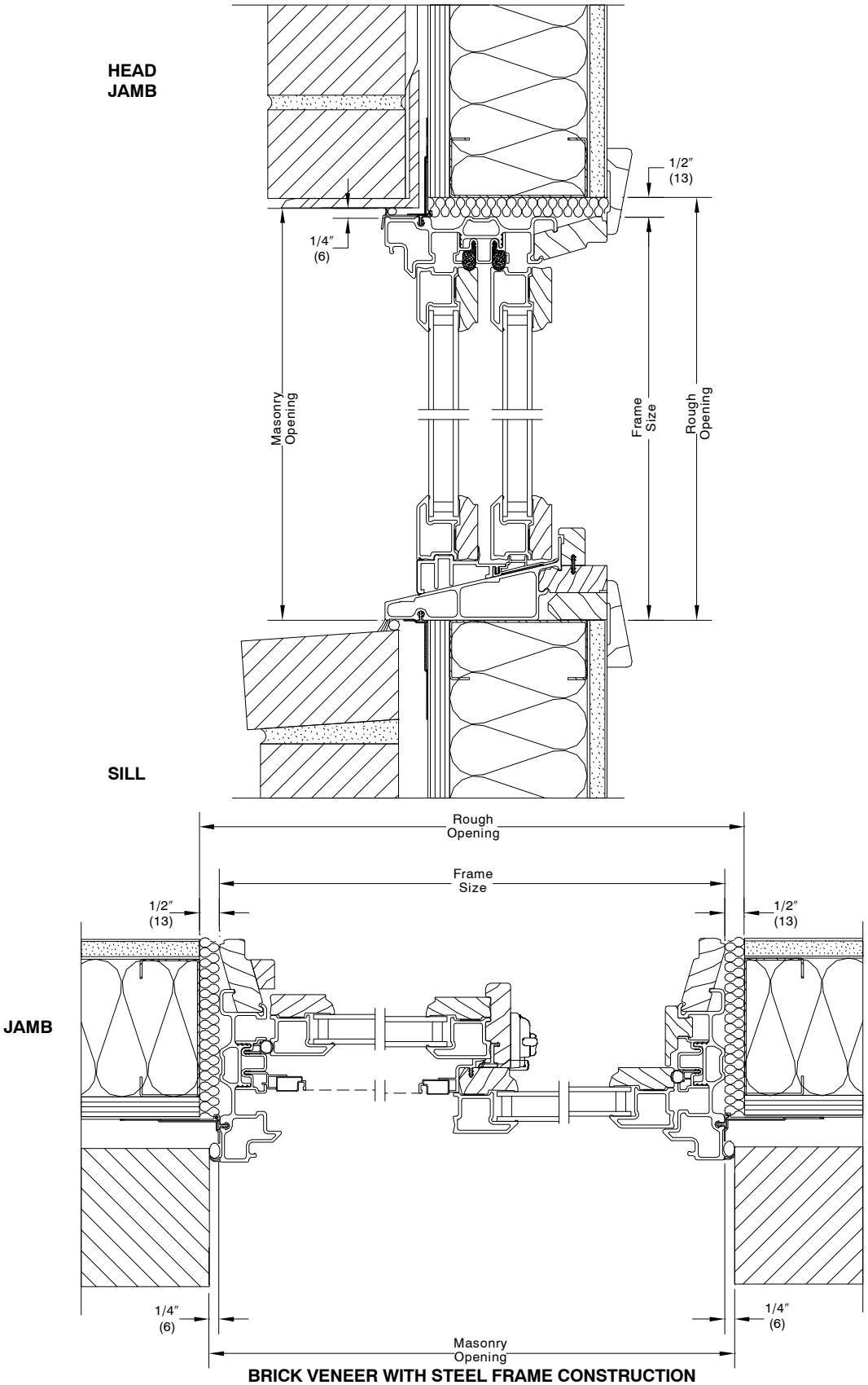

BRICK VENEER WITH STEEL FRAME CONSTRUCTION

NOTE: The above wall sections represent typical wall conditions, these details are not intended as installation instructions. Please refer to the installation instructions provided with the purchased units.

WOOD–ULTREX GLIDER

INSTALLATION SUGGESTION Scale 3″ = 1′ 0″

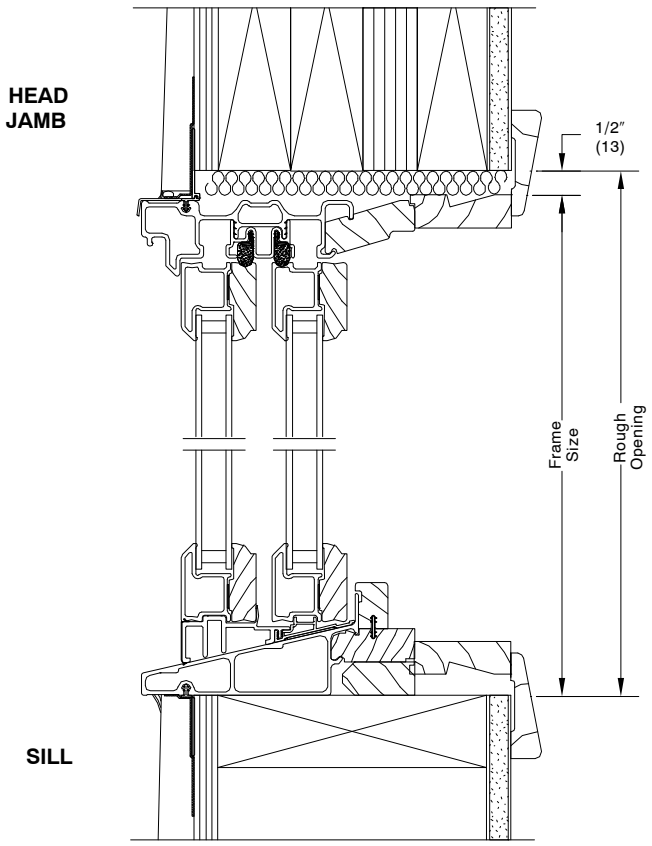

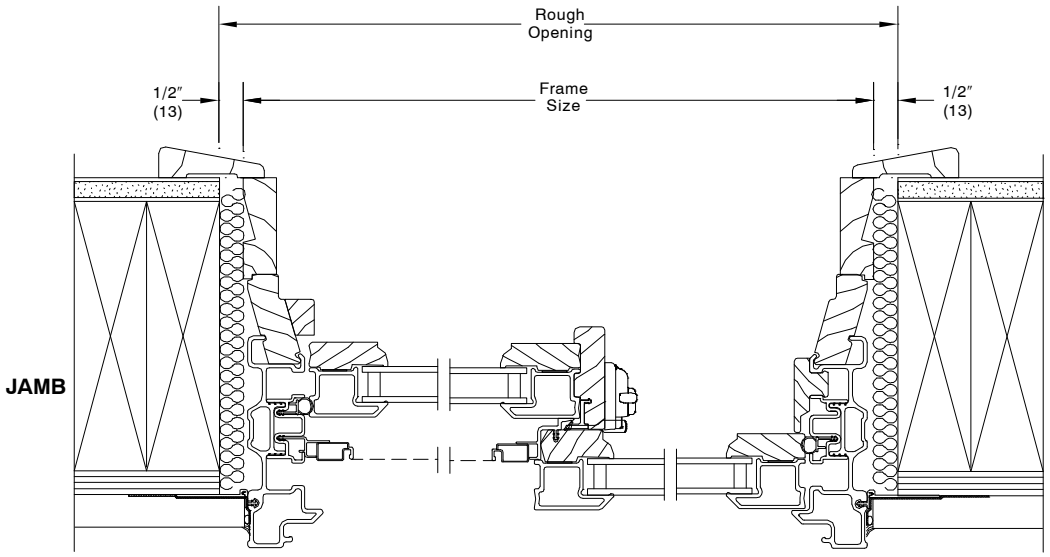

WOOD SIDING WITH 2X6 FRAME CONSTRUCTION

NOTE: The above wall sections represent typical wall conditions, these details are not intended as installation instructions. Please refer to the installation instructions provided with the purchased units.

NOTE: Glider Unit shown with jamb extension

WOOD–ULTREX GLIDER

INSTALLATION SUGGESTIONS Scale 3″ = 1′ 0″

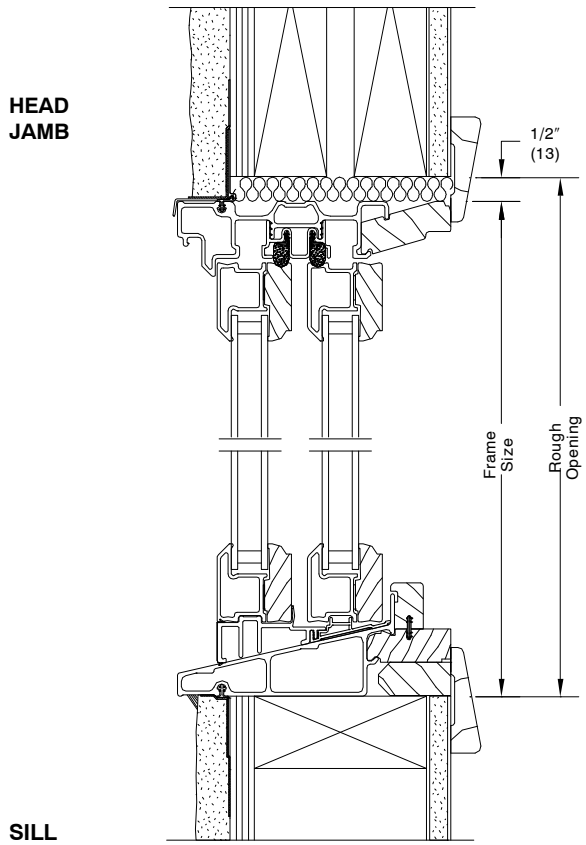

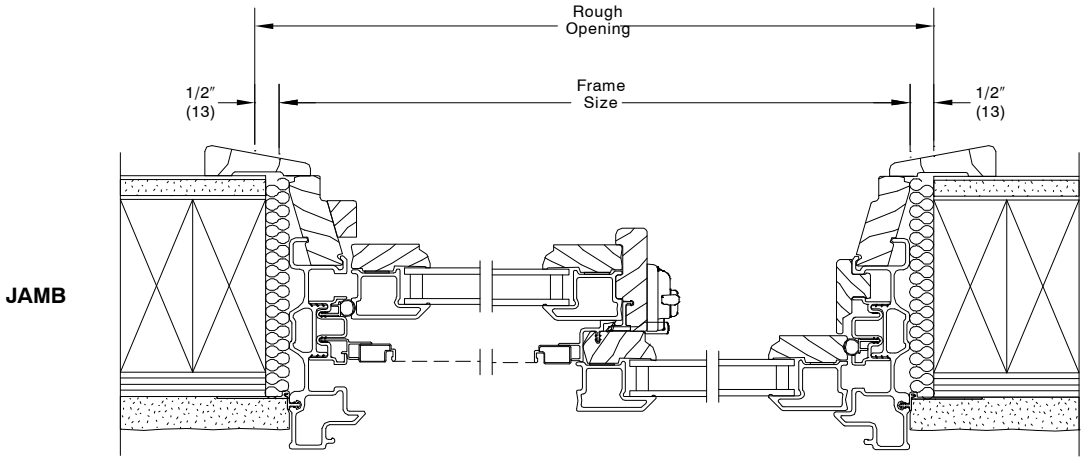

STUCCO WITH 2X4 FRAME CONSTRUCTION

NOTE: The above wall sections represent typical wall conditions, these details are not intended as installation instructions. Please refer to the installation instructions provided with the purchased units.