CHAPTER 7

INTEGRITY WOOD–ULTREX POLYGON

Unit Features 7.2
Standard Size Direct Glaze Rectangular Transom 7.4
Size Guidelines – Standard 7.5
Measurement Conversions – Standard 7.6
Size Guidelines / Measurement Conversions – Impact 7.7
Section Details – Stand Alone Casement/Awning 7.8
Section Details – Stand Alone Standard Glazing Double Hung, Glider and Doors 7.9
Section Details – Stand Alone Casement/Awning – Impact 7.10
Section Details – Stand Alone Casement/Awning – Tri–pane 7.11
Section Details – Stand Alone Double Hung, Glider and Doors – Impact 7.12
Horizontal Mull Details 7.13
Divided Lite Options – Direct Glaze Rectangle 7.14
Measurement Information 7.16
Installation Suggestions 7.18

ATTENTION:

- Specifications and technical data are subject to change without notice.
- Allow 1/16″ (1.59 mm) tolerance on all measurements.
- For answers to technical questions about Integrity products you may call our Integrity Support Line: 1–800–587–2712.
- Website: www.integritywindows.com

UNIT FEATURES

FRAME:

The frame exterior is made of Ultrex®, an advanced fiber reinforced material that is exceptionally resistant to thermal conductance. Ultrex patented coating system meets all the requirements of AAMA 623-10. Exterior coating shall meet AAMA 623–10 and 00022716 in stone white, pebble gray, bronze, evergreen, cashmere, and ebony. The interior is clear pine, kiln dried to a moisture content of 8–12% at time of fabrication. Water-repellent, preservative treated in accordance with WDMA I.S.4. Composite frame thickness is 2 1/16″ (52 mm). Frame width is 4 9/16″ (116 mm). 4/4 clear pine interior stop is applied to all units. Interior wood is available as Pine bare wood or factory applied white interior finish. Ultrex frame is .080″ (2 mm) thick.

JAMB EXTENSION:

6 9/16″ (167 mm) and 6 13/16″ (173) jamb extension available factory applied or in lineal lengths for field application.

INSTALLATION:

Folding nailing fin. Optional installation brackets available for Polygons without nailing fin intended for masonry application. Installation clips are required on Impact units.

GLAZING:

Dual pane units are manufactured with a glass thickness varying from 11/16″ (17mm) to 1” (25mm) IG with LoĒ^2–272®, LoĒ^3–366®, and LoĒ–180™ coatings including argon gas fill. Tri–pane units are manufactured with a glass thickness varying from 11/8 (29mm) to 1 1/2 (38 mm) IG with a combination coating consisting of LoĒ^2–272® on surface 2 and LoĒ–180™ on surface 5 including argon gas fill. Tempered glass and/or obscure glass are available as an option. All glass is of a select quality complying with ASTM C 1036. Insulating glass is manufactured and tested to pass level ASTM E 2190 and is IGCC certified. The glazing seal is a silicone bedding on both interior and exterior surfaces utilized in a sandwich style sash. STC/OITC values are available for 3.1/3.1 standard glass. Optional 3.1/4.7 glass is available. STC and OITC ratings are tested in accordance with ASTM E 90-09. See the Product Performance chapter for values.

RECTANGLES ONLY:

Interior/Exterior Simulated Divided Lites (SDL):

Interior bar: 7/8″ (22 mm) wide bars. Pine bare wood or factory applied white finish, to match interior. Exterior bar: Ultrex, 7/8″ (22 mm) wide bars, finish to match exterior. Pattern: Rectangular, Prairie or Cottage style cuts. Special size Direct Glaze Rectangle units will default to a 10″ (254 mm) daylight opening with a minimum 3″ (76 mm) daylight opening available. Due to size limitation, 6 or 9 lite Prairie cut may apply. Default is 9 lite for stand alone units. Simulated check rail option: 2 11/32” (60). Pattern available: simulated rail in standard center or center specified location with 7/8″ patterns above, below or both in pattern s of rectangular equal lite or prairie lite cuts. SDL with spacer bar available in standard rectangle only with standard lite patterns. For Tri–pane units, the spacer bar is located in the exterior space between surfaces 2 and 3.

Grilles–Between–the–Glass (GBG) Size Limitations May Apply:

Interior bar: 11/16″ (17 mm) contoured aluminum bar placed between two panes of glass. Pattern: rectangular or prairie cut. Due to size limitation, 6 or 9 lite Prairie cut may apply. Default is 9 lite for stand alone units. Exterior color determined by frame color. White interior. For Tri–pane units, the spacer bar is located in the exterior space between surfaces 2 and 3. GBGs are not available on Impact glazed units.

Exterior Casing:

Non–integral to the unit. Fastened to the exterior wall with barb and kerf 2” brick mould as a full surround or with sill nosing. 3 ½” flat casing available as full surround or with sill nosing. Also available with 1” ranch style sill and header overhang. Available on rectangle units only.

IMPACT GLAZING:

Optional Impact Zone 3 available on selected sizes. Zone 3 for winds up to 140 miles per hour. Glass is laminated insulated LoĒ^2 272® or LoĒ^3 366® with Argon, consisting of annealed or tempered glass exterior and laminated glass interior. The laminated glass is comprised of two pieces of glass with either a SGP or PVB laminate layer between. Interior and exterior glazing compound is silicone, in a sandwich style glazing system.

This page intentionally left blank.
NFRC Values are now located on www.integritywindows.com.

STANDARD SIZE DIRECT GLAZE RECTANGULAR TRANSOM

STANDARD SIZE DIRECT GLAZE RECTANGULAR TRANSOM			
Call #	**Unit Type**	**Frame Size OSM Width**	**Frame Size OSM Height**
ICADG7316	Casement/Awning	72″ (1829)	15 3/4″ (400)
ISPDDG7216	Sliding Patio Door	71″ (1803)	15 3/4″ (400)
ISFDDG10716	Sliding Patio Door	106 1/2″ (2705)	15 3/4″ (400)
IIFDDG3616	Inswing French Door	36 5/16″ (923)	15 3/4″ (400)
IIFDDG7216	Inswing French Door	71″ (1803)	15 3/4″ (400)
IIFDDG10816	Inswing French Door	107 5/16″ (2726)	15 3/4″ (400)
IOFDDG3616	Outswing French Door	36 5/16″ (923)	15 3/4″ (400)
IOFDDG7216	Outswing French Door	71″ (1803)	15 3/4″ (400)
IOFDDG10816	Outswing French Door	107 5/16″ (2726)	15 3/4″ (400)
ISFDDG7216	Sliding French Door	71″ (1803)	15 3/4″ (400)
ISFDDG10716	Sliding French Door	106 1/2″ (2705)	15 3/4″ (400)

SIZING GUIDELINES – **STANDARD**

Multiple assemblies can be factory mulled:
up to 1 unit wide by 2 units high

DIRECT GLAZE UNIT FOR ICA/IAWN:
up to 7 units wide by 1 unit high
MAXIMUM ROUGH OPENING not to exceed 113″ X 71 5/8″
up to 4 units wide by 5 units high
MAXIMUM ROUGH OPENING not to exceed 85″ X 94 3/4″

DIRECT GLAZE UNIT FOR ITDH:
up to 5 units wide by 1 unit high
MAXIMUM ROUGH OPENING not to exceed 113 1/2″ X 76 1/4″
up to 3 units wide by 5 units high
MAXIMUM ROUGH OPENING not to exceed 84″ X 92″

DIRECT GLAZE UNIT FOR ITGL:
up to 3 units wide by 1 unit high
MAXIMUM ROUGH OPENING not to exceed 113 1/2″ X 60 1/4″

DIRECT GLAZE UNIT FOR ISPD/ISFD:
up to 1 unit wide by 2 units high
MAXIMUM ROUGH OPENING not to exceed 72″ X 100 1/2″

DIRECT GLAZE UNIT FOR IIFD:
up to 3 units wide by 1 unit high
MAXIMUM ROUGH OPENING not to exceed 109 15/16″ X 96″
up to 2 units wide by 2 units high
MAXIMUM ROUGH OPENING not to exceed 73 5/8″ X 100 1/2″

NOTE: FIELD MULLING WINDOW ASSEMBLIES BEYOND THE ABOVE LIMITATIONS IS NOT RECOMMENDED.

FIELD MULLING DOOR ASSEMBLIES BEYOND 110″ X 112″ IS NOT RECOMMENDED.

MAXIMUM UNIT R.O.: 110″ (2794mm) in width or 109 1/2″ (2769) height not to exceed 49 square feet frame size. Units with rough opening larger than 32.3 sq. ft. may require tempered glass.

MAXIMUM UNIT R.O. (Tri–pane): 103 13/16″ (2637mm) in width or 103 5/16″ (2624) height not to exceed 44.160 square feet frame size. Units with rough opening larger than 32.3 sq. ft. may require tempered glass.

MINIMUM UNIT R.O. SIZE: Width: 13 7/8″ (352 mm) Height: 13 3/8″ (340 mm).

MINIMUM SHORT LEG R.O.: 8″ for P4–5, P4–6, P5–1.

MINIMUM P8 R.O.: 19 1/8″ (486 mm) x 19 1/8″ (486 mm) – minimum F/S short leg 7 1/2″ (191 mm)

ANGLE PITCHES: Available pitches for the following shapes:

P3 = 3/12 to 36/12.
P4, P5 = Maximum Pitch 36/12.

ROUGH OPENING TABLE FOR DIRECT GLAZE RECTANGLE ASSEMBLIES

WIDTH:	Single unit Rough Opening width MINUS 1″ = Frame width. ADD **all** frame widths PLUS 1″ = Total Rough Opening width.
HEIGHT:	Single unit Rough Opening height MINUS 1/2″ = Frame height. ADD **all** frame heights PLUS 1/2″ = Total Rough Opening height.
NOTE:	Assemblies using DG Rectangle units with 6 9/16″ or 6 13/16″ jambs for ITDH/ITGL/DR, add 1/4″ to width and 1/8″ to height of Rough Opening.
NOTE:	Polygon shapes are unavailable factory mulled.

MEASUREMENT CONVERSIONS – **STANDARD**

MEASUREMENT CONVERSIONS – DIRECT GLAZE RECTANGLE UNITS ONLY				
POLYGON	**WIDTH**		**HEIGHT**	
Rough Opening to	**Imperial**	**Metric**	**Imperial**	**Metric**
Masonry Opening	– 1/2″	– 13 mm	– 1/4″	– 6 mm
OM of Frame	– 1″	– 25 mm	– 1/2″	– 13 mm
Interior Daylight Opening	– 5 3/8″	– 137 mm	– 4 7/8″	– 124 mm
OM of Glass	– 3 13/16″	– 97 mm	– 3 5/16″	– 84 mm

Factory Mulling

- Direct Glaze units limited to only transom mulling above various Impact product types
  - All ICA products (ICA / IAWN / ICAP / ICATR)
  - All ITDH products (ITDH / ITDHP / ITDHTR)
  - IOFD
  - ISFD
- Refer to lower assembly unit(s) for detailed RO assembly mull limits

DIRECT GLAZE TRANSOM AND POLYGON RECTANGLES – IMPACT Measurement Conversion				
Transom/Poygon Rough Opening to	Width*		Height*	
	Imperial (in.)	Metric (mm)	Imperial (in.)	Metric (mm)
Masonry	–0.500	–12.7	–0.250	–6.4
OSM of Frame	–1.000	–25.4	–0.500	–12.7
O.S. Daylight Opening	–5.125	–130.2	–4.625	–117.5
I.S. Daylight Opening	–5.375	–136.5	–4.875	–123.8
OSM of Glass	–4.002	–101.7	–3.502	–89.0

* Add .250″ to R.O. width and .125″ to R.O. height for all Double Hung and Door style Direct Glaze and Polygon units.

Minimum and Maximum Sizes – Polygon

Maximum R.O. width: 97″ (2464) Maximum R.O. height: 96 1/2″ (2451)
Maximum R.O.: 49 sq. ft. All shapes shall be defined by the enclosed rectangle.

Minimum unit F.S. dimensions: 12 7/8″ (327) x 12 7/8″ (327)
Minimum P8–1 R.O. size: 19 1/8″ (486) x 19 1/8″ (486)
Minimum frame short dimension for P4–5, P4–6, P5–1: 7 1/2″ (191)

Minimum Frame Angle: 14° (3/12 pitch)

STANDARD SIZE DIRECT GLAZE RECTANGULAR TRANSOM – IMPACT			
Call #	Unit Type	Frame Size OSM Witdh	Frame Size OSM Height
ICADG7316	Casement/Awning	72″ (1829)	15 3/4″ (400)
IOFDDG3616	Outswing French Door	36 5/16″ (923)	15 3/4″ (400)
IOFDDG7216	Outswing French Door	71″ (1803)	15 3/4″ (400)

SECTION DETAILS – **Standard Glazing**

DIRECT GLAZE CASEMENT/AWNING– POLYGON STAND ALONE – 4 9/16″ – Standard Glazing

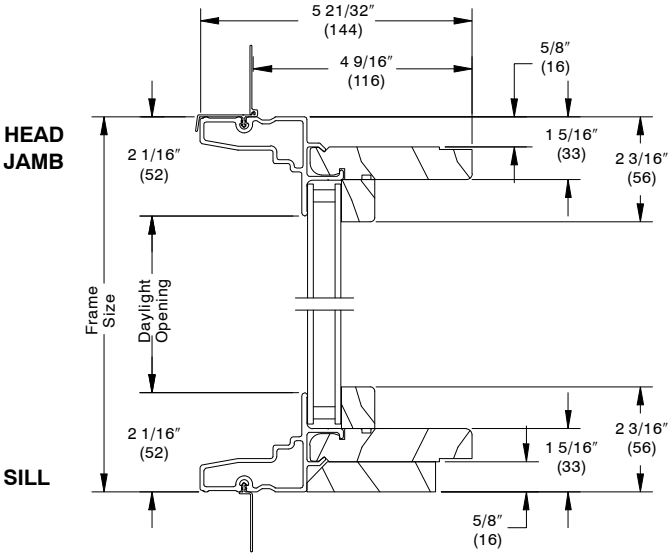

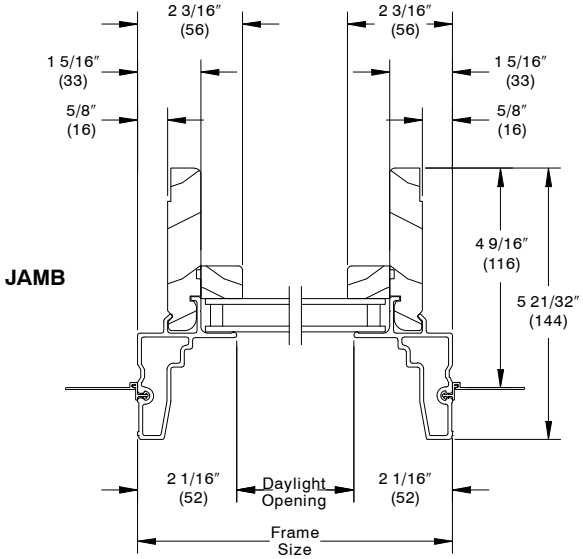

DIRECT GLAZE CASEMENT/AWNING – POLYGON STAND ALONE– 6 9/16″ – Standard Glazing

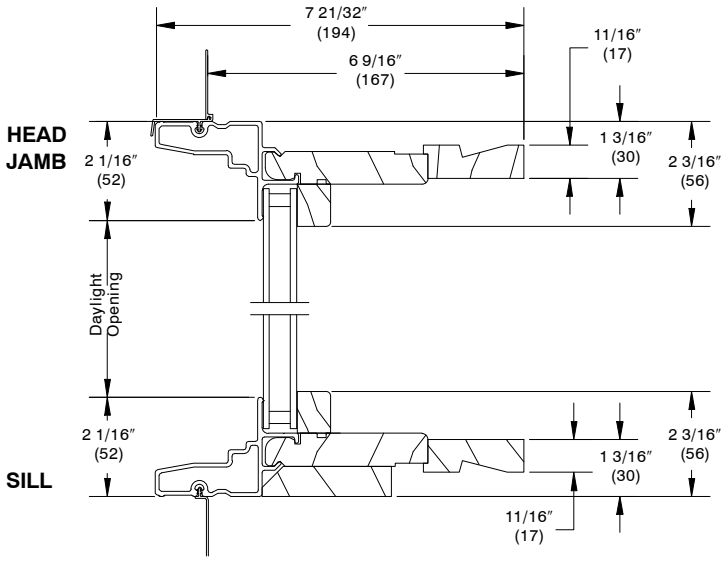

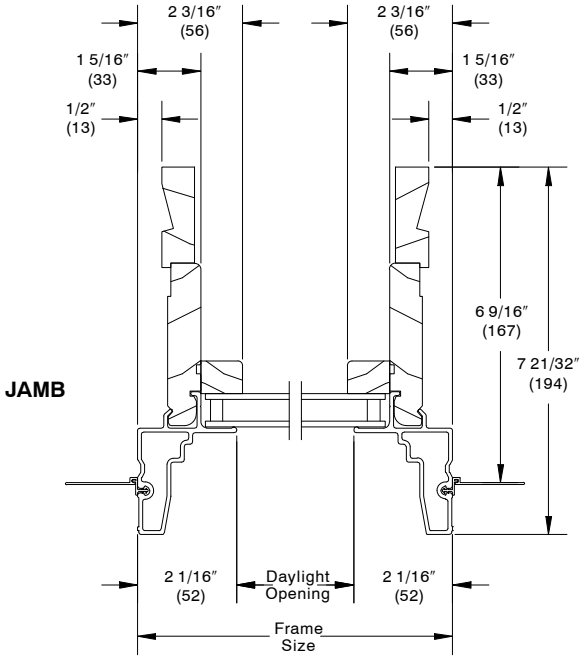

SECTION DETAILS – **Standard Glazing**

DIRECT GLAZE DOUBLE HUNG, GLIDER, DOORS
POLYGON STAND ALONE– 4 9/16" – Standard Glazing

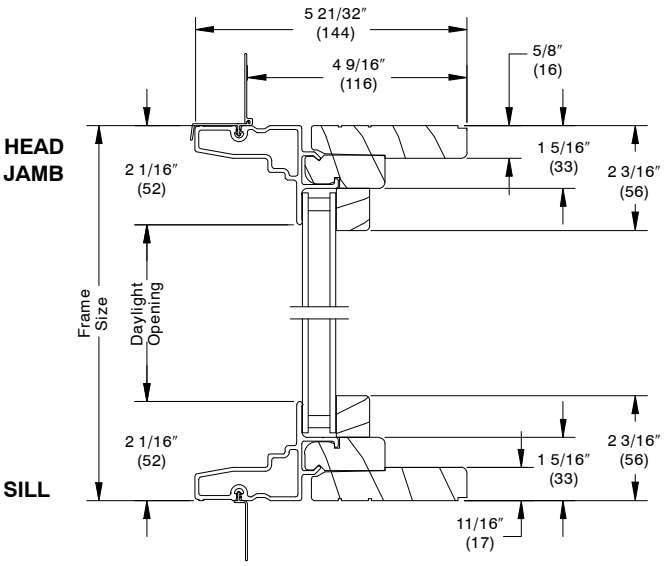

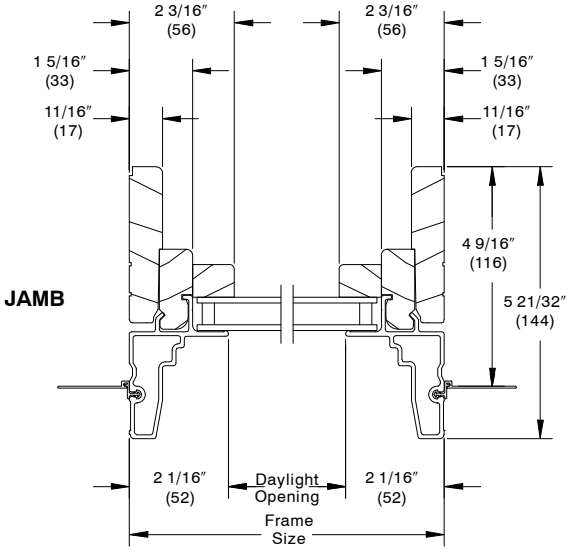

DIRECT GLAZE DOUBLE HUNG, GLIDER, DOORS
POLYGON STAND ALONE– 6 9/16" – Standard Glazing

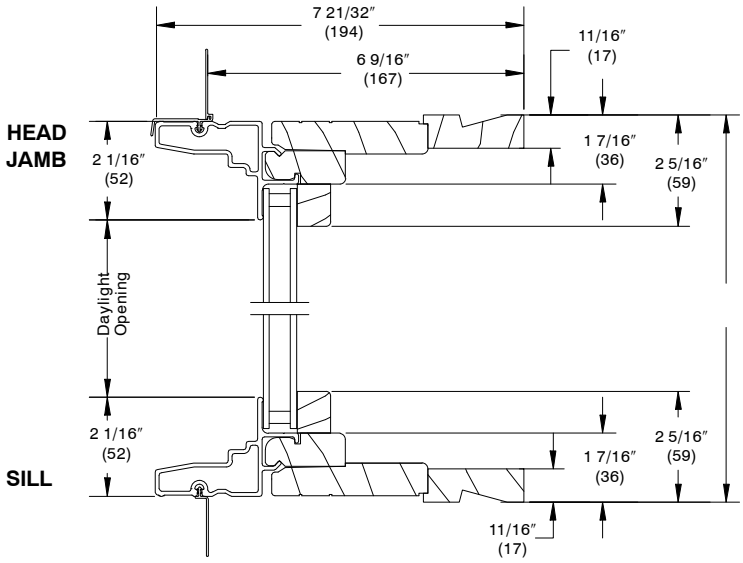

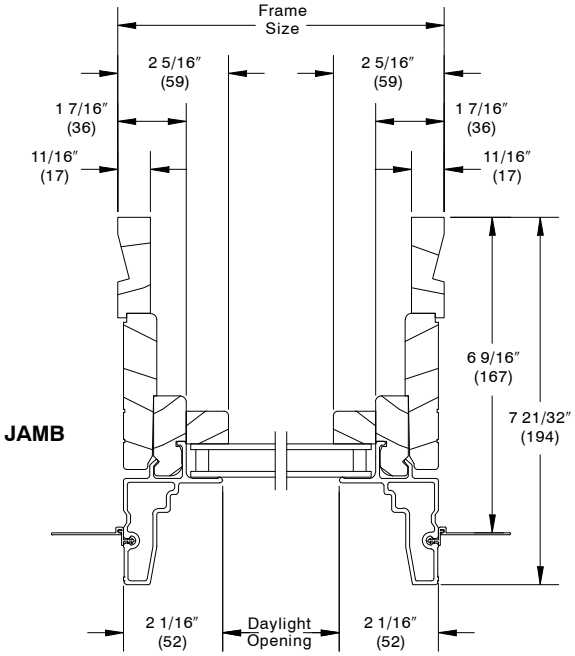

SECTION DETAILS – **Impact Glazing**

DIRECT GLAZE CASEMENT/AWNING– POLYGON STAND ALONE – 4 9/16” – Impact Glazing

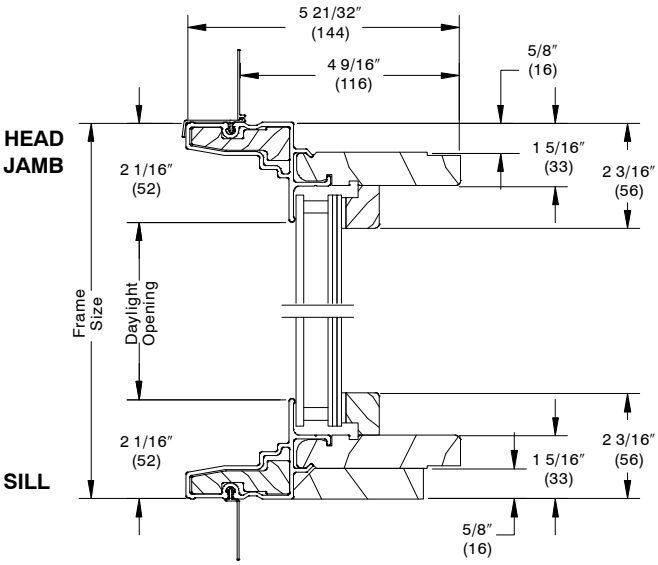

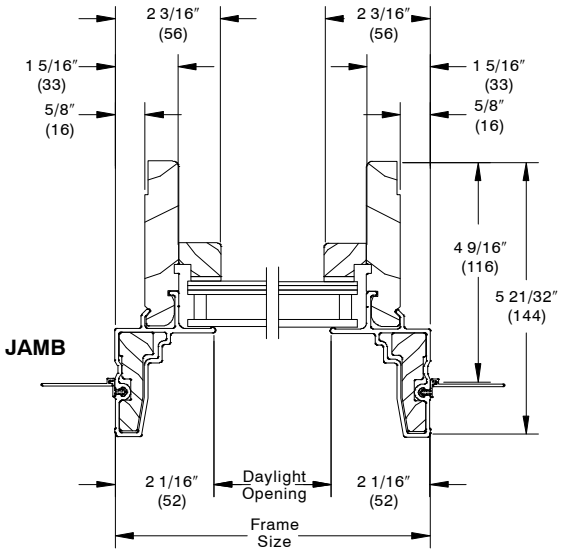

NOTE:

Logo represents units that are certified for Impact glazing with a wind zone 3

DIRECT GLAZE CASEMENT/AWNING – POLYGON STAND ALONE– 6 9/16” – Impact Glazing

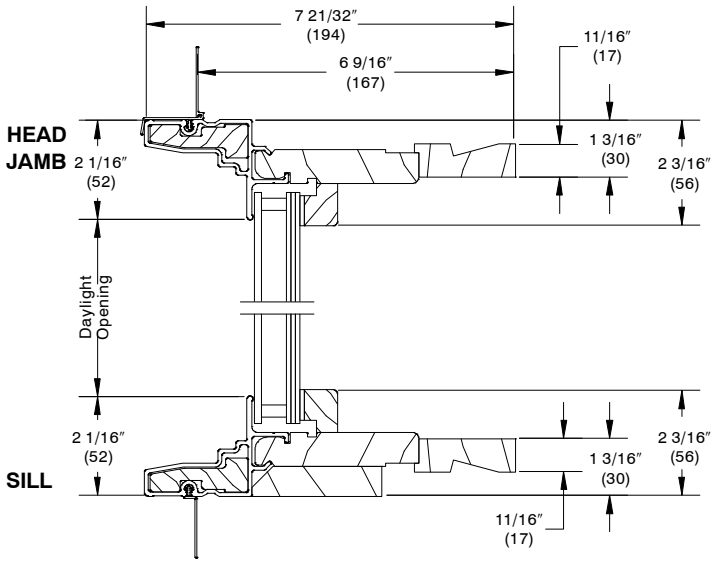

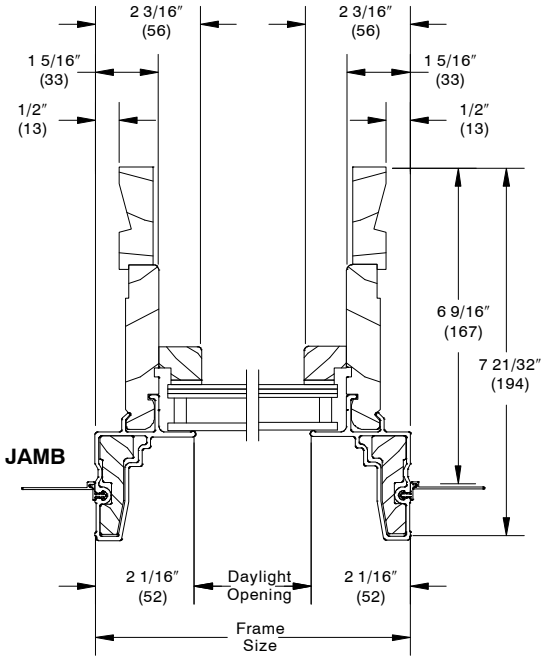

SECTION DETAILS – **Tri–pane Glazing**

DIRECT GLAZE CASEMENT/AWNING – POLYGON STAND ALONE– 4 9/16” – Tri–pane

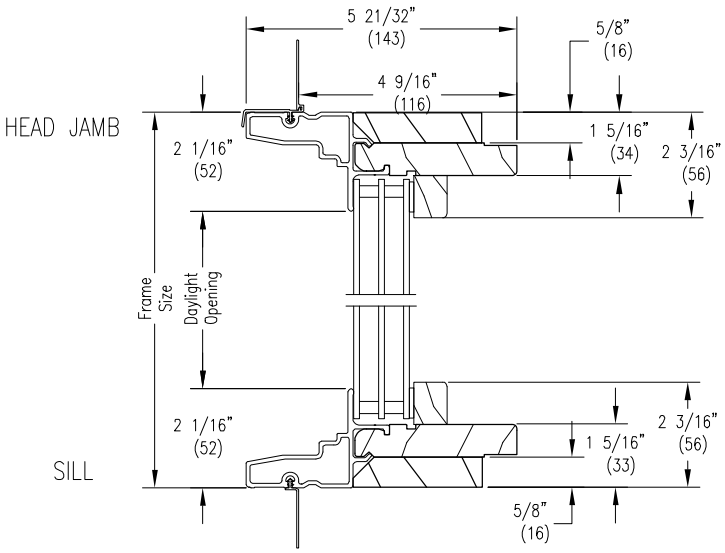

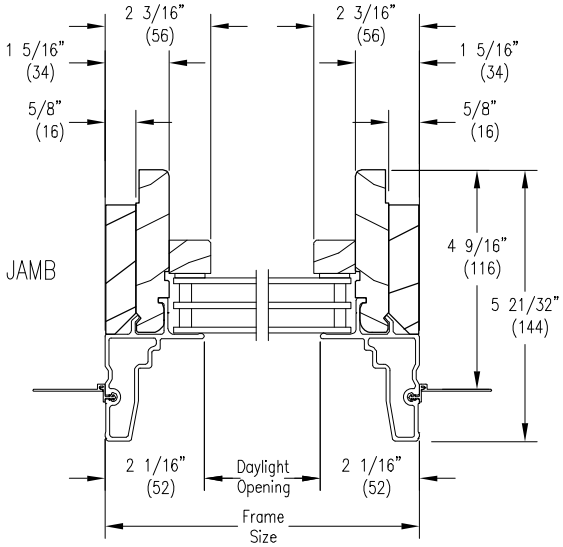

DIRECT GLAZE CASEMENT/AWNING – POLYGON STAND ALONE– 6 9/16” – Tri–pane

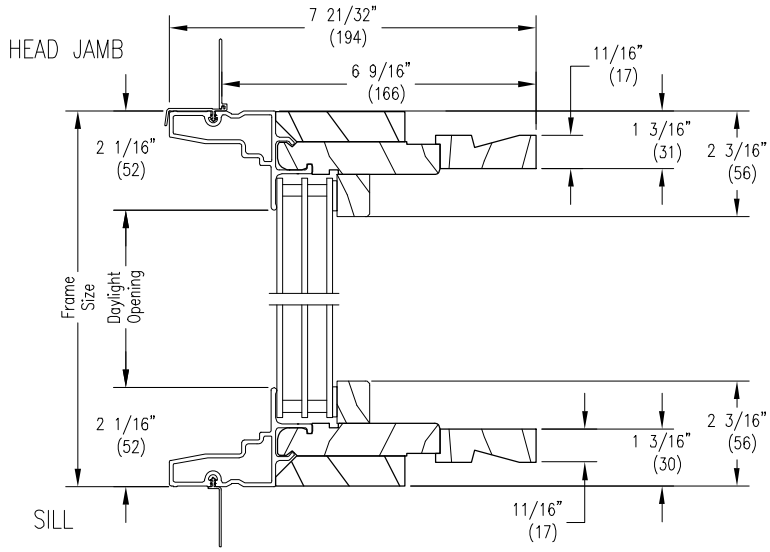

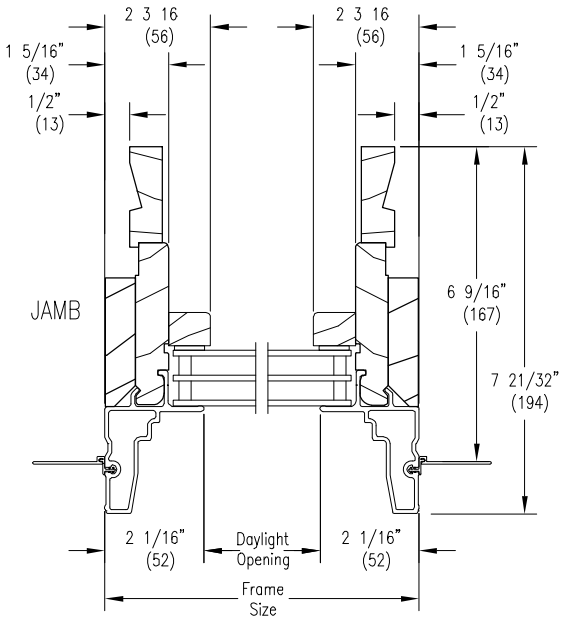

SECTION DETAILS – **Impact Glazing**

DIRECT GLAZE DOUBLE HUNG, GLIDER, DOORS
POLYGON STAND ALONE– 4 9/16” – Impact Glazing

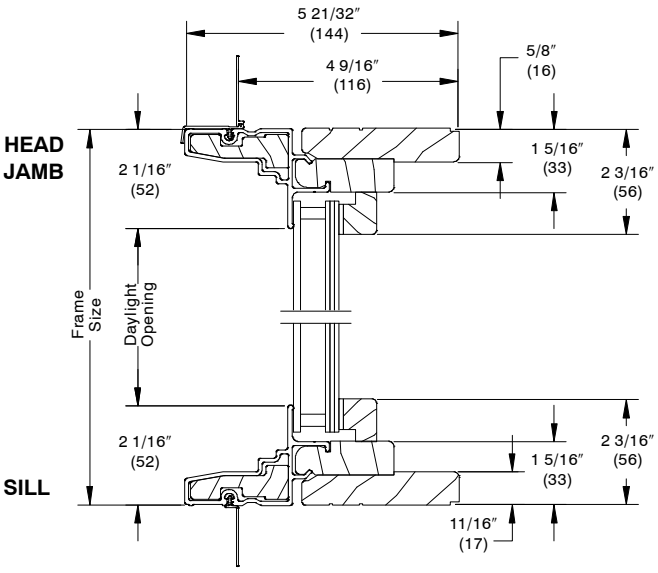

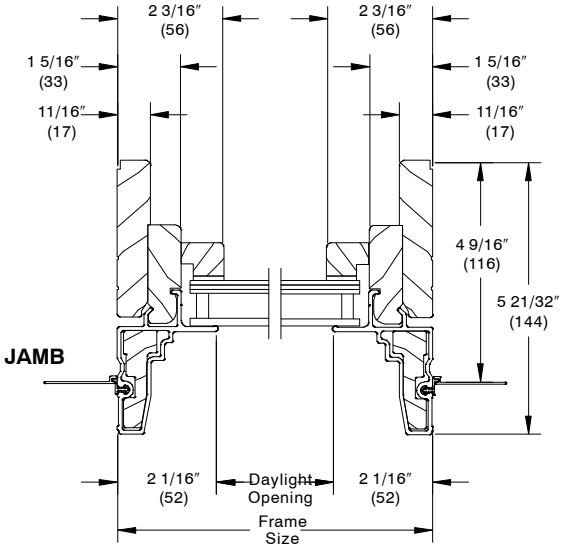

NOTE:

Logo represents units that are certified for Impact glazing with a wind zone 3

DIRECT GLAZE DOUBLE HUNG, GLIDER, DOORS
POLYGON STAND ALONE– 6 9/16” – Impact Glazing

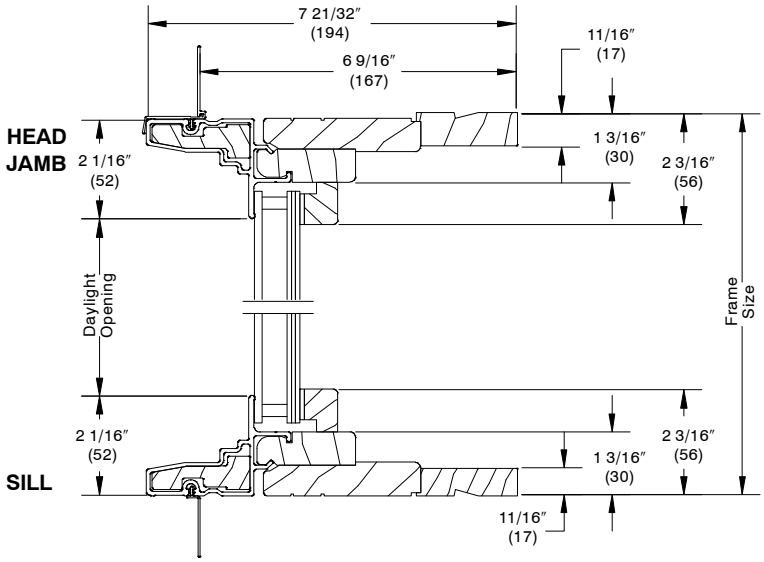

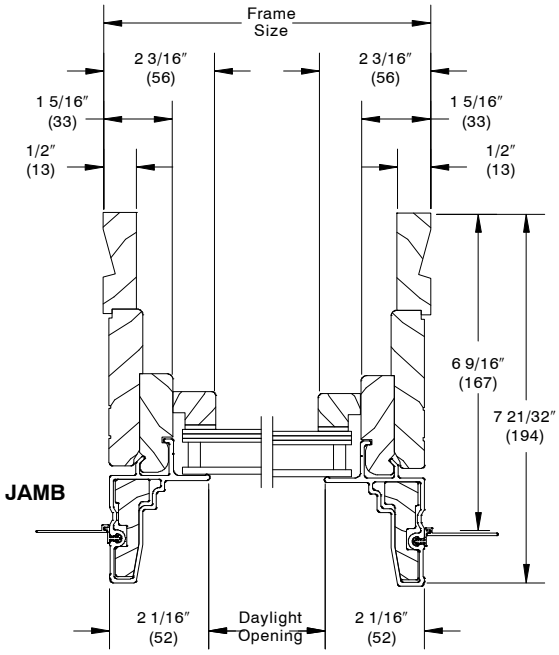

SECTION DETAILS – HORIZONTAL MULLION DETAILS

MULLIONS

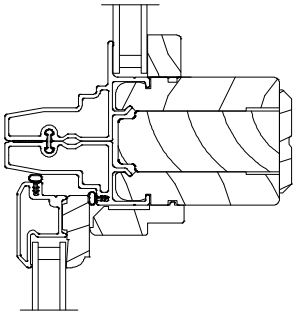

DIRECT GLAZE POLYGON/TRANSOM OVER CASEMENT/AWNING W/STRUCTURAL MULL REINFORCEMENT BLOCK

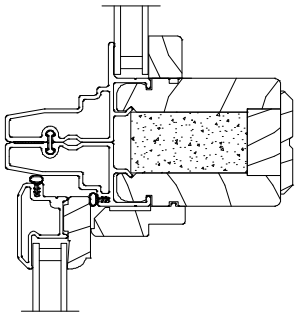

DIRECT GLAZE POLYGON/TRANSOM OVER CASEMENT AWNING

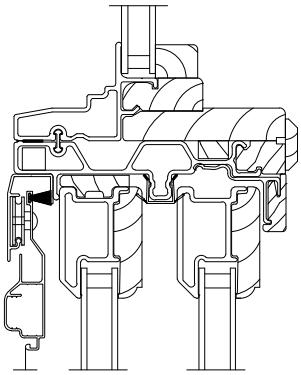

DIRECT GLAZE POLYGON/TRANSOM OVER SLIDING PATIO DOOR

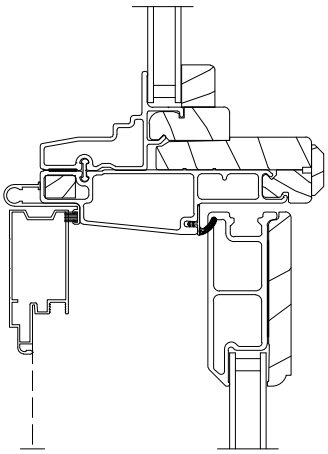

DIRECT GLAZE POLYGON/TRANSOM OVER INSWING FRENCH DOOR

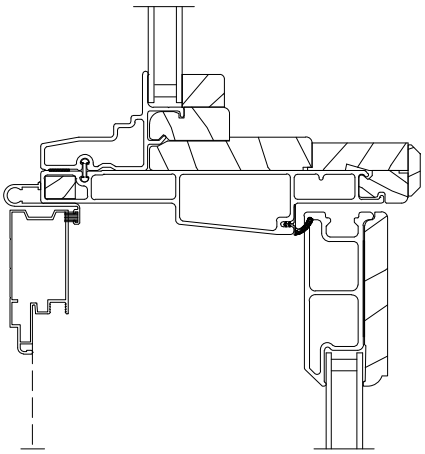

DIRECT GLAZE POLYGON/TRANSOM OVER 6 9/16” INSWING FRENCH DOOR

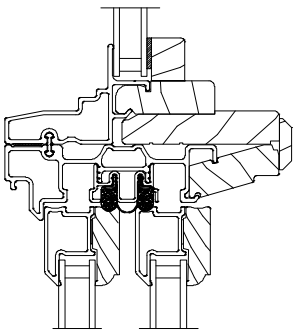

DIRECT GLAZE POLYGON/TRANSOM OVER ITGL GLIDER

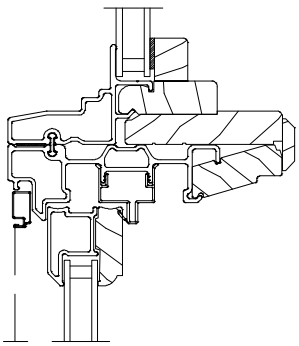

DIRECT GLAZE POLYGON/TRANSOM OVER DOUBLE HUNG

DIVIDED LITE OPTIONS – DIRECT GLAZE RECTANGLE

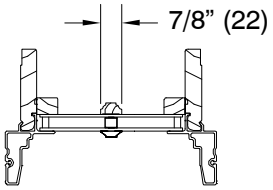

Simulated Divided Lite w/Spacer Bar

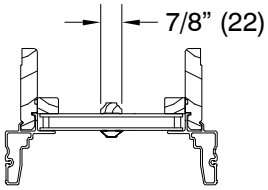

Simulated Divided Lite

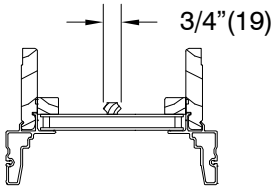

Wood Removable Grille

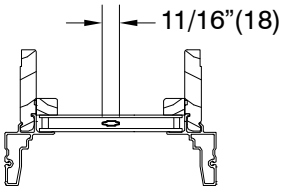

Aluminum Grille Between Glass

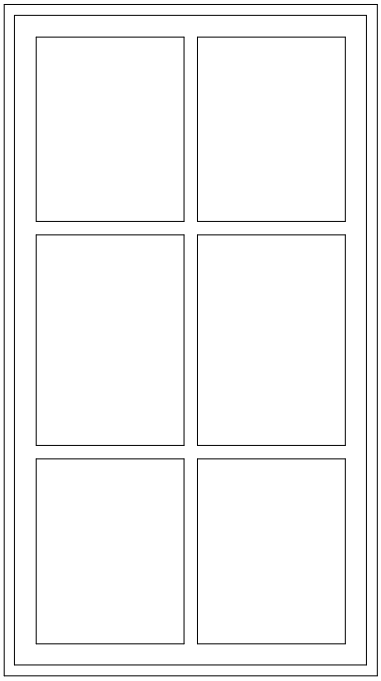

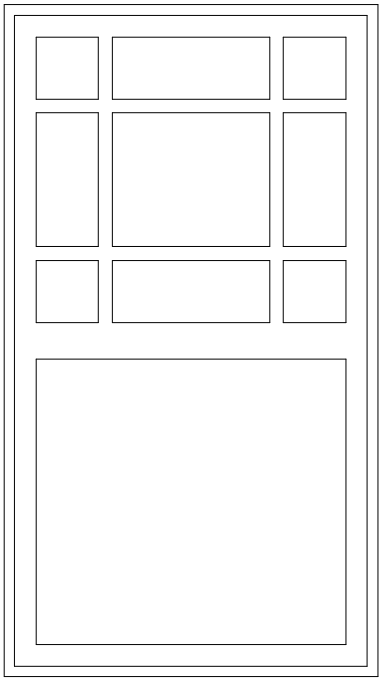

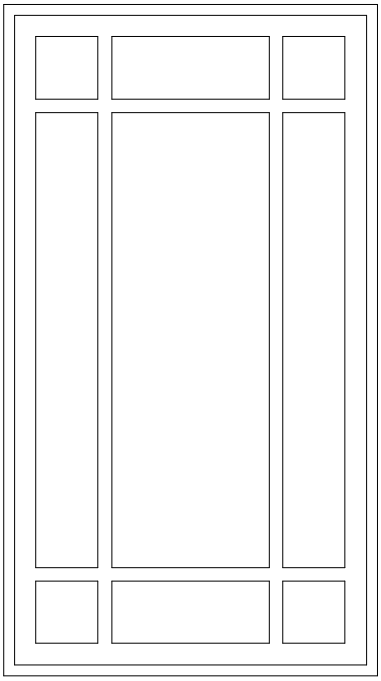

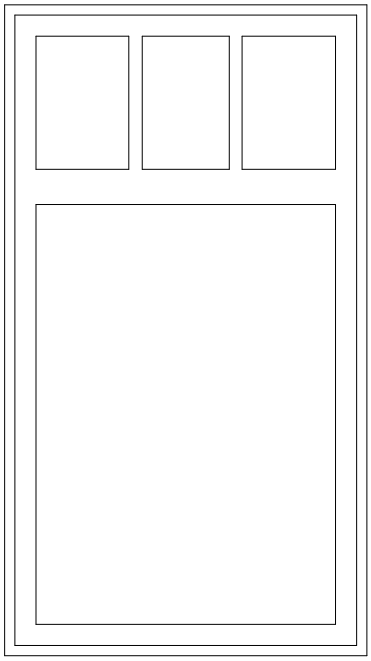

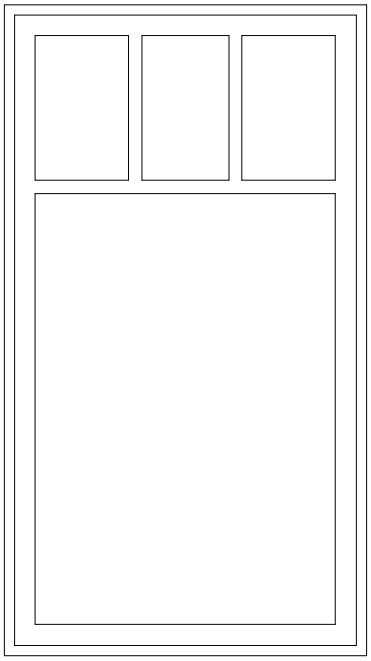

NOTE: **Only rectangle shape polygons are available with SDL or GBG.**

DIVIDED LITE OPTIONS – DIRECT GLAZE RECTANGLE

Prairie Lite Cuts					
Lite Cut	Minimum DLO	Maximum		Minimum	
		RO Width	RO Height	RO Width	RO Height
SDL with optional spacer bar					
9–Lite	4″	110″	109 1/2″	>24 1/2″	> 24″
6–Lite Top	4″	110″	24″	16 1/2″	16″
6–Lite Top LH or RH	4″	24 1/2″	109 1/2″	16 1/2″	16″
GBG					
9–Lite	4″	85 3/4″	85 1/4″	>24 1/2″	> 24″
6–Lite Top	4″	85 3/4″	24″	16 1/2″	16″
6–Lite Top LH or RH	4″	85 3/4″	85 1/4″	16 1/2″	16″

* Standard lite pattern is equal DLO rectangle.
* Special size direct glaze rectangles with prairie SDL or GBG will default to 4″ (102) daylight opening (DLO) corners may not align with standard unit prairie cuts unless specified at the time of order. Contact your Integrity representative for more information.
* Cottage Lite cut: Default is 10″ (254) daylight opening height. Minimum daylight opening height is 4″ (102)
* Special size direct glaze guidelines:

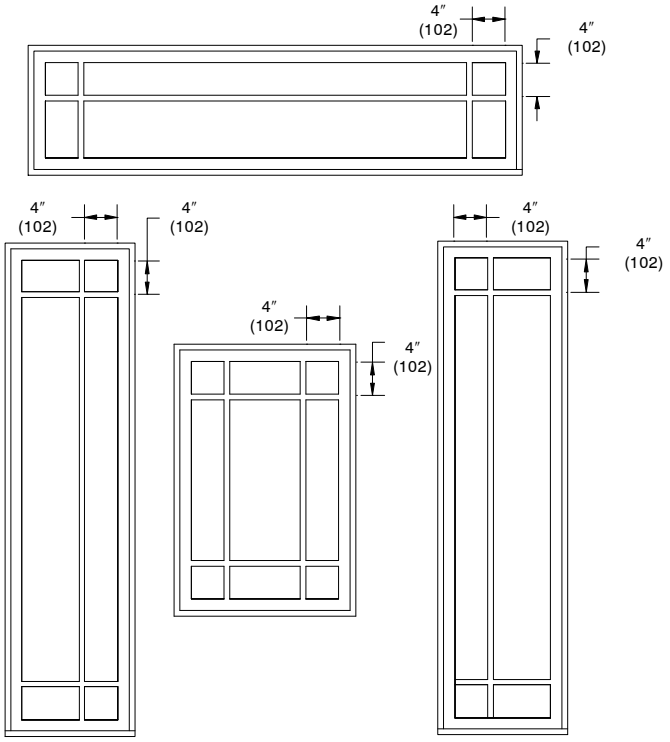

NOTE: GBGs are not available on Impact IZ3 units.

NOTE: SDL with spacer bars are not available on Impact IZ3 units.

NOTE: Only rectangle shape polygons are available with SDL or GBG.

NOTE: 4” DLO lite cut minimum for 7/8” pattern.

Conversion Formula:

$$\frac{\text{Total DLO} - \text{Total bar width}}{\text{Number of lites}} = \text{Individual DLO}$$

MEASUREMENT INFORMATION

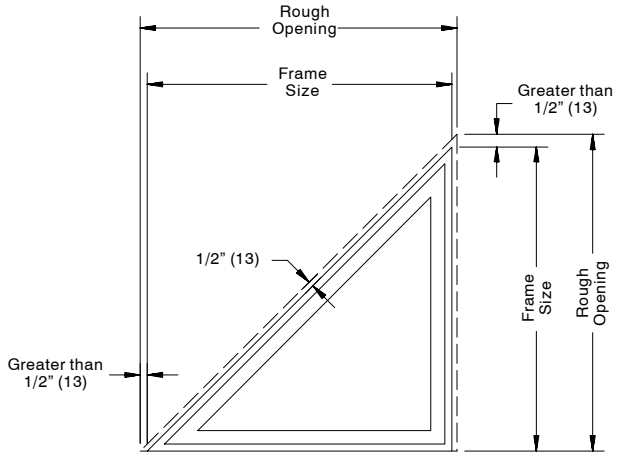

SPECIAL ANGULAR SHAPE UNIT

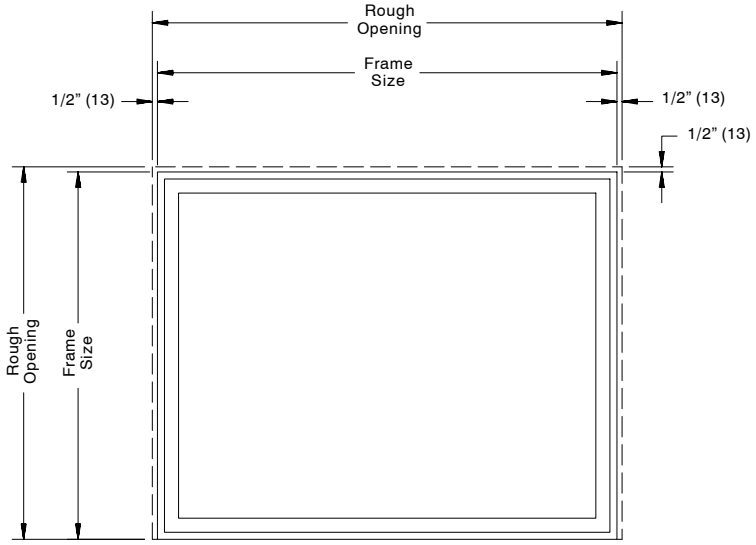

RECTANGULAR UNIT

Note:

On all units, we maintain our clearance or conversion dimension perpendicular to the frame. For this reason, standard rectangular conversions cannot be used for any unit involving angles. These must be calculated on an individual basis. If any dimension is critical (such as frame measurement to match lower unit) then order should be placed with that dimension. The order will be converted to the accurate rough opening. When calculating Angular shapes, contact your Integrity Representative.

Rough opening tolerance is 1/2″ (13) perpendicular to frame.
Masonry opening tolerance is 1/4″ (6) perpendicular to frame

POLYGON

MEASUREMENT INFORMATION

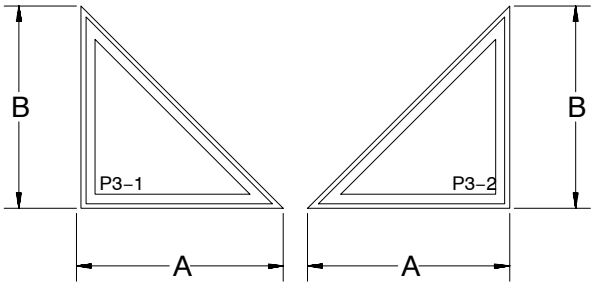

90° TRIANGLE

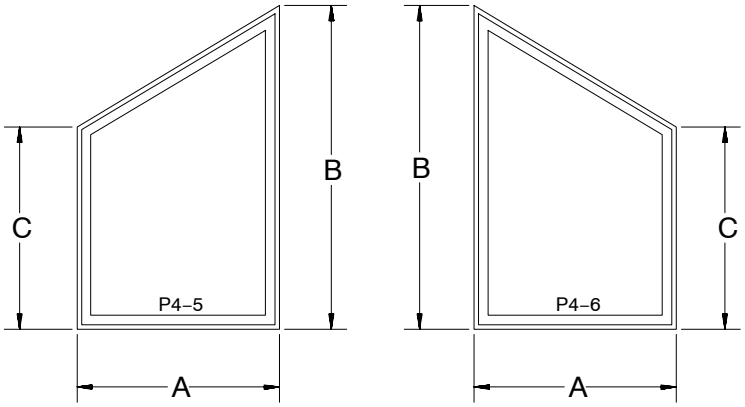

TRAPEZOID

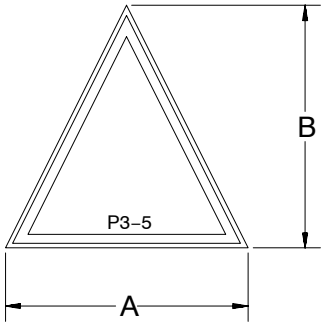

ISOSCELES TRIANGLE

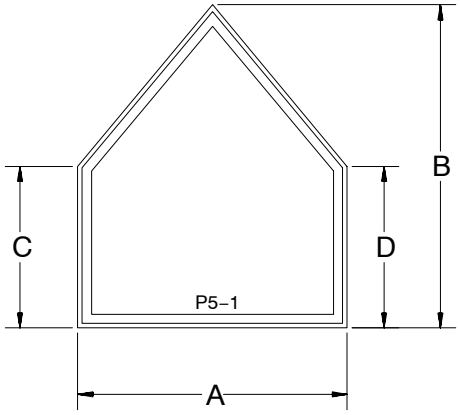

PENTAGON

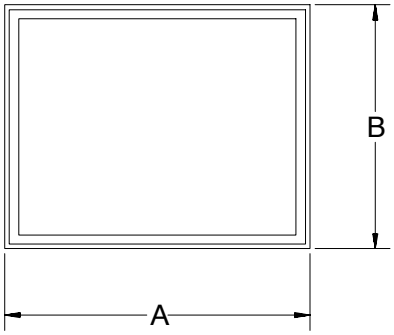

90° RECTANGLE

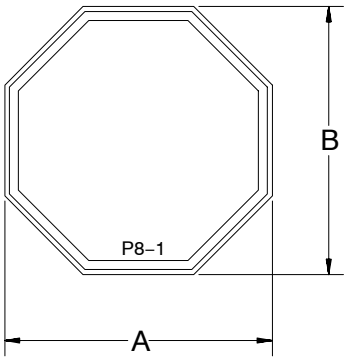

OCTAGON

How to Specify Dimensions:

When ordering a trapezoid, triangle, or rectangle window, provide a sketch of the unit as viewed from the exterior, also include key rough opening dimensions. Specify casement or other.

Example:

To order a window of a trapezoid opening, provide the measurements of A, B, and C as indicated. For other shapes, give the dimensions shown.

INSTALLATION SUGGESTION Scale 3″ = 1′ 0″

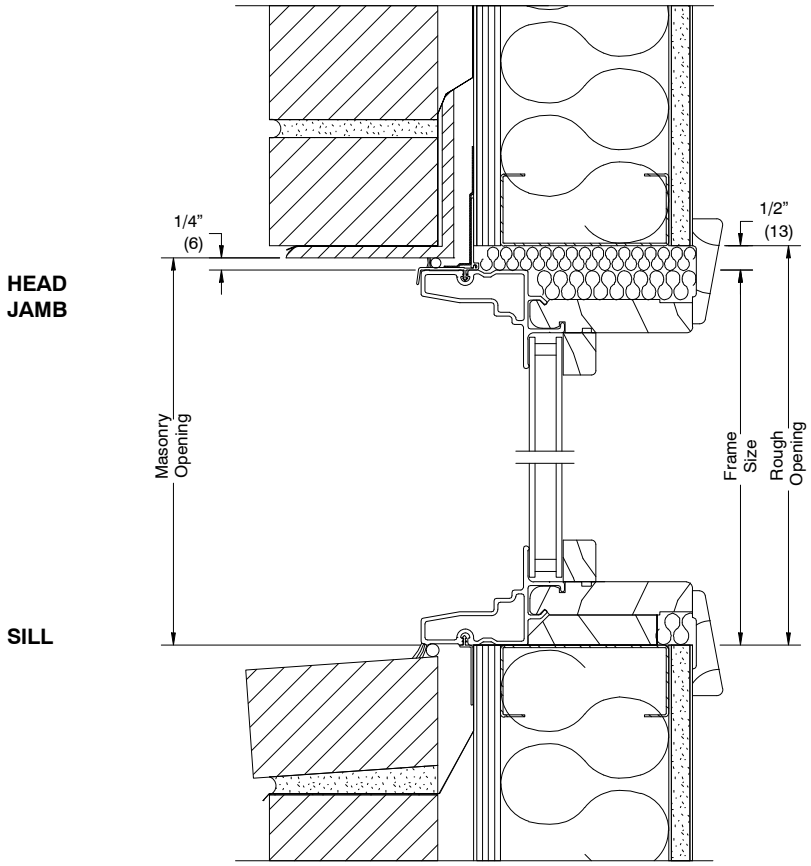

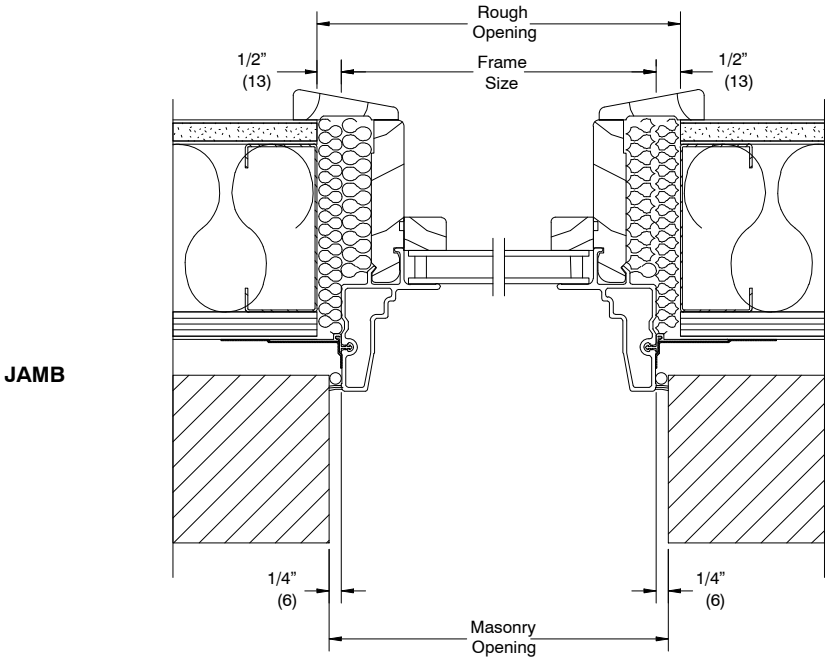

BRICK VENEER WITH STEEL FRAME CONSTRUCTION

NOTE:
The above wall sections represent typical wall conditions, these details are not intended as installation instructions. Please refer to the installation instructions provided with the purchased units.

INSTALLATION SUGGESTION Scale 3″ = 1′ 0″

HEAD
JAMB

SILL

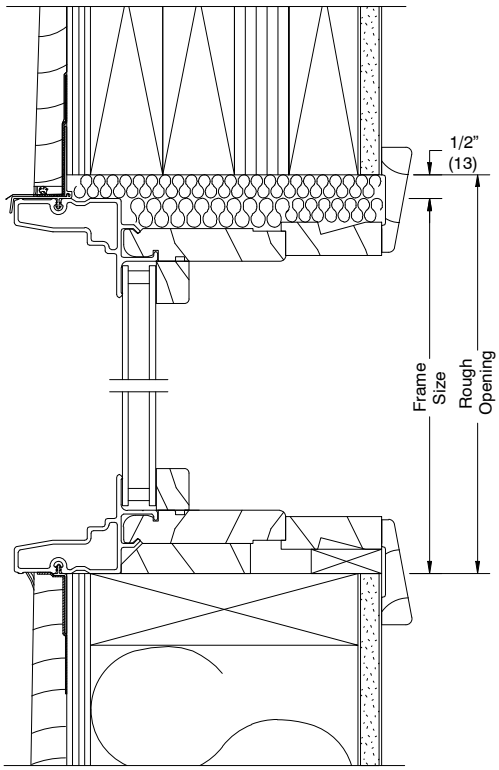

JAMB

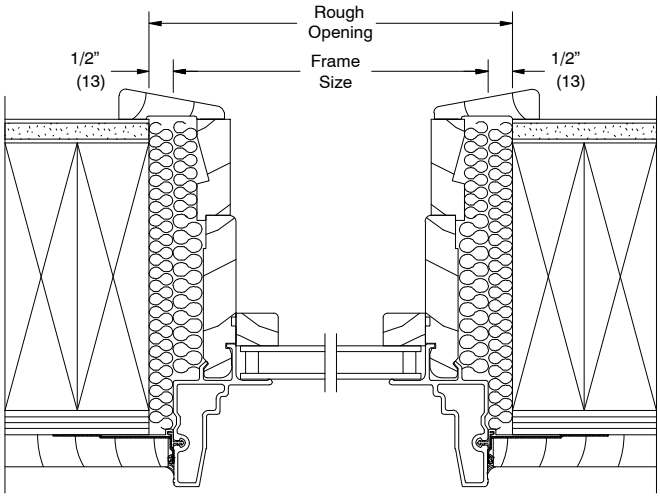

WOOD SIDING WITH 2X6 FRAME CONSTRUCTION

NOTE:
The above wall sections represent typical wall conditions, these details are not intended as installation instructions. Please refer to the installation instructions provided with the purchased units.

INSTALLATION SUGGESTION Scale 3″ = 1′ 0″

HEAD
JAMB

SILL

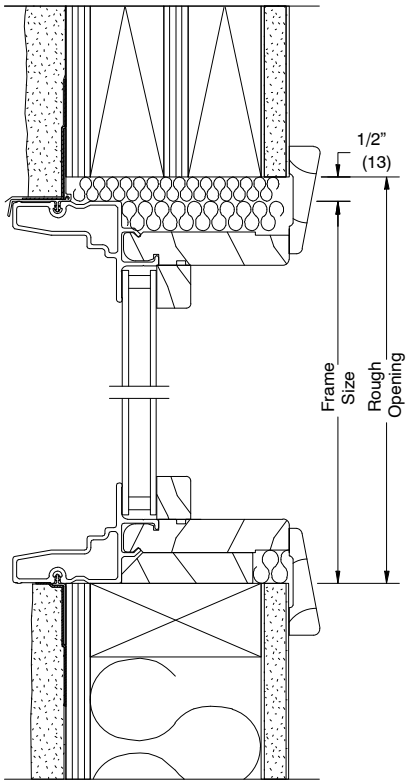

JAMB

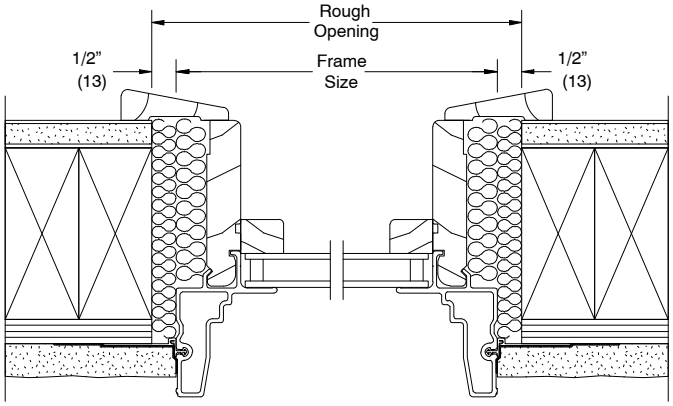

STUCCO WITH 2X4 FRAME CONSTRUCTION

NOTE:
The above wall sections represent typical wall conditions, these details are not intended as installation instructions. Please refer to the installation instructions provided with the purchased units.