CHAPTER 8

INTEGRITY WOOD–ULTREX SLIDING PATIO DOOR

Unit Features 8.2
NFRC Values 8.3
Egress, Lite, Vent Measurements 8.4
Sizing Guidelines 8.5
Elevations 8.6
Section Details 8.7
Section Details – 6 9/16″ Jamb 8.8
Section Details – Transoms and Mullions 8.9
Divided Lite Options 8.10
Available Divided Lite Patterns 8.11
Installation Suggestions 8.12

ATTENTION:

- Specifications and technical data are subject to change without notice.
- Allow 1/16″ (1.59 mm) tolerance on all measurements.
- Optional interior casing for round top units and interior mullion trim are shipped loose for field installation.
- For answers to technical questions about Integrity products you may call our Integrity Support Line: 1–800–587–2712.
- Website: www.integritywindows.com

SLIDING PATIO DOOR

UNIT FEATURES

FRAME:
The frame exterior is made of Ultrex®, an advanced fiber reinforced material that is exceptionally resistant to thermal conductance. Ultrex patented coating system meets all the requirements of AAMA 623-10. Exterior coating shall meet AAMA 623–10 and 00022716 in stone white, pebble gray, bronze, evergreen, cashmere, and ebony. The interior is clear pine, kiln dried to a moisture content of 8–12% at time of fabrication. Sill is Ultrex with oak interior sill liner. Water repellent, preservative treated in accordance with WDMA I.S.4. Composite frame thickness is 1 1/4″ (32 mm). Frame width of 4 9/16″ (116 mm). 4/4 clear pine interior stop is applied to all units. Interior wood is available as Pine bare wood or factory applied white interior finish. Ultrex is .080″ (2 mm) thick.

PANEL:
The panel exterior is made of Ultrex, an advanced fiber reinforced material that is exceptionally resistant to thermal conductance. The interior is clear pine, kiln dried to a moisture content of 8–12% at time of fabrication. Water repellent, preservative treated in accordance with WDMA I.S.4. Composite sash thickness of 1 3/4″ (44 mm). Ultrex is .080″ (2 mm) thick. Available in stone white, pebble gray, bronze, evergreen, cashmere, or ebony colors.

JAMB EXTENSION:
6 9/16″ (167 mm) and 6 13/16″ (173 mm) jamb extension available factory applied or in lineal lengths for field application. Assemblies with 6 9/16″ and 6 13/16″ jamb extensions – add 1/4″ to width and 1/8″ to height of Rough Opening.

HARDWARE:
Standard single point non–keyed handle/lock in Almond Frost comes with door. Optional White, Brass, Satin Nickel, and Oil rubbed Bronze. Almond Frost and White are powder coat. Other colors are lacquered. Keyed handle sets are available in all finished.

INSTALLATION:
Factory applied folding nailing fin and drip cap system. Optional installation brackets for masonry available. Factory supplied field mulling kits are available for standard assemblies.

GLAZING:
All units are manufactured with a 3/4″ (19mm) IG with LoĒ^2–272®, LoĒ^3–366® and LoĒ–180™ coatings including argon gas fill. Tempered obscure is available as an option. All glass is of a select quality complying with ASTM C 1036. Insulating glass is manufactured and tested to pass level ASTM E 2190 and is IGCC certified. The glazing seal is a silicone bedding on both interior and exterior surfaces utilized in a sandwich style sash. STC/OITC values are available for 3.1/3.1 standard glass. Optional 3.1/4.7 STC/OITC Upgrade glass is available. STC and OITC ratings are tested in accordance with ASTM E 90-09. See the Product Performance chapter for values.

WEATHER STRIP:
All units have full perimeter frame weather strip. The operating panel is sealed to the frame using a flexible bulb gasket with leaf weather strip. The stationary panel is sealed to the header using a flexible leaf weather strip. The meeting stiles are sealed using an interlock with a fin seal pile weather strip. The operating panel has a drip seal with a fin seal pile weather strip at the bottom. All weather strip is beige colored PVC standard.

SCREEN:
Top–hung extruded aluminum screens are available as an option. Single operating screen only. Aluminum metal to match exterior Ultrex color. Charcoal color fiberglass (non–corrosive) screen material. Includes all mounting and latching hardware. Non–handed.

REMOVABLE INTERIOR GRILLES:
Bar: Pine wood, 3/4″ (19 mm) Pattern: Standard rectangular pattern. Available in Pine bare wood or factory applied white interior finish.

INTERIOR / EXTERIOR SIMULATED DIVIDED LITES (SDL):
Interior bar: 7/8″ (22 mm) wide bars. Pine bare wood or factory applied white finish, to match interior. Exterior bar: Ultrex, 7/8″ (22 mm) wide bars, finish to match exterior. Pattern: Standard rectangular pattern, 9 lite prairie cut per panel, 6 lite prairie cut on transom or Cottage style cut.

GRILLES–BETWEEN–THE–GLASS (GBG):
11/16″ (17 mm) contoured aluminum bar placed between two panes of glass. Pattern: Standard rectangular pattern, or 9 lite prairie cut per panel or 6 lite prairie cut on transom. Exterior color determined by frame color. White interior.

EXTERIOR CASING:
Non–integral to the unit. Fastened to the exterior wall with barb and kerf 2″ (51) brick mould available as a header and jamb surround. 3 1/2″ (89) flat casing available as a header and jamb surround. Also available with 1″ (25) ranch style header overhang.

This page intentionally left blank.
NFRC Values are now located on www.integritywindows.com.

SLIDING PATIO DOOR

EGRESS, LITE, AND VENT MEASUREMENTS

EGRESS, LITE, AND VENT MEASUREMENTS								
	UNIT #	DAYLIGHT OPENING WIDTH PER PANEL	DAYLIGHT OPENING HEIGHT PER PANEL	LITE Sq. ft	VENT Sq. ft	EGRESS WIDTH	EGRESS HEIGHT	EGRESS Sq. ft
SLIDING PATIO DOOR								
ISPD	5065 2 panel door	25″	72 9/16″	25.19	12.29	23.51	75.32	12.29
	6065 2 panel door	31″	72 9/16″	31.24	15.43	29.51	75.82	15.43
	5068 2 panel door	25″	75 1/16″	26.06	12.70	23.51	77.32	12.70
	6068 2 panel door	31″	75 1/16″	32.32	15.95	29.51	77.82	15.95
3 PANEL	9068 3 panel door	31″	75 1/16″	48.48	15.95	29.51	77.82	15.95
SLIDING PATIO DOOR TRANSOM								
ISPDDG	7216 2 panel door	66 5/8″	11 3/8″	5.26				
ISPDDG	10716 2 panel door	102 1/8″	11 3/8″	5.26				

EGRESS MEASUREMENTS

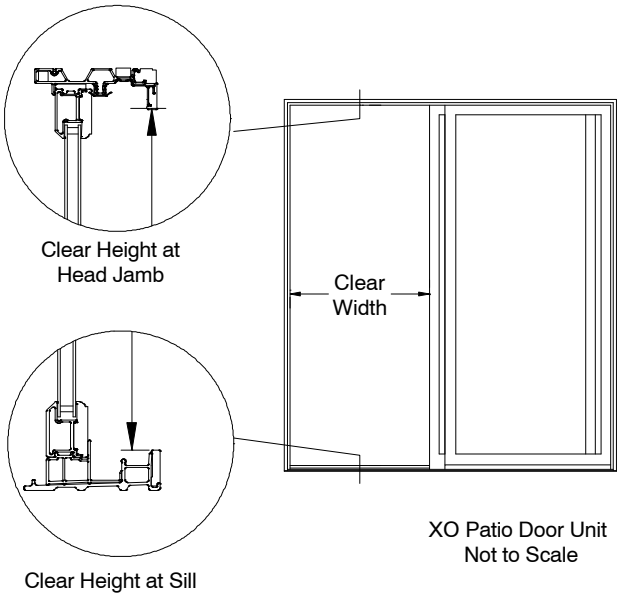

Code restrictions may vary depending on your local building codes.
For additional information contact your local code department for IBC and IRC requirements.

Standard Size Door Units					
Door Call Number	Outside Frame Width		Outside Frame Height		Number of Panels
	ft –in	mm	ft–in	mm	
5065	4–11	1499	6–7 1/2	2019	2
5068	4–11	1499	6–10	2083	2
6065	5–11	1803	6–7 1/2	2019	2
6068	5–11	1803	6–10	2083	2
9068	8–10 1/2	2705	6–10	2083	3

SLIDING PATIO DOOR

SIZING GUIDELINES

Multiple assemblies can be factory mulled:
up to 1 unit wide by 2 units high

FACTORY MULLED MAXIMUM ROUGH OPENING not to exceed 72″ X 100 1/2″

NOTE: FIELD MULLING BEYOND 110″ x 112″ IS NOT RECOMMENDED.

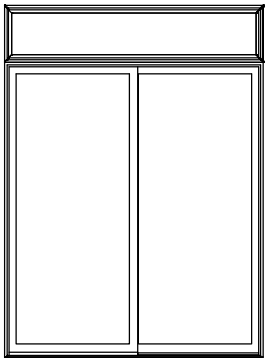

ROUGH OPENING TABLE FOR ASSEMBLIES

HEIGHT: Single unit Rough Opening height MINUS 1/2″ = Frame height.
ADD **all** frame heights PLUS 1/2″ = Total Rough Opening height.

NOTE: Assemblies with 6 9/16″ or 6 13/16″ jambs add 1/4″ to width and 1/8″ to height of Rough Opening.

MEASUREMENT CONVERSIONS				
PATIO DOOR	**WIDTH**		**HEIGHT**	
Rough Opening to	**Imperial**	**Metric**	**Imperial**	**Metric**
Masonry Opening	– 1/2″	– 13 mm	– 1/4″	– 6 mm
OM of Frame	– 1″	– 25 mm	– 1/2″	– 13 mm
OM of Panel (2 wide)	(÷ 2) – 3/8″	(÷ 2) – 10 mm	– 2 13/16″	– 71 mm
OM of Panel (3 wide)	(÷ 3) – 3/16″	(÷ 3) – 5 mm	– 2 13/16″	– 71 mm
Daylight Opening (2 wide)	(÷ 2) – 5″	(÷ 2) – 127 mm	– 7 7/16″	– 189 mm
Daylight Opening (3 wide)	(÷ 3) – 4 13/16″	(÷ 3) – 123 mm	– 7 7/16″	– 189 mm
OM of Glass (2 wide)	(÷ 2) – 3 3/4″	(÷ 2) – 95 mm	– 6 1/4″	– 159 mm
OM of Glass (3 wide)	(÷ 3) – 3 9/16″	(÷ 3) – 91 mm	– 6 1/4″	– 159 mm
OM of Screen (2 wide)	(÷ 2) – 13/16″	(÷ 2) – 21 mm	– 2 1/4″	– 57 mm
OM of Screen (3 wide)	(÷ 3) – 5/8″	(÷ 3) – 16 mm	– 2 1/4″	– 57 mm
TRANSOM				
Masonry Opening	– 1/2″	– 13 mm	– 1/4″	– 6 mm
OM of Frame	– 1″	– 25 mm	– 1/2″	– 13 mm
Daylight Opening	– 5 3/8″	– 137 mm	– 4 7/8″	– 124 mm
OM of Glass	– 3 13/16″	– 97 mm	– 3 5/16″	– 84 mm

SLIDING PATIO DOOR

ELEVATIONS 2 AND 3 PANEL DOORS / TRANSOMS Not To Scale

Mas. Opg.	4–11 1/2	(724)	5–11 1/2	(1816)
Rhg. Opg.	5–0	(737)	6–0	(1829)
Frame Size	4–11	(711)	5–11	(1803)

6–7 3/4 (2026)
6–8 (2032)
6–7 1/2 (2019)

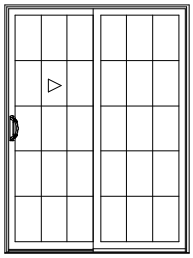

ISPD5065 XO

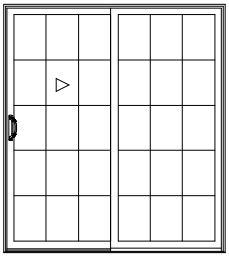

ISPD6065 XO

Mas. Opg.	4–11 1/2	(724)	5–11 1/2	(1816)
Rhg. Opg.	5–0	(737)	6–0	(1829)
Frame Size	4–11	(711)	5–11	(1803)

6–10 1/4 (2089)
6–10 1/2 (2096)
6–10 (2083)

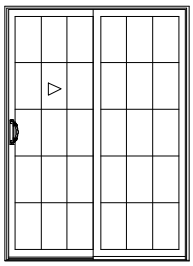

ISPD5068 XO

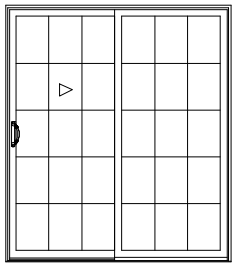

ISPD6068 XO

Mas. Opg.	8–11	(2718)
Rhg. Opg.	8–11 1/2	(2731)
Frame Size	9–10 1/2	(2705)

6–10 1/4 (2089)
6–10 1/2 (2096)
6–10 (2083)

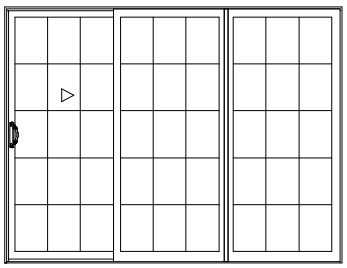

ISPD9068 XOO

6–10 1/4 (2089)
6–10 1/2 (2096)
6–10 (2083)

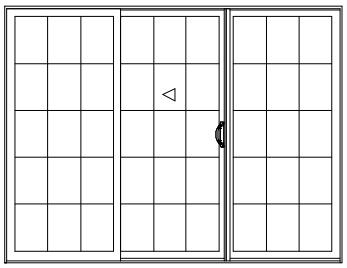

ISPD9068 OXO

Mas. Opg.
Rhg. Opg.
Frame Size

STANDARD TRANSOMS

Mas. Opg.	5–11 1/2	(1816)
Rhg. Opg.	6–0	(1829)
Frame Size	5–11	(1803)

(406)
(413)
(400)
1–4
1–4 1/4
1–3 3/4

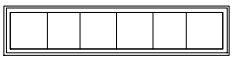

ISPDDG 7216

8–11	(2718)
8–11 1/2	(2731)
9–10 1/2	(2705)
103 11/16″	(1732)

(406)
(413)
(400)
1–4
1–4 1/4
1–3 3/4

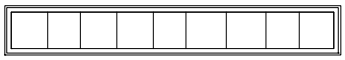

ISFDG 10716

Mas. Opg.
Rhg. Opg.
Frame Size

NOTE:
SDL and GBG lite cut is not equal, to align with Patio Door.

Equal lites are available.

Transoms with SDL or GBG lites may be manufactured to align with pattern below in door. Lite cut of GBG will only align with lite cut of door it is intended for.

OPERATION

2 Panel Units

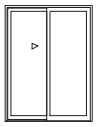

XO

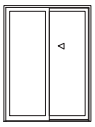

OX

3 Panel Units

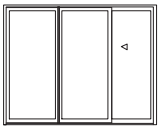

OOX

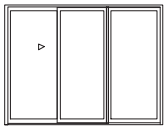

XOO

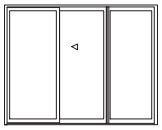

OXO Left

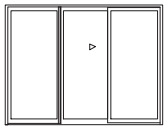

OXO Right

O = Stationary Panel
X = Operating Panel

All units viewed from exterior.

NOTE:
Round top transoms available for field assembly, refer to round top chapter for more information.

One lite is standard, elevations are shown with rectangular lite pattern. Round top transoms available for field assembly, refer to round top chapter. Imperial and metric dimensions are shown metric dimensions are in millimeters.

Imperial and metric dimensions are shown metric dimensions are in millimeters.

SLIDING PATIO DOOR

SECTION DETAILS Scale 3″ = 1′ 0″

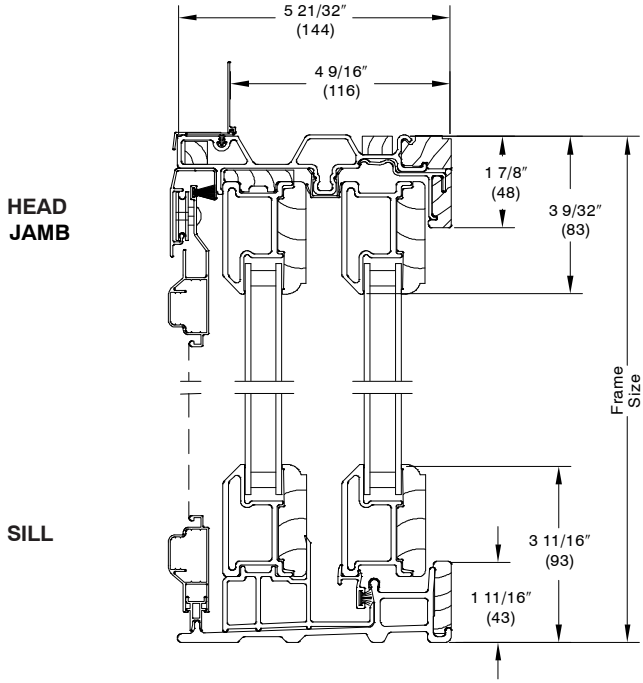

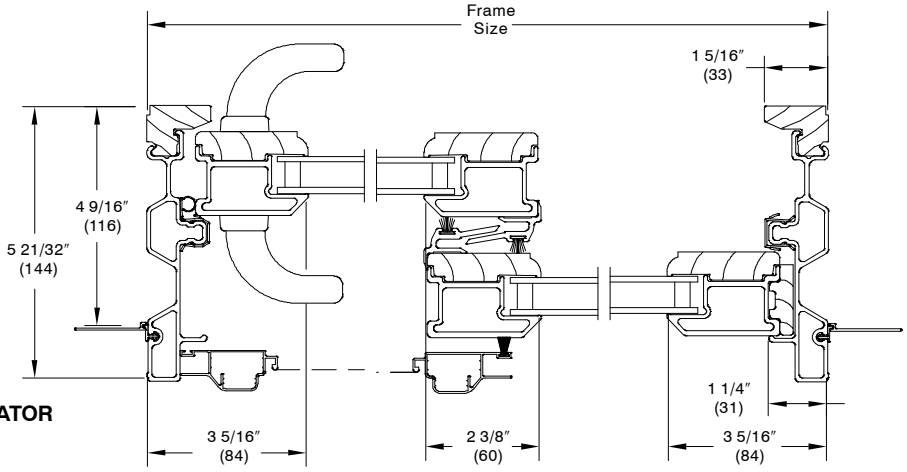

2 PANEL XO OPERATOR JAMB DETAIL

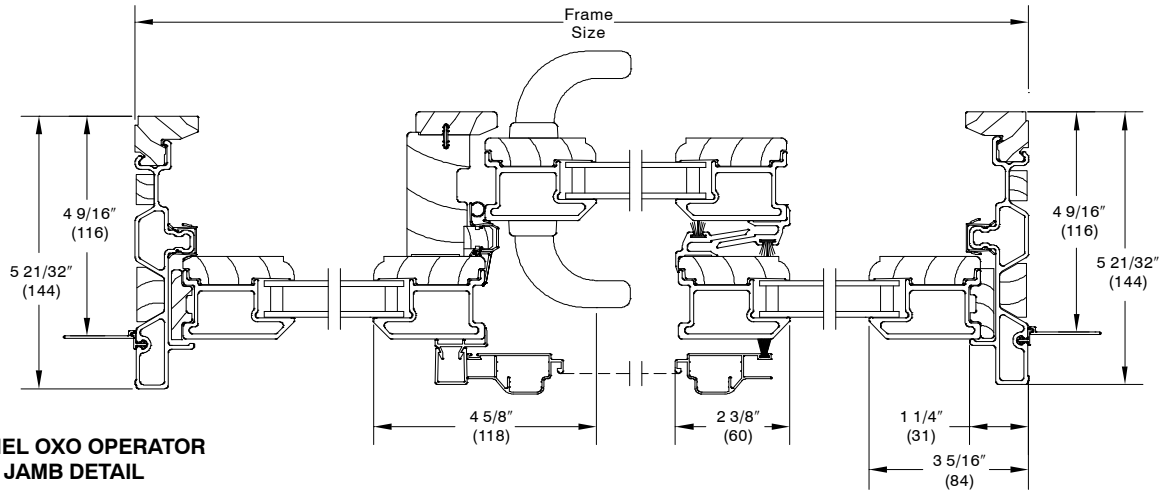

3 PANEL OXO OPERATOR JAMB DETAIL

SLIDING PATIO DOOR

SECTION DETAILS – 6 9/16″ Jambs Scale 3″ = 1′ 0″

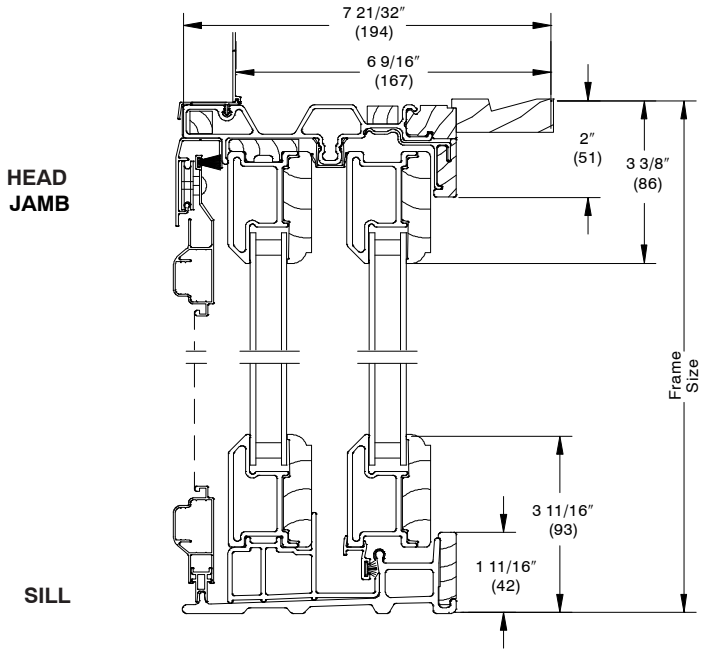

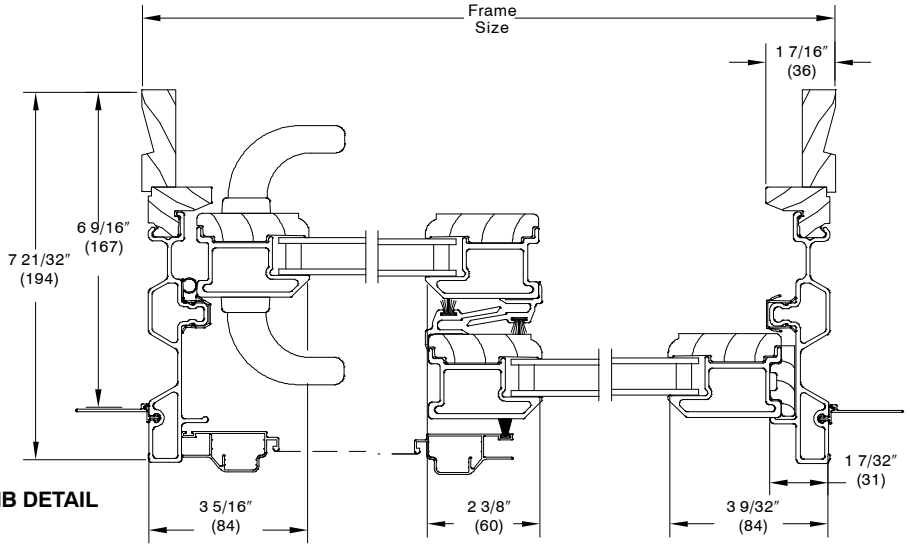

2 PANEL XO OPERATOR JAMB DETAIL

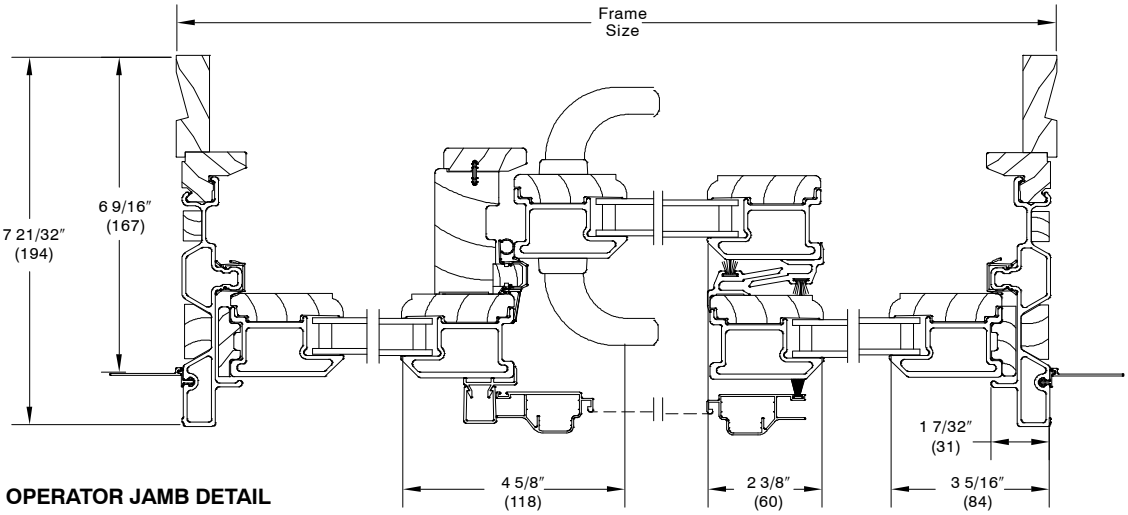

3 PANEL OXO OPERATOR JAMB DETAIL

SECTION DETAILS – DIRECT GLAZE TRANSOM AND MULLIONS

4 9/16″ Jambs

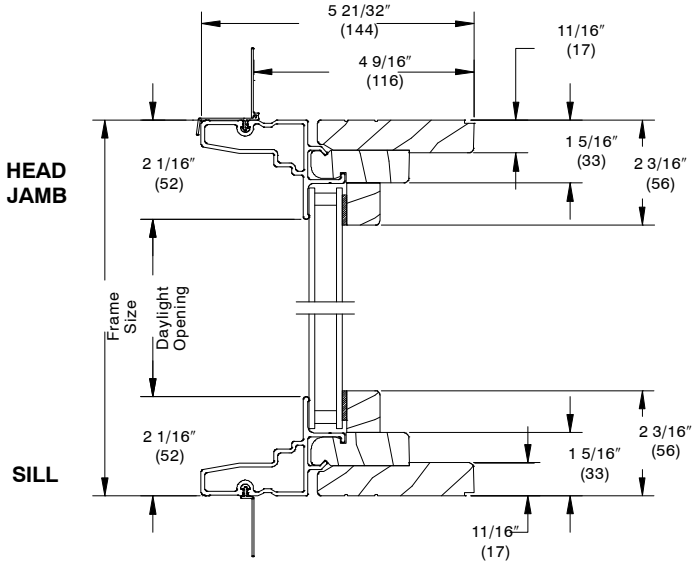

6 9/16″ Jambs

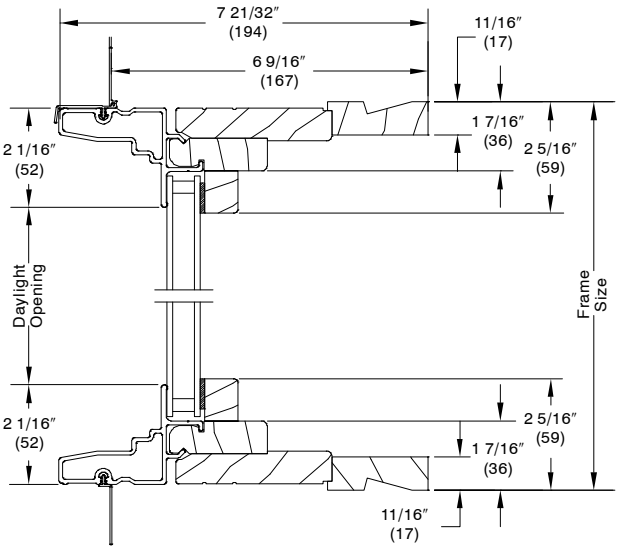

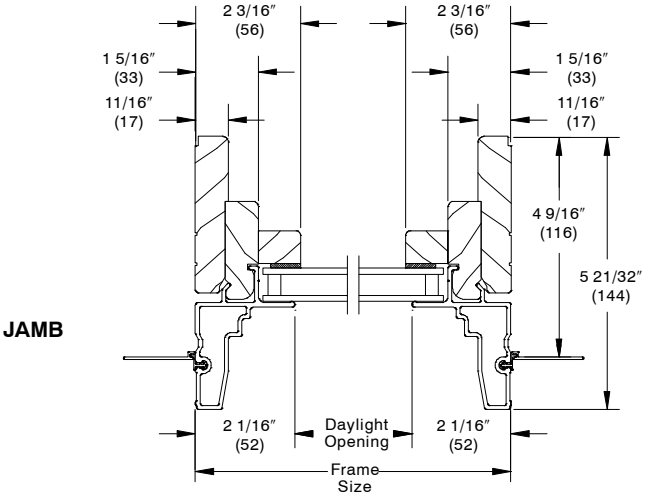

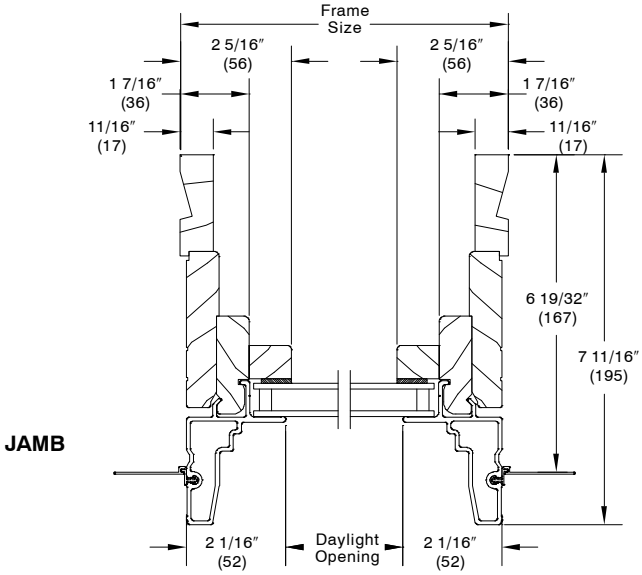

MULLIONS

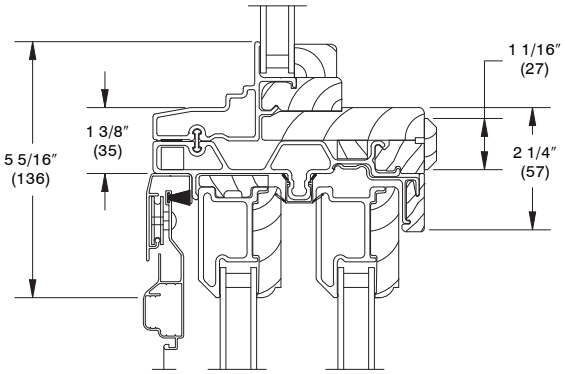

DIRECT GLAZE TRANSOM OVER PATIO DOOR

DIVIDED LITE OPTIONS

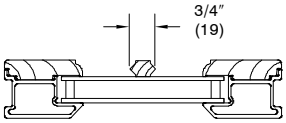

WOOD REMOVABLE GRILLE

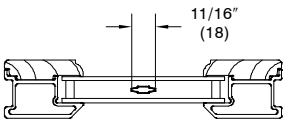

ALUMINUM GRILLE BETWEEN GLASS

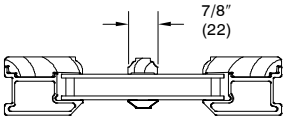

SIMULATED DIVIDED LITE

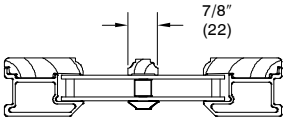

SIMULATED DIVIDED LITE WITH SPACER BAR

RECTANGLE SDL EXAMPLE SHOWN

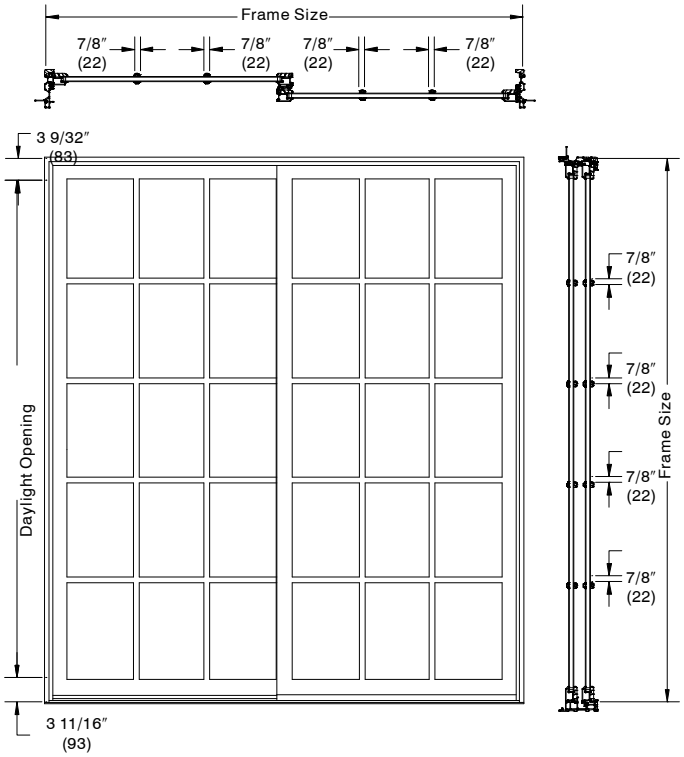

GBG or SDL

* 6 lite prairie lite cuts on ISPDG 7216 or ISPDG 10716 due to height limitations. GBGs not available in ISPDG 10716.

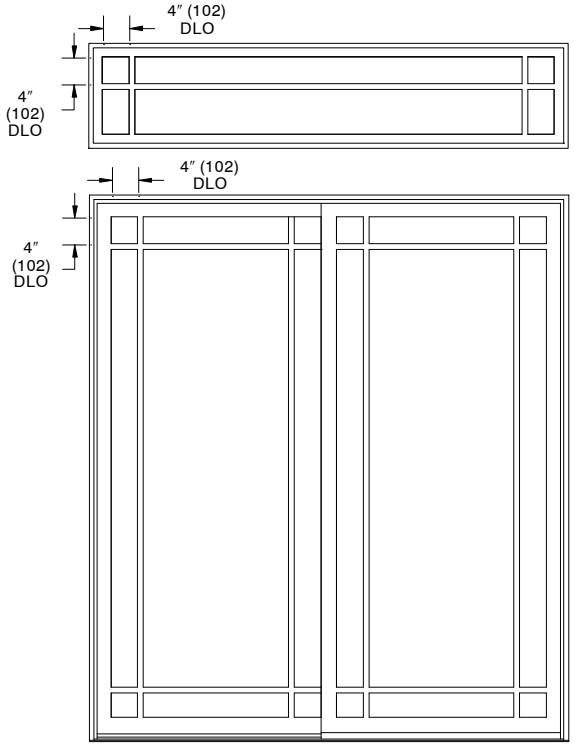

NOTE: * Optional 9 lite per panel Prairie cut.

Conversion Formula:

$$\frac{\text{Total DLO} - \text{Total bar width}}{\text{Number of lites}} = \text{Individual DLO}$$

COTTAGE LITE CUT

* Horizontal bar is placed at 10″ (254) daylight opening.
* Only available in SDL.

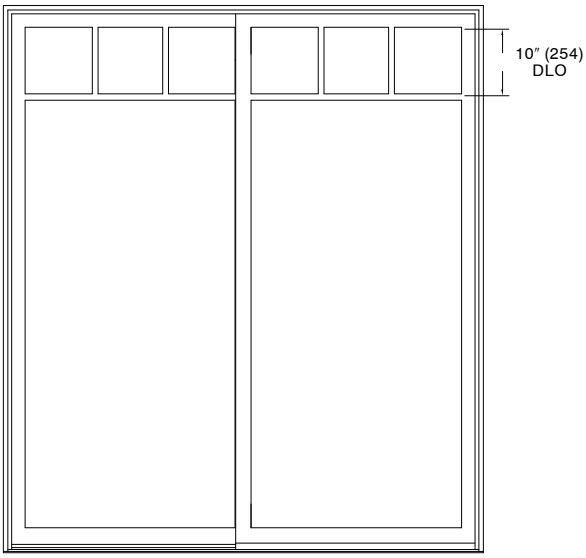

SLIDING PATIO DOOR

AVAILABLE DIVIDED LITE PATTERNS

CN	Rectangular			Prairie	
	Wood Grille	GBG or SDL		GBG	SDL
SLIDING PATIO DOOR per panel					
5065	3W5H	3W5H	2W5H	9–Lite	9–Lite
5068	3W5H	3W5H	2W5H	9–Lite	9–Lite
6065	3W5H	3W5H	2W5H	9–Lite	9–Lite
6068	3W5H	3W5H	2W5H	9–Lite	9–Lite
9068	3W5H	3W5H	2W5H	9–Lite	9–Lite
DIRECT GLAZE TRANSOM per unit					
7216	6W1H	6W1H	4W1H	6–Lite Top	6–Lite Top
10716	9W1H	9W1H	6W1H	N/A	N/A

Cottage Lite Cuts			
CN Width	Product	Lite Cut Wide (per panel)	Total Lites per Unit
50	Sliding Patio Door	3	8
60	Sliding Patio Door	4	8
90	Sliding Patio Door	5	12

Notes:

- Direct Glaze Transoms with GBGs or SDL will only align with the cut of the door it is intended to be mulled with and may not have equally spaced lites unless otherwise indicated. For alternative GBG or SDL lite alignment, order a Direct Glaze Rectangle with the divided lite option.
- An ISPDDG 7216 with GBGs or SDL will align over an ISPD CN60 width only.
- An ISPDDG 10716 is available field–mulled or stand–alone only. Rectangular GBGs or SDL in a field–mulled ISPDDG 10716 will align over an ISPD 9068 only. Rectangular GBGs or SDL in a stand–alone ISPDDG 10716 will be equally spaced.

SLIDING PATIO DOOR

INSTALLATION SUGGESTION Scale 3″ = 1′ 0″

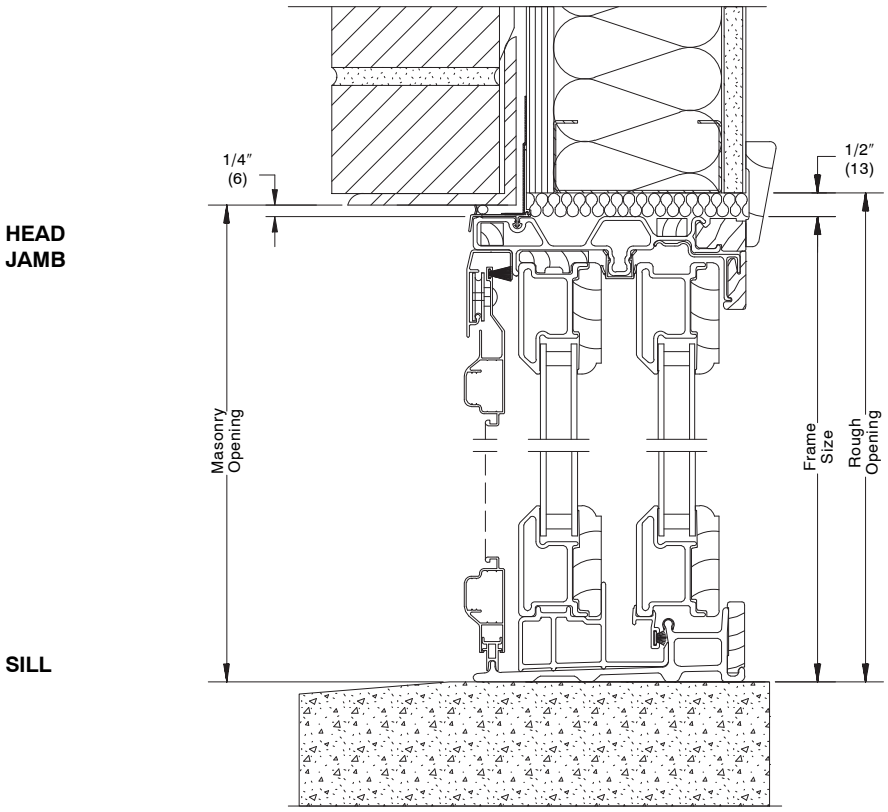

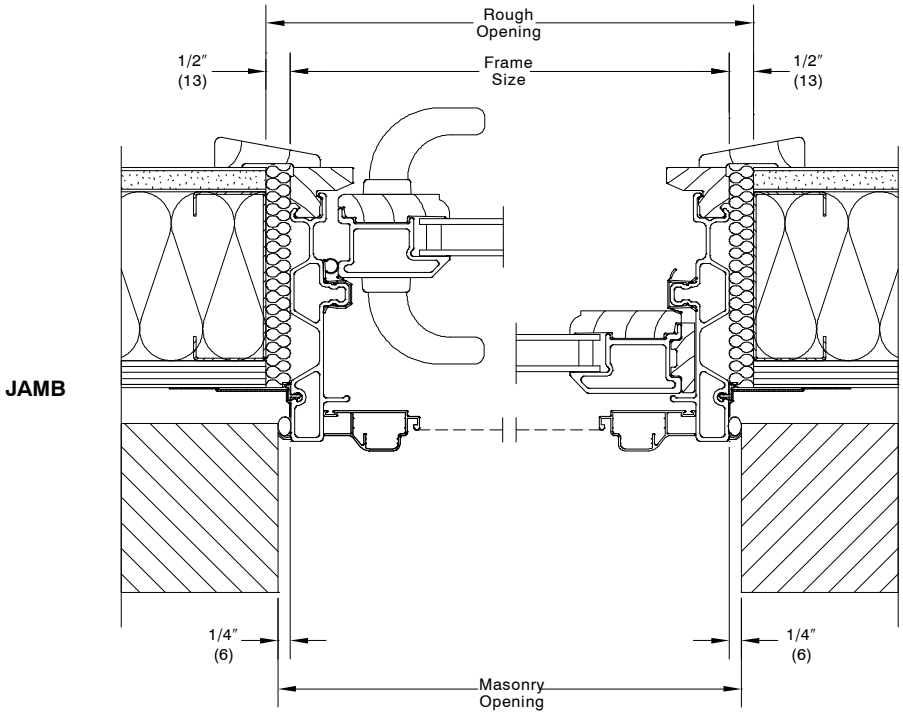

BRICK VENEER WITH STEEL FRAME CONSTRUCTION

NOTE:
The above wall sections represent typical wall conditions, these details are not intended as installation instructions. Please refer to the installation instructions provided with the purchased units.

SLIDING PATIO DOOR

INSTALLATION SUGGESTION Scale 3″ = 1′ 0″

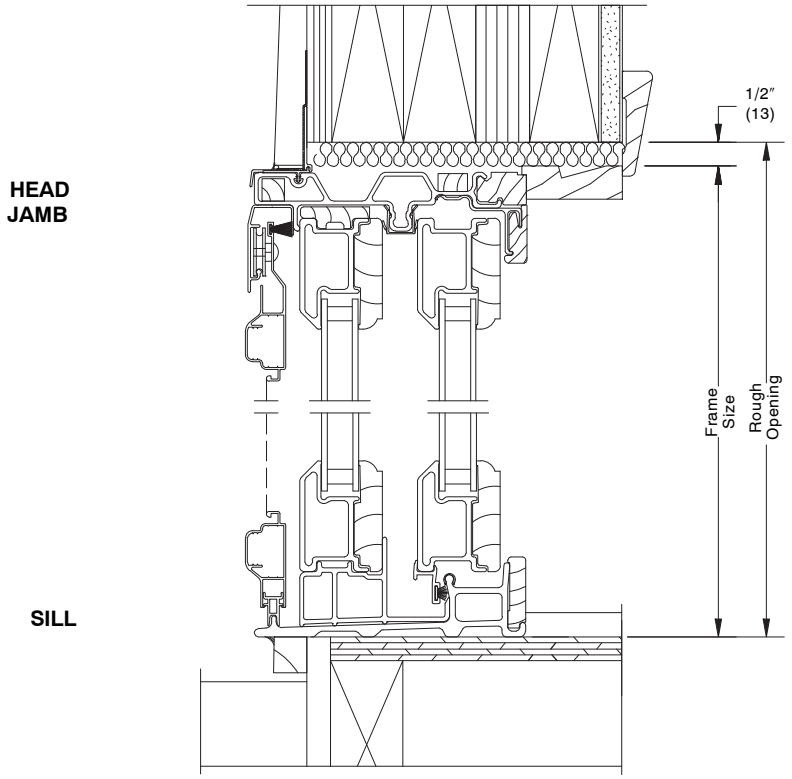

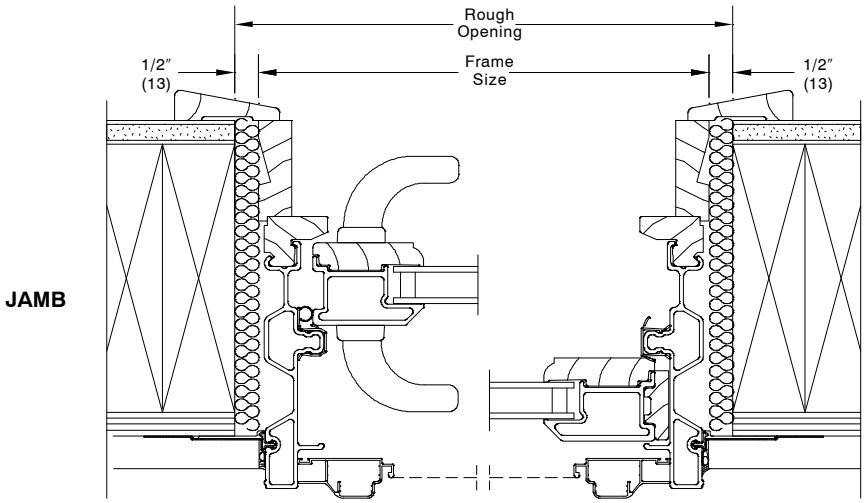

WOOD SIDING WITH 2X6 FRAME CONSTRUCTION

NOTE:
The above wall sections represent typical wall conditions, these details are not intended as installation instructions. Please refer to the installation instructions provided with the purchased units.

SLIDING PATIO DOOR

INSTALLATION SUGGESTION Scale 3″ = 1′ 0″

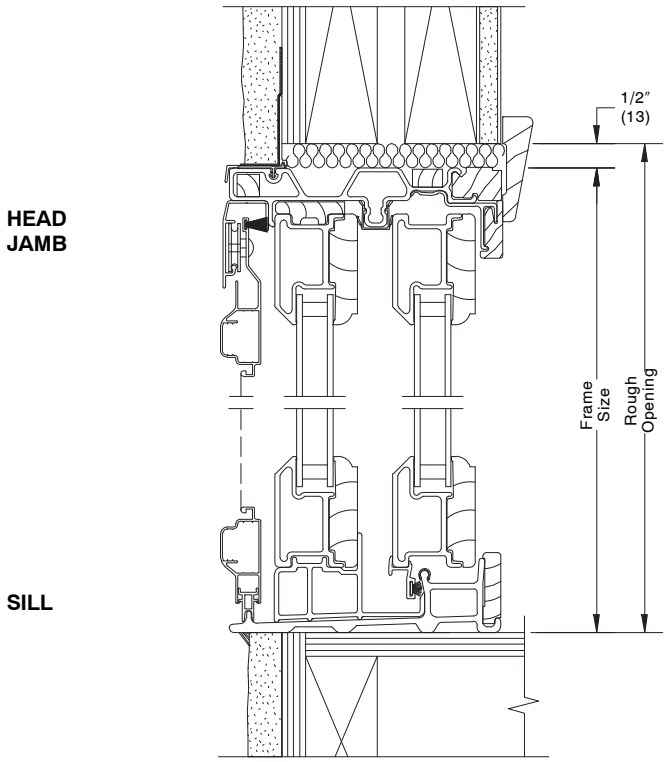

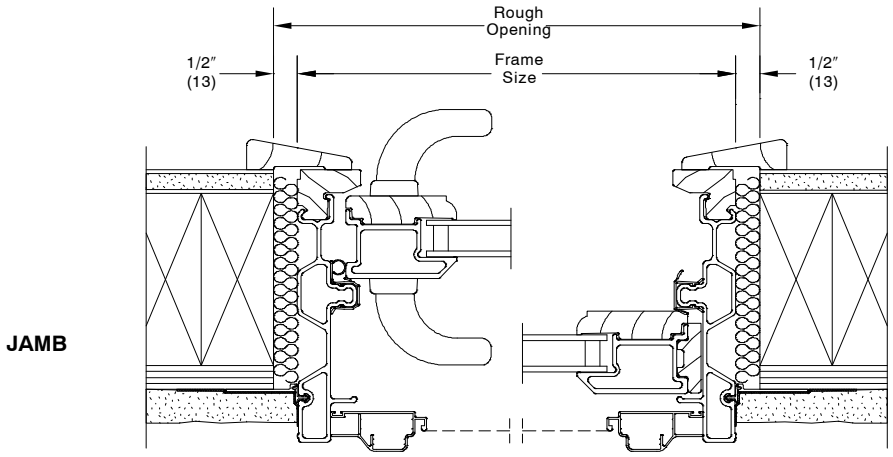

STUCCO WITH 2X4 FRAME CONSTRUCTION

NOTE:
The above wall sections represent typical wall conditions, these details are not intended as installation instructions. Please refer to the installation instructions provided with the purchased units.