CHAPTER 13

INTEGRITY ALL ULTREX GLIDER

Unit Features 13.2
Certified Sizes and Ratings 13.3
Minimum and Maximum Size Guidelines / Egress Formula 13.4
Egress, Lite and Vent Measurements – XO, OX 13.5
Egress, Lite and Vent Measurements – XOX 13.6
Sizing Guidelines / Measurement Conversions 13.7
Elevations – XO, OX 13.8
Elevations – Triple Sash – XOX 13.9
Section Details – XO, OX 13.10
Section Details – Triple Sash XOX 13.11
Section Details – Mullions 13.12
Divided Lite Options 13.13
Installation Suggestions 13.14

ATTENTION:

- Specifications and technical data are subject to change without notice.
- Allow 1/16″ (1.59 mm) tolerance on all measurements.
- For answers to technical questions about Integrity products you may call our Integrity Support Line: 1–800–587–2712.
- Website: www.integritywindows.com

ALL ULTREX GLIDER

UNIT FEATURES

FRAME:
The frame is made of Ultrex®, an advanced fiber reinforced material that is exceptionally resistant to thermal conductance. Ultrex patented coating system meets all the requirements of AAMA 623-10. Exterior coating shall meet AAMA 623–10 and 00022716 in stone white, pebble gray, bronze, evergreen, cashmere and ebony. Interior color coatings shall meet AAMA 00022716 in stone white. Composite frame thickness is 1 3/8″ (35mm). Frame width of 3 3/32″ (79 mm). Ultrex is .065″ – .070″ (2mm) thick.

SASH:
The sash is made of Ultrex®, an advanced fiber reinforced material that is exceptionally resistant to thermal conductance. Composite sash thickness of 15/16″ (24mm). Ultrex is .065″ – .070″ (2mm) thick. Color: stone white, pebble gray, evergreen, cashmere or ebony exterior and stone white interior.

JAMB EXTENSION:
2″ (51 mm) is standard. 4 9/16″ (116 mm) and 6 9/16″ (167 mm) maintenance free jamb extension available.

HARDWARE:
High pressure zinc die cast meeting stile lock and keeper. Lock employs a cam–lock mechanism. Two locks are on units taller than CN26. Color: stone white. Optional almond frost, brass, satin nickel and oil rubbed bronze hardware finishes. Lock, keeper and fasteners will be available in each of the additional hardware finish options. Tilt latches and sash pull will remain white, regardless of which hardware finish is selected. Operator sash meeting stile employs tilt latches to allow for easy tilting of sash. Sash pull, color: stone white. Optional vent stop, a sash travel limiting and venting device. Also available are optional sash limiter kits and non–operable lock component kits.

INSTALLATION:
Factory applied folding nailing fin. Optional through jamb installation method with brackets. Factory supplied field mulling kits are available for standard assemblies.

GLAZING:
All units are manufactured with a 11/16″ (17mm) IG with LoĒ^{2}–272®, LoĒ^{3}–366® or LoĒ–180™ coatings including argon gas fill. Tempered glass and/or obscure glass are available as an option. All glass is of a select quality complying with ASTM C 1036. Insulating glass is manufactured and tested to pass level ASTM E 2190 and is IGCC certified. The glazing seal is a silicone bedding on both interior and exterior surfaces utilized in a sandwich style sash. STC/OITC values are available for 3.1/3.1 standard glass. Optional 3.1/4.7 STC/OITC Upgrade glass is available. STC and OITC ratings are tested in accordance with ASTM E 90-09. See the Product Performance chapter for values.

WEATHER STRIP:
Sill weather strip is foam filled vinyl bulb. The operating sash is sealed to the jambs using rigid vinyl with flexible seals. The stationary sash seal is foam tape. The meeting stiles are sealed using rigid vinyl with flexible seals.

SCREEN:
Charcoal color fiberglass (non–corrosive) screen cloth, 18 x 16 mesh, set in a stone white, pebble gray, bronze, evergreen, cashmere or ebony color aluminum frame to match the exterior Ultrex.

GRILLES–BETWEEN–THE–GLASS:
Grilles–Between–the–Glass (GBGs) are manufactured from aluminum in an 11/16″ (17 mm) wide contoured profile placed between the two panes of glass. Color: stone white, pebble gray, bronze, evergreen, cashmere or ebony exterior and stone white interior. Pattern: Standard rectangular pattern, or optional 9 lite per sash Prairie cut within size limitations.

ACCESSORIES:
Field applied : J channel, a 1″(25) or 3″(76) frame expander , or flush fin installation kit. Factory applied: sheet rock return for 1/2″(13) or 5/8″(16) drywall, a 3/4″(19) receiver, a frame fill or a flush fin. General: mull kits are available for field assembly. Kits include: instructions, mull cover, mull plugs and brackets.

EXTERIOR CASING:
Non–integral to the unit. Fastened to the exterior wall with barb and kerf 2” brick mould as a full surround or with sill nosing. 3 ½” flat casing available as full surround or with sill nosing. Also available with 1” ranch style sill and header overhang.

ALL ULTREX GLIDER

CERTIFIED SIZES AND RATINGS

All Ultrex Glider – XO/OX Units								
Nominal Height	Frame Height inches	Nominal Width Frame Width, inches						
		2–6	3–0	3–6	4–0	4–6	5–0	6–0
		29.5	35.50	41.50	47.50	53.50	59.50	71.50
1–6	17.50	DP40	DP40	DP40	DP40	DP40	DP40	DP40
2–0	23.50	DP40	DP40	DP40	DP40	DP40	DP40	DP40
2–6	29.50	DP40	DP40	DP40	DP40	DP40	DP40	DP40
3–0	35.50	DP40	DP40	DP40	DP40	DP40	DP40	DP40
3–6	41.50	DP40	DP40	DP40	DP40	DP40	DP40	DP40
4–0	47.50	DP40	DP40	DP40	DP40	DP40	DP30	DP30
4–6	53.50	DP40	DP40	DP40	DP40	DP40	DP30	DP30
5–0	59.50	DP40	DP40	DP40	DP40	DP40	DP30	DP30

All Ultrex Glider – XOX Units				
Nominal Height	Frame Height inches	Nominal Width Frame Width, inches		
		6–0	7–0	8–0
		71.50	83.50	92.50
1–6	17.50	DP25	DP25	DP25
2–0	23.50	DP25	DP25	DP25
2–6	29.50	DP25	DP25	DP25
3–0	35.50	DP25	DP25	DP25
3–6	41.50	DP25	DP25	DP25
4–0	47.50	DP25	DP25	DP25
4–6	53.50	DP25	DP25	DP25
5–0	59.50	DP25	DP25	DP25

ALL ULTREX GLIDER

MINIMUM AND MAXIMUM SIZE GUIDELINES / EGRESS FORMULA

PRODUCT TYPE	MINIMUM F.S. WIDTH	MINIMUM F.S. HEIGHT	MAXIMUM F.S. WIDTH	MAXIMUM F.S. HEIGHT
ALL ULTREX GLIDER (IFGL)	29 1/2″ (749)	17 1/2″ (445)	71 1/2″ (1816)	59 1/2″ (1511)
ALL ULTREX GLIDER TRIPLE SASH (IFGLTS)	71 1/2″ (1816)	17 1/2″ (445)	95 1/2″ (2426)	59 1/2″ (1511)

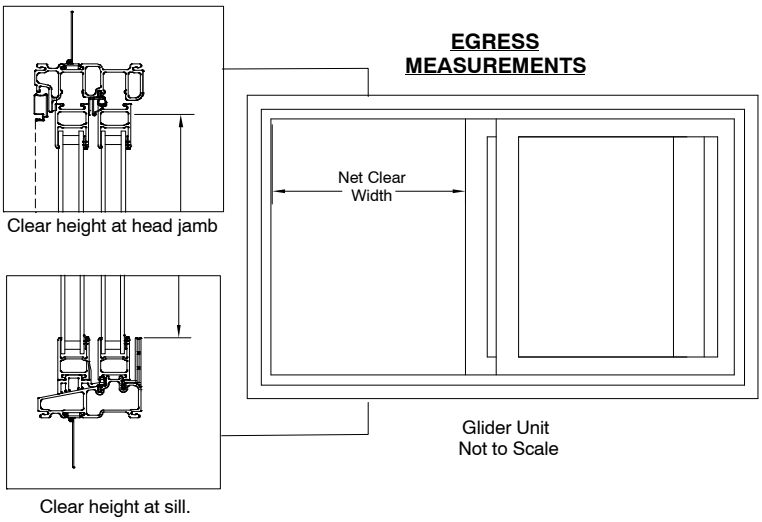

Code restrictions may vary depending on your local building codes.
For additional information contact your local code department for IBC and IRC requirements.

EGRESS FORMULA:

[Frame O.M. Width ÷ 2] – 2.942″ = Egress Opening Width

Frame O.M. Height – 3.866″ = Egress Opening Height

[Egress Width x Egress Height] ÷ 144 = Egress Opening Square Feet

ALL ULTREX GLIDER

EGRESS, LITE, AND VENT MEASUREMENTS – XO / OX

EGRESS, LITE, AND VENT MEASUREMENTS									
UNIT #		DAYLIGHT OPENING WIDTH	DAYLIGHT OPENING HEIGHT	DAYLIGHT OPENING Sq. ft BOTH SASH	VENT Sq. ft	EGRESS WIDTH	EGRESS HEIGHT	EGRESS Sq. ft	FLOOR TO CLEAR OPENING*
ALL ULTREX GLIDER									
IFGL	2616	11 5/16″	12 9/16″	1.71	1.12	11.81	13.63	1.12	66.65
	2620	11 5/16″	18 9/16″	2.53	1.61	11.81	19.63	1.61	60.65
	2626	11 5/16″	24 9/16″	3.35	2.1	11.81	25.63	2.1	54.65
	2630	11 5/16″	30 9/16″	4.16	2.59	11.81	31.63	2.59	48.65
	2636	11 5/16″	36 9/16″	4.98	3.09	11.81	37.63	3.09	42.65
	2640	11 5/16″	42 9/16″	5.8	3.58	11.81	43.63	3.58	36.65
	2646	11 5/16″	48 9/16″	6.62	4.07	11.81	49.63	4.07	30.65
	2650	11 5/16″	54 9/16″	7.43	4.56	11.81	55.63	4.56	24.65
	3016	14 5/16″	12 9/16″	2.23	1.4	14.81	13.63	1.4	66.65
	3020	14 5/16″	18 9/16″	3.3	2.02	14.81	19.63	2.02	60.65
	3026	14 5/16″	24 9/16″	4.37	2.64	14.81	25.63	2.64	54.65
	3030	14 5/16″	30 9/16″	5.44	3.25	14.81	31.63	3.25	48.65
	3036	14 5/16″	36 9/16″	6.5	3.87	14.81	37.63	3.87	42.65
	3040	14 5/16″	42 9/16″	7.57	4.49	14.81	43.63	4.49	36.65
	3046	14 5/16″	48 9/16″	8.64	5.10	14.81	49.63	5.10	30.65
	3050	14 5/16″	54 9/16″	9.71	5.72	14.81	55.63	5.72	24.65
	3616	17 5/16″	12 9/16″	2.76	1.69	17.81	13.63	1.69	66.65
	3620	17 5/16″	18 9/16″	4.08	2.43	17.81	19.63	2.43	60.65
	3626	17 5/16″	24 9/16″	5.39	3.17	17.81	25.63	3.17	54.65
	3630	17 5/16″	30 9/16″	6.71	3.91	17.81	31.63	3.91	48.65
	3636	17 5/16″	36 9/16″	8.03	4.65	17.81	37.63	4.65	42.65
	3640	17 5/16″	42 9/16″	9.35	5.4	17.81	43.63	5.4	36.65
	3646	17 5/16″	48 9/16″	10.66	6.14	17.81	49.63	6.14	30.65
	3650	17 5/16″	54 9/16″	11.98	6.88	17.81	55.63	6.88	24.65
	4016	20 5/16″	12 9/16″	3.28	1.97	20.81	13.63	1.97	66.65
	4020	20 5/16″	18 9/16″	4.85	2.84	20.81	19.63	2.84	60.65
	4026	20 5/16″	24 9/16″	6.42	3.70	20.81	25.63	3.70	54.65
	4030	20 5/16″	30 9/16″	7.98	4.57	20.81	31.63	4.57	48.65
	4036	20 5/16″	36 9/16″	9.55	5.44	20.81	37.63	5.44	42.65
	4040E	20 5/16″	42 9/16″	11.12	6.31	20.81	43.63	6.31	36.65
	4046E	20 5/16″	48 9/16″	12.69	7.17	20.81	49.63	7.17	30.65
	4050E	20 5/16″	54 9/16″	14.25	8.04	20.81	55.63	8.04	24.65
	4616	23 5/16″	12 9/16″	3.8	2.25	23.81	13.63	2.25	66.65
	4620	23 5/16″	18 9/16″	5.62	3.25	23.81	19.63	3.25	60.65
	4626	23 5/16″	24 9/16″	7.44	4.24	23.81	25.63	4.24	54.65
	4630	23 5/16″	30 9/16″	9.26	5.23	23.81	31.63	5.23	48.65
	4636E	23 5/16″	36 9/16″	11.07	6.22	23.81	37.63	6.22	42.65
	4640E	23 5/16″	42 9/16″	12.89	7.21	23.81	43.63	7.21	36.65
	4646E	23 5/16″	48 9/16″	14.71	8.21	23.81	49.63	8.21	30.65
	4650E	23 5/16″	54 9/16″	16.53	9.2	23.81	55.63	9.2	24.65
	5016	26 5/16″	12 9/16″	4.33	2.54	26.81	13.63	2.54	66.65
	5020	26 5/16″	18 9/16″	6.4	3.66	26.81	19.63	3.66	60.65
	5026	26 5/16″	24 9/16″	8.46	4.77	26.81	25.63	4.77	54.65
	5030	26 5/16″	30 9/16″	10.53	5.89	26.81	31.63	5.89	48.65
	5036E	26 5/16″	36 9/16″	12.6	7.01	26.81	37.63	7.01	42.65
	5040E	26 5/16″	42 9/16″	14.67	8.12	26.81	43.63	8.12	36.65
	5046E	26 5/16″	48 9/16″	16.73	9.24	26.81	49.63	9.24	30.65
	5050E	26 5/16″	54 9/16″	18.8	10.36	26.81	55.63	10.36	24.65
	6016	32 5/16″	12 9/16″	5.37	3.11	32.81	13.63	3.11	66.65
	6020	32 5/16″	18 9/16″	7.94	4.47	32.81	19.63	4.47	60.65
	6026	32 5/16″	24 9/16″	10.51	5.84	32.81	25.63	5.84	54.65
	6030	32 5/16″	30 9/16″	13.08	7.21	32.81	31.63	7.21	48.65
	6036E	32 5/16″	36 9/16″	15.64	8.57	32.81	37.63	8.57	42.65
	6040E	32 5/16″	42 9/16″	18.21	9.94	32.81	43.63	9.94	36.65
	6046E	32 5/16″	48 9/16″	20.78	11.31	32.81	49.63	11.31	30.65
	6050E	32 5/16″	54 9/16″	23.35	12.68	32.81	55.63	12.68	24.65

NOTES:

E= These units meet national egress codes for fire evacuation. Local codes may differ.

***** Floor to clear opening is based on 6′–10 1/4″ from finished floor to rough opening header.

ALL ULTREX GLIDER

EGRESS. LITE, AND VENT MEASUREMENTS – XOX

EGRESS, LITE, AND VENT MEASUREMENTS									
UNIT #	EACH OPERATOR DAYLIGHT OPENING WIDTH	STATIONARY DAYLIGHT OPENING WIDTH	DAYLIGHT OPENING HEIGHT	DAYLIGHT OPENING Sq. ft	VENT Sq. ft	EGRESS WIDTH	EGRESS HEIGHT	EGRESS Sq. ft	FLOOR TO SILL HEIGHT*
GLIDER TRIPLE SASH									
6016	14 1/4″	34 1/8″	12 9/16″	5.47	2.81	14.81	13.63	1.40	66.65
6020	14 1/4″	34 1/8″	18 9/16″	8.09	4.04	14.81	19.63	2.02	60.65
6026	14 1/4″	34 1/8″	24 9/16″	10.71	5.27	14.81	25.63	2.64	54.65
6030	14 1/4″	34 1/8″	30 9/16″	13.32	6.51	14.81	31.63	3.25	48.65
6036	14 1/4″	34 1/8″	36 9/16″	15.94	7.74	14.81	37.63	3.87	42.65
6040	14 1/4″	34 1/8″	42 9/16″	18.55	8.98	14.81	43.63	4.49	36.65
6046	14 1/4″	34 1/8″	48 9/16″	21.17	10.21	14.81	49.63	5.11	30.65
6050	14 1/4″	34 1/8″	54 9/16″	23.78	11.45	14.81	55.63	5.72	24.65
7016	17 1/4″	40 1/8″	12 9/16″	6.52	3.37	17.81	13.63	1.69	66.65
7020	17 1/4″	40 1/8″	18 9/16″	9.64	4.86	17.81	19.63	2.43	60.65
7026	17 1/4″	40 1/8″	24 9/16″	12.75	6.34	17.81	25.63	3.17	54.65
7030	17 1/4″	40 1/8″	30 9/16″	15.87	7.83	17.81	31.63	3.91	48.65
7036	17 1/4″	40 1/8″	36 9/16″	18.98	9.31	17.81	37.63	4.66	42.65
7040	17 1/4″	40 1/8″	42 9/16″	22.10	10.80	17.81	43.63	5.40	36.65
7046	17 1/4″	40 1/8″	48 9/16″	25.21	12.28	17.81	49.63	6.14	30.65
7050	17 1/4″	40 1/8″	54 9/16″	28.33	13.77	17.81	55.63	6.88	24.65
8016	20 1/4″	46 1/8″	12 9/16″	7.57	3.94	20.81	13.63	1.97	66.65
8020	20 1/4″	46 1/8″	18 9/16″	11.18	5.68	20.81	19.63	2.84	60.65
8026	20 1/4″	46 1/8″	24 9/16″	14.80	7.41	20.81	25.63	3.71	54.65
8030	20 1/4″	46 1/8″	30 9/16″	18.41	9.15	20.81	31.63	4.57	48.65
8036	20 1/4″	46 1/8″	36 9/16″	22.03	10.88	20.81	37.63	5.44	42.65
8040E	20 1/4″	46 1/8″	42 9/16″	25.64	12.61	20.81	43.63	6.31	36.65
8046E	20 1/4″	46 1/8″	48 9/16″	29.26	14.35	20.81	49.63	7.17	30.65
8050E	20 1/4″	46 1/8″	54 9/16″	32.88	16.08	20.81	55.63	8.04	24.65

NOTES:

E= These units meet national egress codes for fire evacuation. Local codes may differ.

***** Floor to clear opening is based on 6′–10 1/4″ from finished floor to rough opening header.

***** Standard Configurations is 25 / 50 / 25.

ALL ULTREX GLIDER

SIZING GUIDELINES AND MEASUREMENT CONVERSIONS

MULTIPLE ASSEMBLIES – FACTORY MULL CONFIGURATIONS
Field mull kits are available. Mulling beyond limitations is not recommended.

MAXIMUM ROUGH OPENING ASSEMBLY UP TO 2W2H: 72″ (1829 mm) X 78″ (1981 mm)
MAXIMUM ROUGH OPENING ASSEMBLY UP TO 3W1H: 114″ (2896 mm) X 60″ (1524 mm)

CALCULATING TOTAL ROUGH OPENING FOR ASSEMBLIES

WIDTH: ADD Frame Widths + 1/2″ (13 mm) per mull + 1/2″ (13 mm).

HEIGHT: For field mulling requirements.

Tolerance = 1/4″ (6 mm) from frame to Rough Opening at left and right jamb.

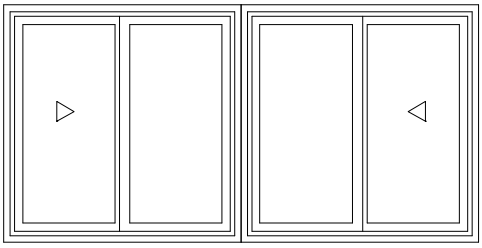

1 vertical mull

MEASUREMENT CONVERSIONS				
All Ultrex Glider	**WIDTH**		**HEIGHT**	
Rough Opening to	**Imperial**	**Metric**	**Imperial**	**Metric**
Masonry Opening	0″	0 mm	– 1/4″	– 6 mm
Frame OM	–1/2″	– 13 mm	– 1/2″	– 13 mm
Sash OM	(÷ 2) –1″	(÷ 2) – 25 mm	– 2 3/4″	– 70 mm
Daylight Opening	(÷ 2) – 3 11/16″	(÷ 2) – 94 mm	– 5 7/16″	– 138 mm
Glass Size	(÷ 2) –2 9/16″	(÷ 2) – 65 mm	– 4 5/16″	– 110 mm
Screen OM	(÷ 2) – 1″	(÷ 2) – 25 mm	– 2 1/16″	– 54 mm
J–Channel OM	+ 3/4″	+ 19 mm	+ 3/4″	+ 19 mm

For Triple Sash conversions, RO to Glass, Sash, and Screens, please contact the Integrity Support Line (1–800–587–2712).

Integrity from MARVIN Windows and Doors

ALL ULTREX GLIDER

ELEVATIONS – All ULTREX GLIDER UNITS Not To Scale

Mas. Opg.	2–6 (762)	3–0 (914)	3–6 (1067)	4–0 (1219)	4–6 (1372)	5–0 (1524)	6–0 (1829)
Rgh. Opg.	2–6 (762)	3–0 (914)	3–6 (1067)	4–0 (1219)	4–6 (1372)	5–0 (1524)	6–0 (1829)
Frame Size	2–5 1/2 (749)	2–11 1/2 (902)	3–5 1/2 (1054)	3–11 1/2 (1207)	4–5 1/2 (1359)	4–11 1/2 (1511)	5–11 1/2 (1816)

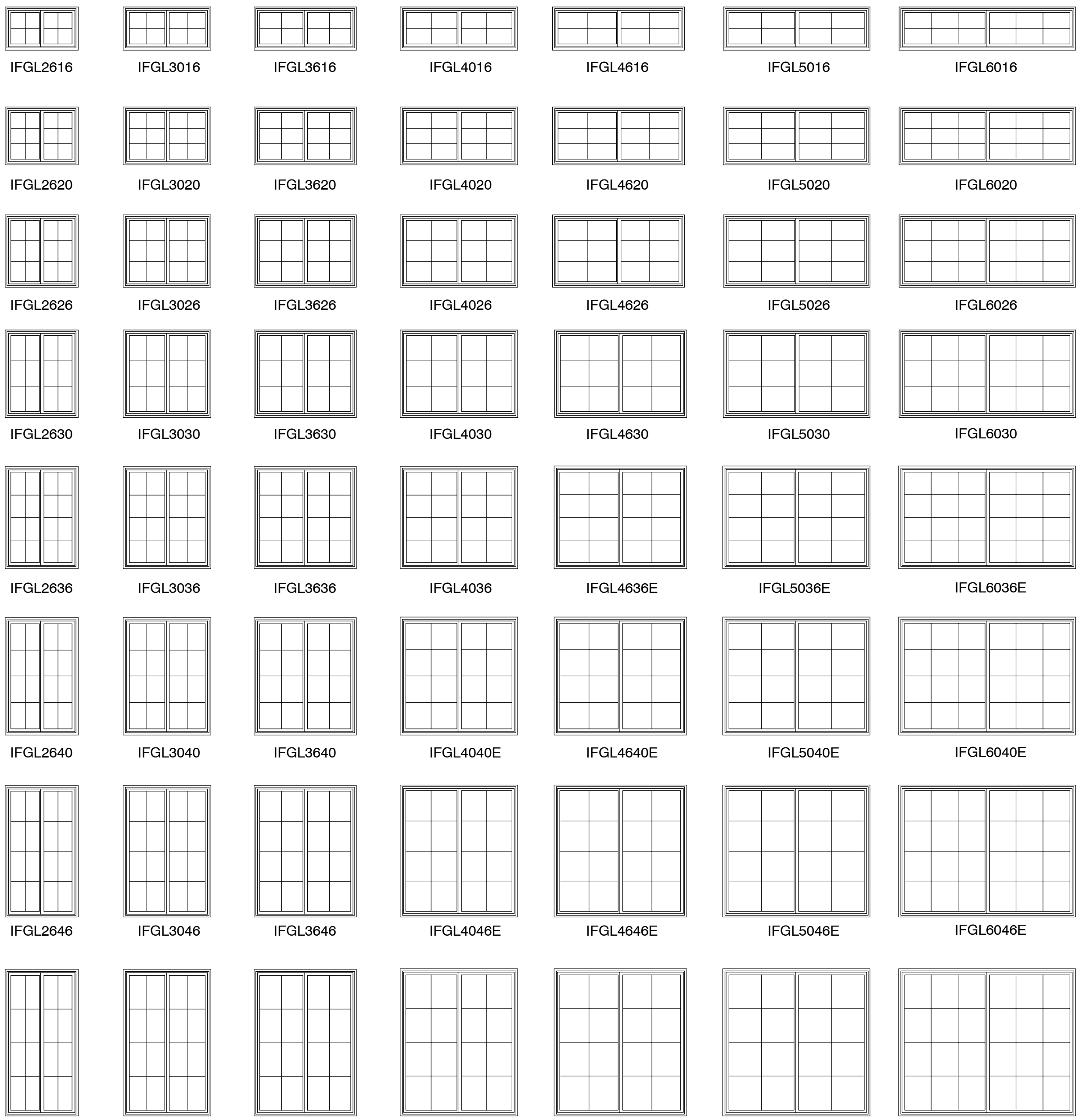

Mas. Opg. / Rgh. Opg. / Frame Size							
1–5 3/4 (451) / 1–6 (457) / 1–5 1/2 (445)	IFGL2616	IFGL3016	IFGL3616	IFGL4016	IFGL4616	IFGL5016	IFGL6016
1–11 3/4 (603) / 2–0 (610) / 1–11 1/2 (597)	IFGL2620	IFGL3020	IFGL3620	IFGL4020	IFGL4620	IFGL5020	IFGL6020
2–5 3/4 (756) / 2–6 (762) / 2–5 1/2 (749)	IFGL2626	IFGL3026	IFGL3626	IFGL4026	IFGL4626	IFGL5026	IFGL6026
2–11 3/4 (908) / 3–0 (914) / 2–11 1/2 (902)	IFGL2630	IFGL3030	IFGL3630	IFGL4030	IFGL4630	IFGL5030	IFGL6030
3–5 3/4 (1060) / 3–6 (1067) / 3–5 1/2 (1054)	IFGL2636	IFGL3036	IFGL3636	IFGL4036	IFGL4636E	IFGL5036E	IFGL6036E
3–11 3/4 (1213) / 4–0 (1219) / 3–11 1/2 (1207)	IFGL2640	IFGL3040	IFGL3640	IFGL4040E	IFGL4640E	IFGL5040E	IFGL6040E
4–5 3/4 (1365) / 4–6 (1372) / 4–5 1/2 (1359)	IFGL2646	IFGL3046	IFGL3646	IFGL4046E	IFGL4646E	IFGL5046E	IFGL6046E
4–11 3/4 (1518) / 5–0 (1524) / 4–11 1/2 (1511)	IFGL2650	IFGL3050	IFGL3650	IFGL4050E	IFGL4650E	IFGL5050E	IFGL6050E

Mas. Opg.
Rgh. Opg.
Frame Size

OPERATION

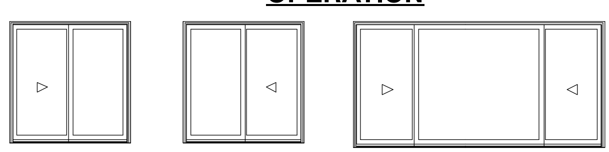

XO, OX or XOX operating units available.
All units viewed from exterior.
O = Stationary Sash
X = Operating Sash

NOTE:
E= These windows meet National Egress Codes for fire evacuation. Local codes may differ.

Standard GBGs patterns shown in above units. Optional: Customer specified equal lite cut patterns are available. Units are available with or without GBGs.

Imperial and metric dimensions are shown. Metric dimensions are in millimeters.

All units viewed from exterior.

ALL ULTREX GLIDER

ELEVATIONS – All ULTREX GLIDER TRIPLE SASH UNITS Not To Scale

Mas. Opg.	6–0 (1829)	7–0 (2134)	8–0 (2438)
Rgh. Opg.	6–0 (1829)	7–0 (2134)	8–0 (2438)
Frame Size	5–11 1/2 (1816)	6–11 1/2 (2121)	7–11 1/2 (2426)

Mas. Opg. / Rgh. Opg. / Frame Size			
1–5 3/4 (451) 1–6 (457) 1–5 1/2 (445)	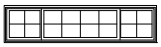 IFGLTS 6016	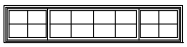 IFGLTS 7016	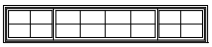 IFGLTS 8016
1–11 3/4 (603) 2–0 (610) 1–11 1/2 (597)	 IFGLTS 6020	 IFGLTS 7020	 IFGLTS 8020
2–5 3/4 (756) 2–6 (762) 2–5 1/2 (749)	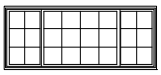 IFGLTS 6026	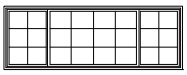 IFGLTS 7026	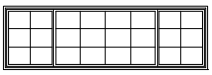 IFGLTS 8026
2–11 3/4 (908) 3–0 (914) 2–11 1/2 (902)	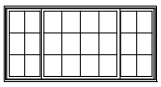 IFGLTS 6030	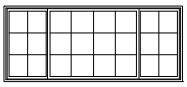 IFGLTS 7030	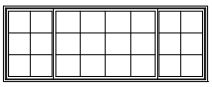 IFGLTS 8030
3–5 3/4 (1060) 3–6 (1067) 3–5 1/2 (1054)	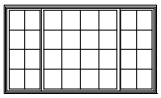 IFGLTS 6036	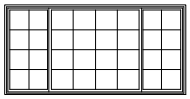 IFGLTS 7036	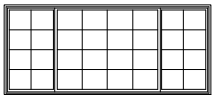 IFGLTS 8036
3–11 3/4 (1213) 4–0 (1219) 3–11 1/2 (1207)	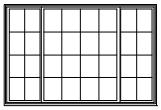 IFGLTS 6040	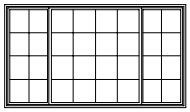 IFGLTS 7040	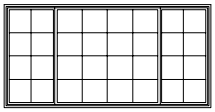 IFGLTS 8040E
4–5 3/4 (1365) 4–6 (1372) 4–5 1/2 (1359)	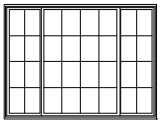 IFGLTS 6046	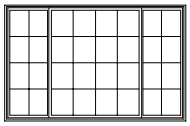 IFGLTS 7046	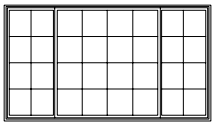 IFGLTS 8046E
4–11 3/4 (1518) 5–0 (1524) 4–11 1/2 (1511)	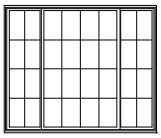 IFGLTS 6050	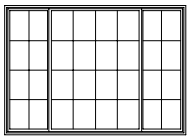 IFGLTS 7050	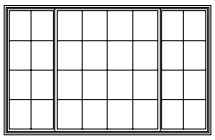 IFGLTS 8050E

NOTE:
E = These windows meet National Egress Codes for fire evacuation. Local codes may differ.

Standard GBGs patterns shown in above units. Optional: Customer specified equal lite cut patterns are available. Units are available with or without GBGs.

Imperial and metric dimensions are shown. Metric dimensions are in millimeters.

All units viewed from exterior.

ALL ULTREX GLIDER

SECTION DETAILS SCALE: 3″ = 1′0″

OPERATING – 2″

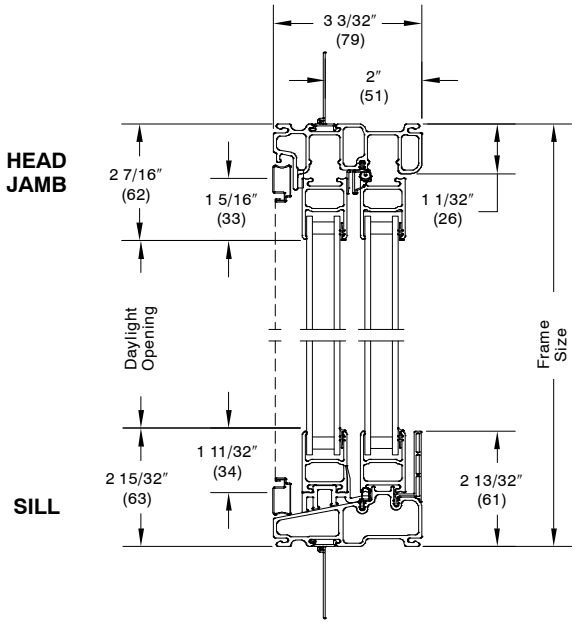

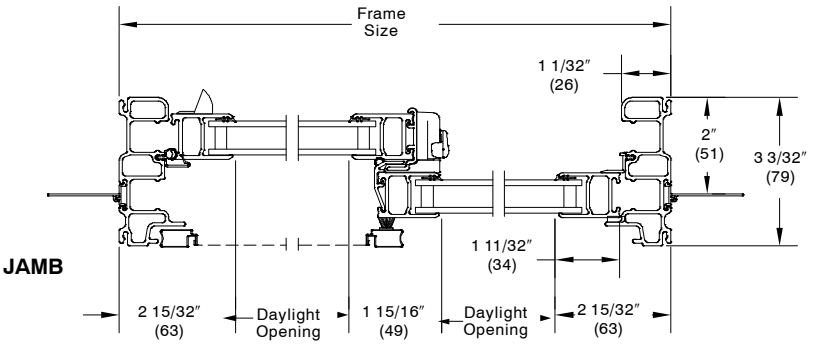

OPERATING – 6 9/16″

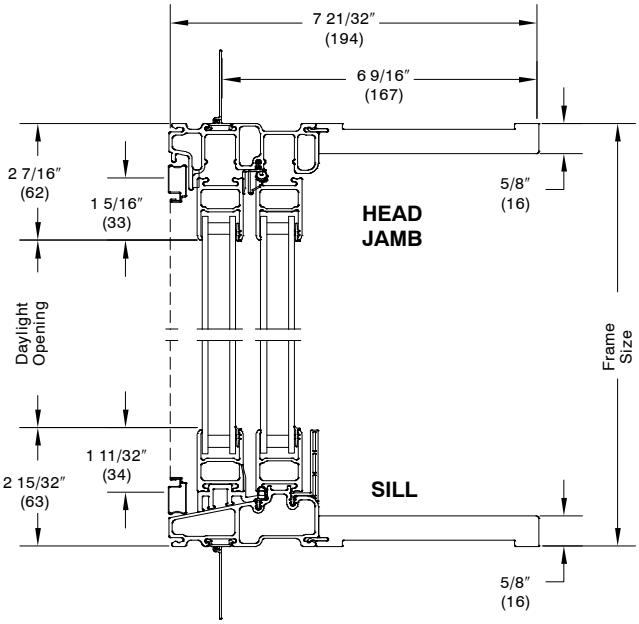

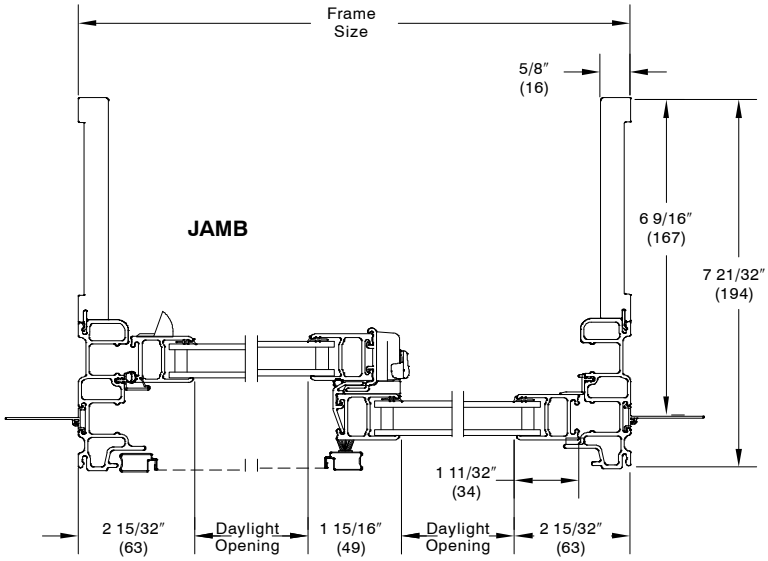

ALL ULTREX GLIDER

SECTION DETAILS SCALE: 3″ = 1′0″

TRIPLE SASH – 2″

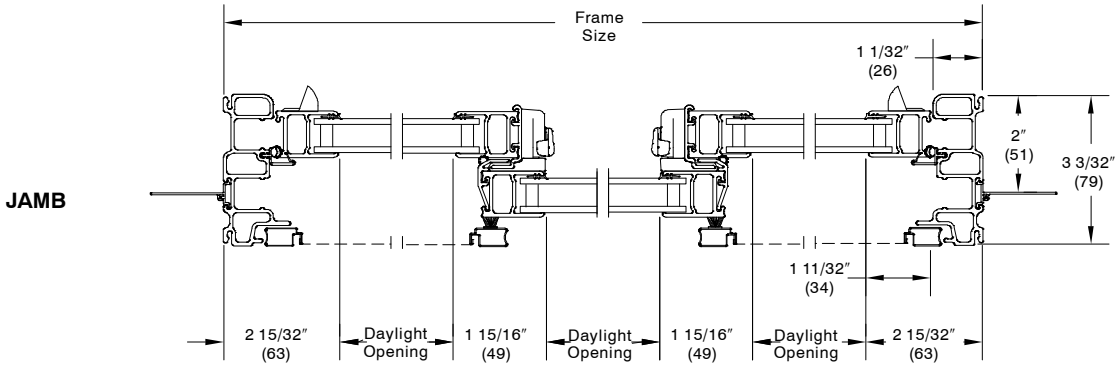

TRIPLE SASH – 6 9/16″

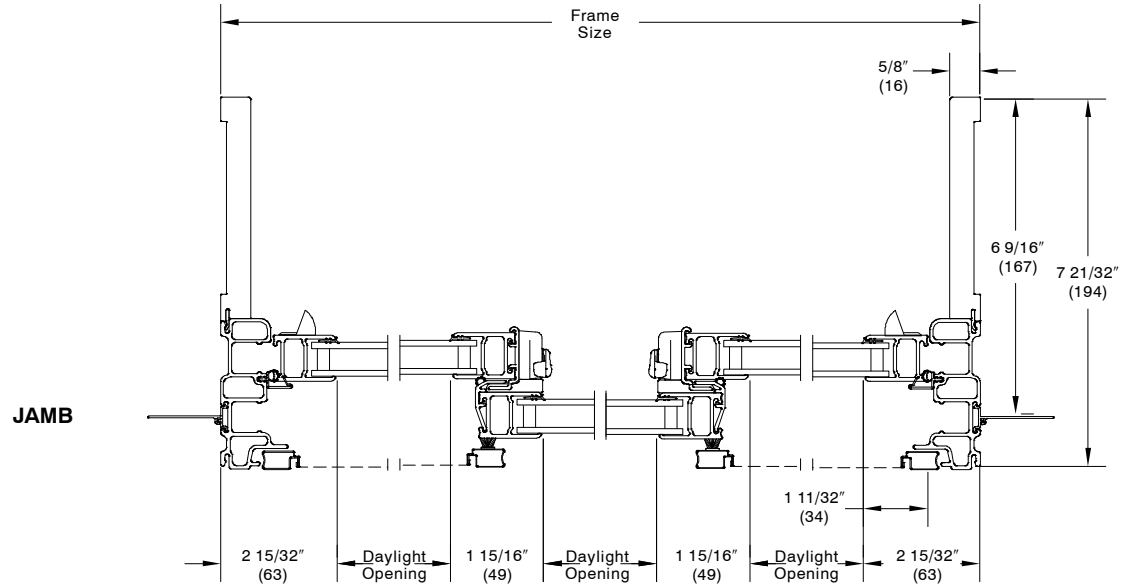

NOTE:
Units also available with 4 9/16″ jamb. Same jamb extension profile as 6 9/16″ jamb extension shown.

MULLIONS

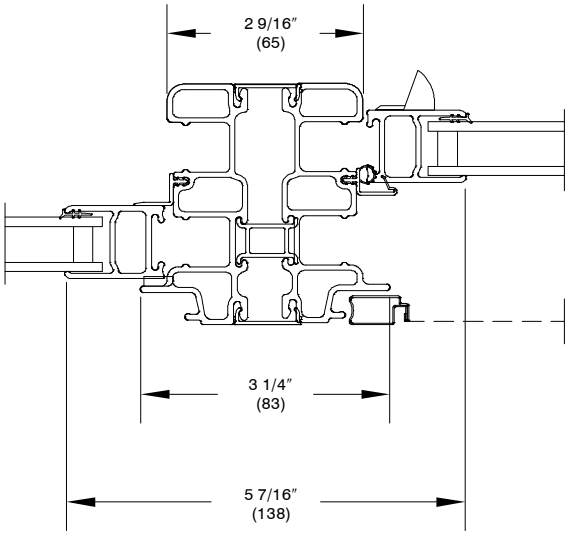

VERTICAL GLIDER UNIT
2 WIDE – OX, XO

DIVIDED LITE OPTIONS

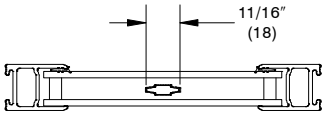

ALUMINUM GRILLE BETWEEN GLASS

All Ultrex Glider Operators

GBGs are available in standard rectangular lite cuts, optional 2W2H lite pattern, or 9–lite Prairie cuts.

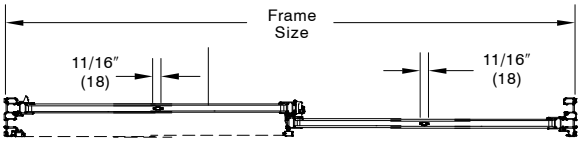

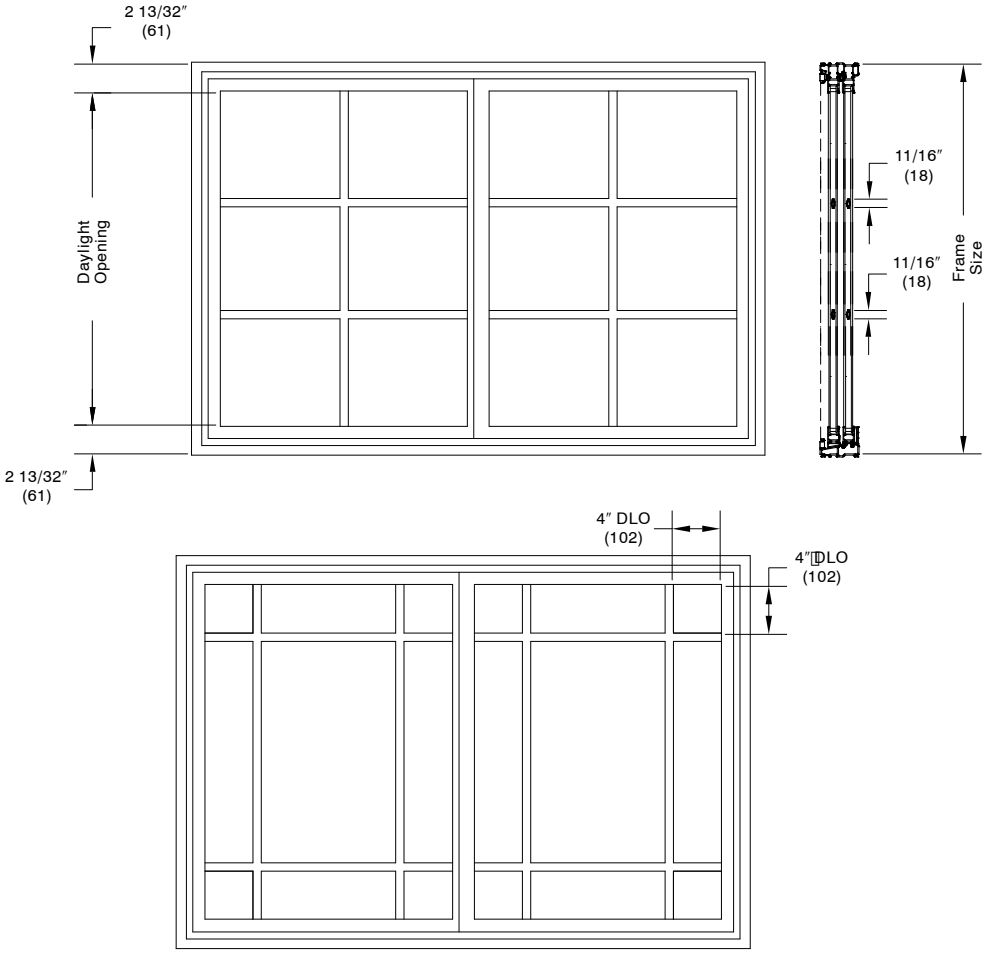

Conversion Formula:

$$\frac{\text{Total DLO} - \text{Total bar width}}{\text{Number of lites}} = \text{Individual DLO}$$

NOTE:
GBGs, rectangle lite pattern, or optional 9 lite Prairie cut within size limitations.

ALL ULTREX GLIDER

INSTALLATION SUGGESTIONS Scale 3″ = 1′ 0″

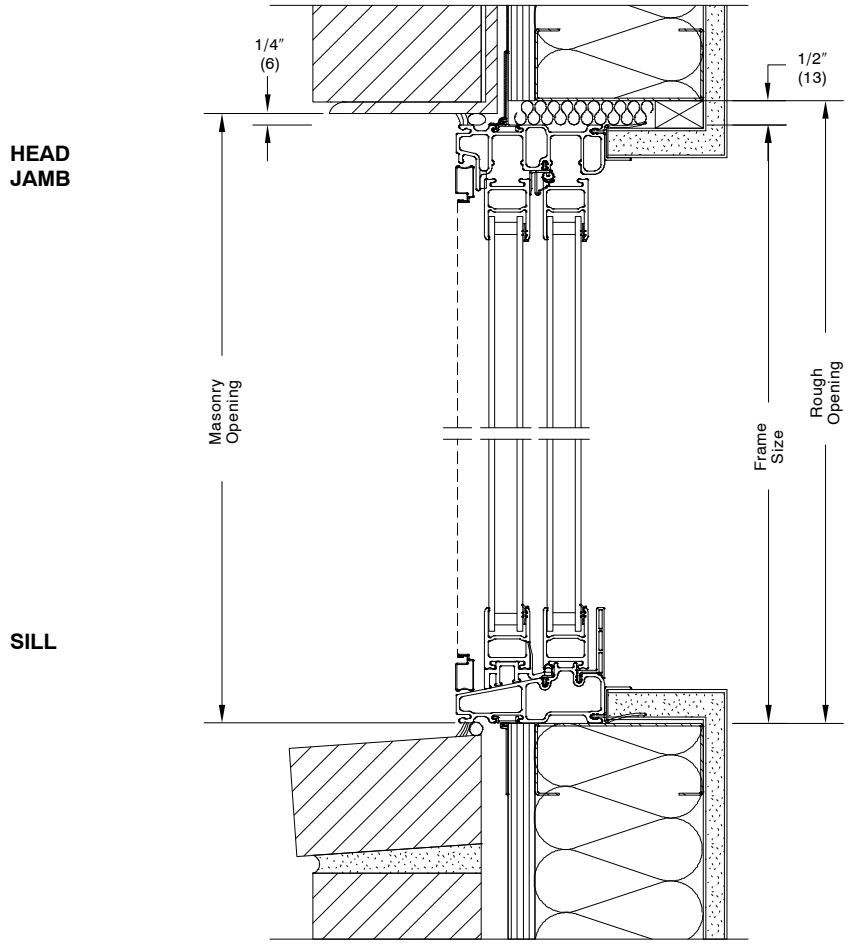

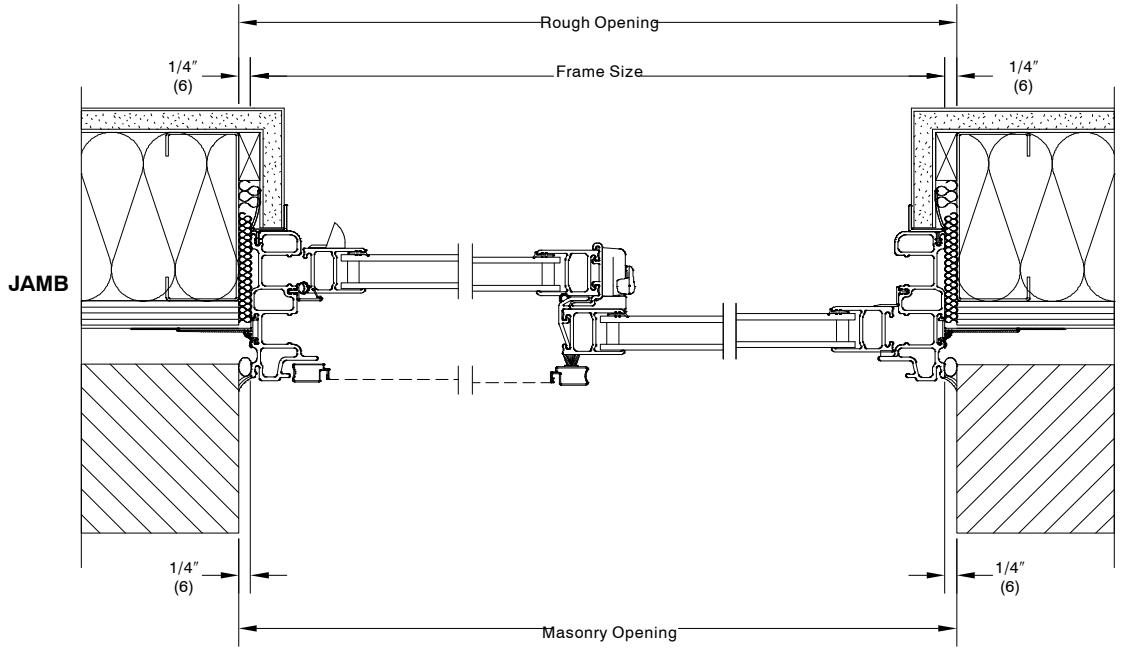

BRICK VENEER WITH STEEL FRAME CONSTRUCTION

NOTE:
Shown with optional sheetrock return.
The above wall sections represent typical wall conditions, these details are not intended as installation instructions. Please refer to the installation instructions provided with the purchased units.

ALL ULTREX GLIDER

INSTALLATION SUGGESTIONS Scale 3″ = 1′ 0″

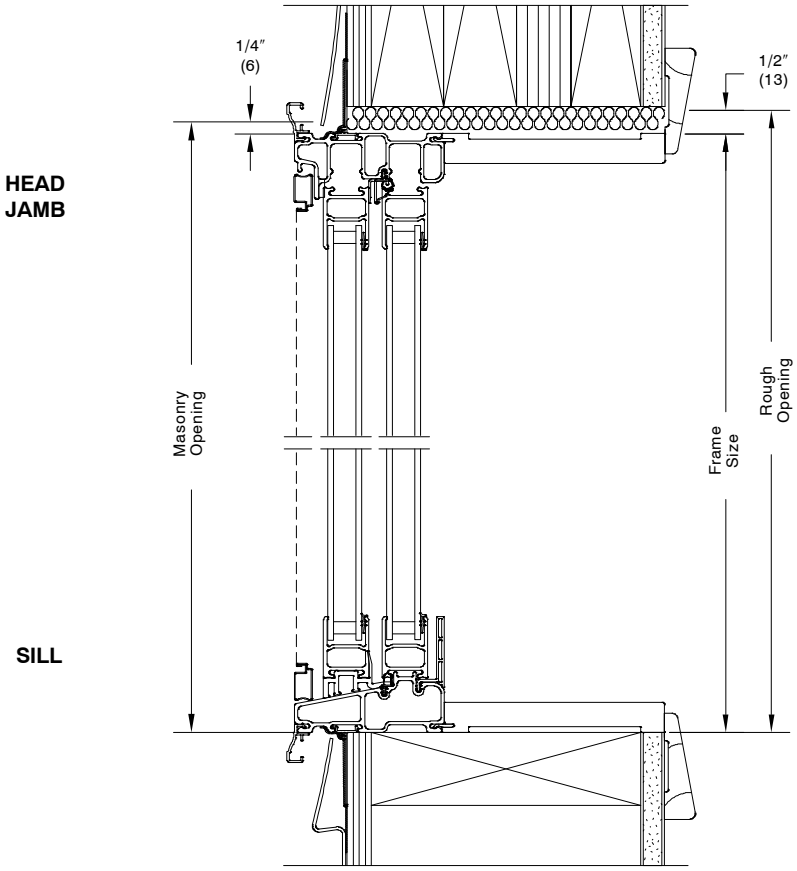

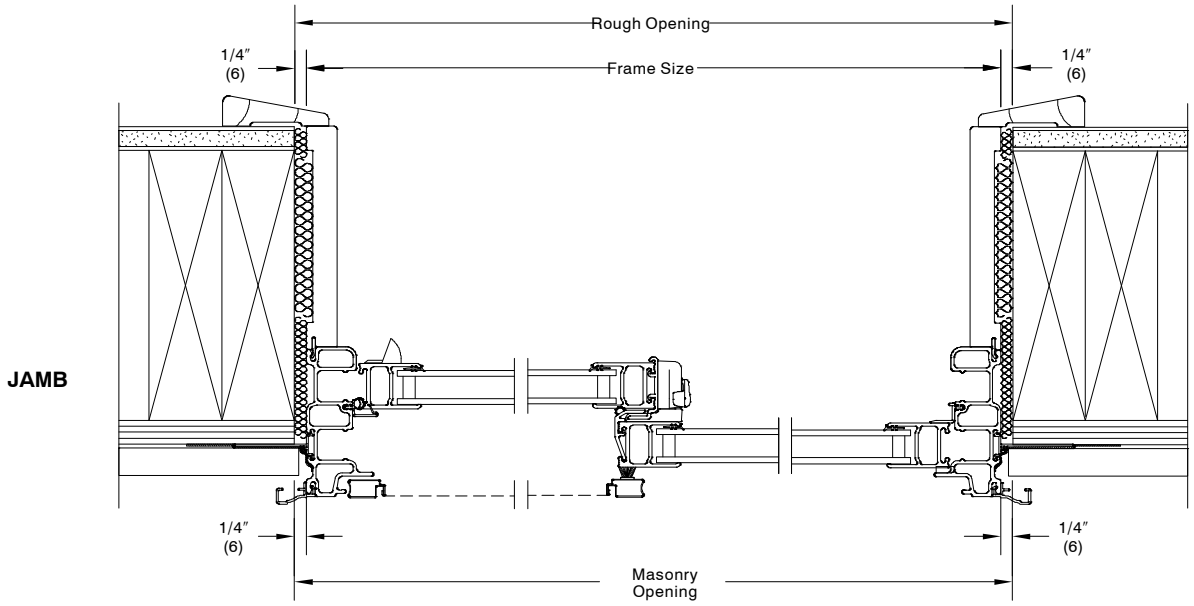

VINYL SIDING WITH 2X6 FRAME CONSTRUCTION

NOTE:
Shown with optional jamb extension and J–channels.
The above wall sections represent typical wall conditions, these details are not intended as installation instructions.
Please refer to the installation instructions provided with the purchased units.

ALL ULTREX GLIDER

INSTALLATION SUGGESTIONS Scale 3″ = 1′ 0″

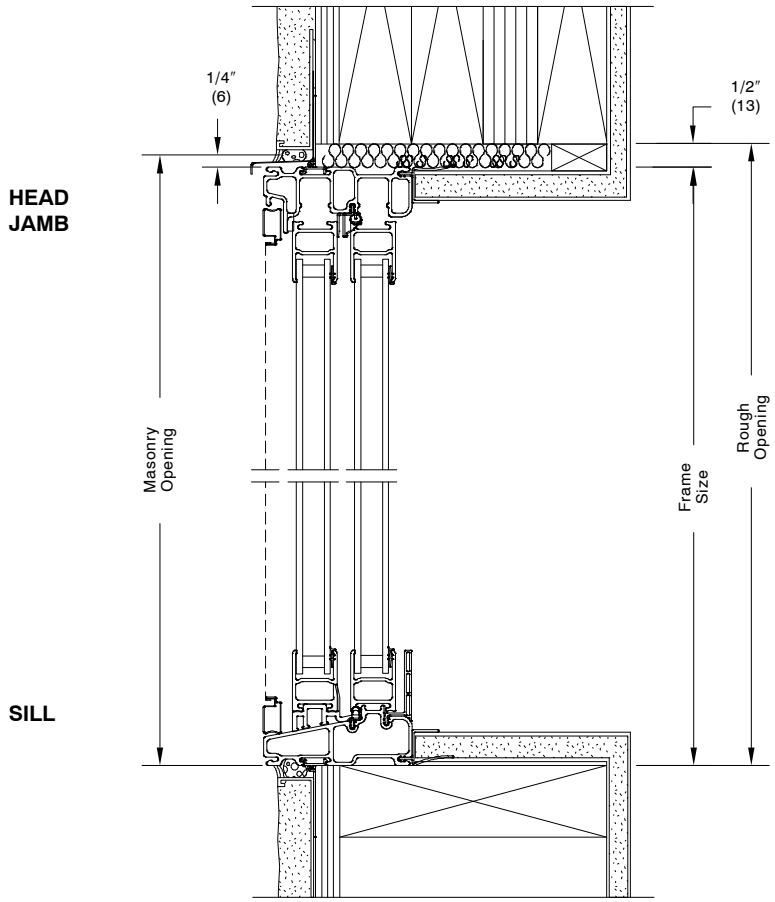

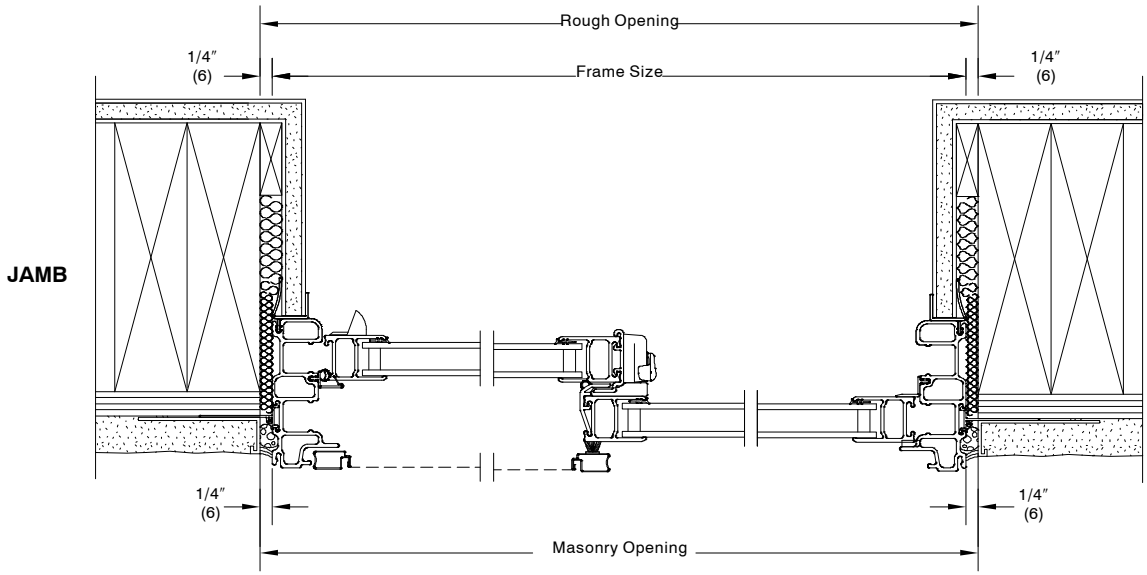

STUCCO WITH 2X6 FRAME CONSTRUCTION

NOTE:
Shown with optional sheetrock return.
The above wall sections represent typical wall conditions, these details are not intended as installation instructions.
Please refer to the installation instructions provided with the purchased units.