All Ultrex® Series Window Installation

New Wood Frame Construction

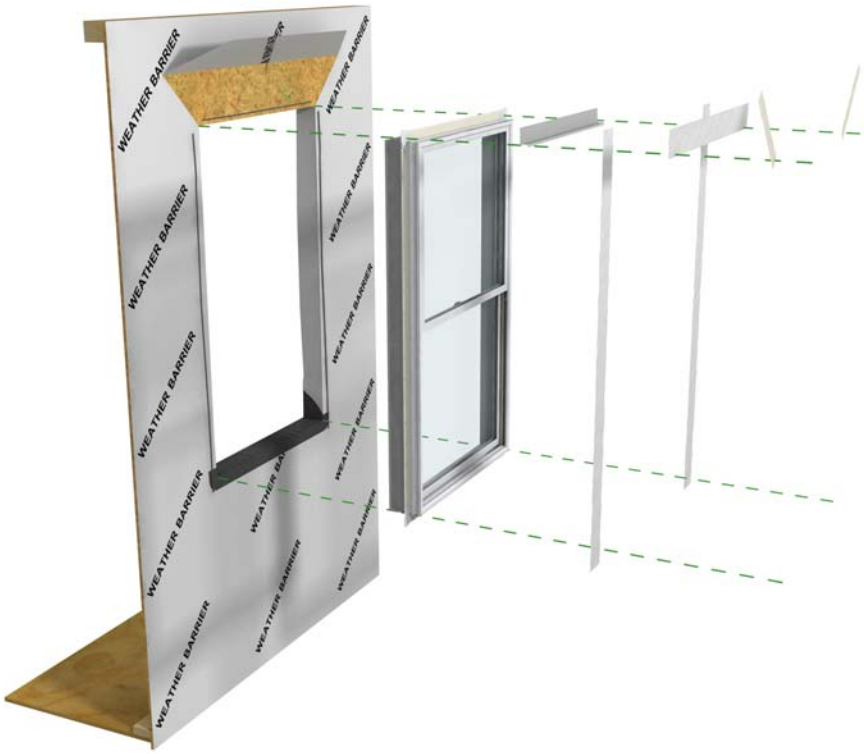

These instructions are applicable for the following products:

Casement Family	**Round Tops**
Double Hung Family	**Round Tops by Marvin**
Glider	**Polygon**

ABSTRACT: Please read these instructions in their entirety before beginning to install your Integrity window product. These installation instructions demonstrate the installation of All Ultrex Integrity windows in new wood frame construction using an industry approved water management system. For installation using other construction methods, such as remodeling, replacement, and recessed openings refer to “ASTM E2112-01, Standard Practice for Installation of Exterior Windows, Doors and Skylights,” for installation suggestions. Information for ASTM E2112 can be found on the ASTM website, www.astm.org.

For product specific issues, service instructions and other field service guides, refer to the Integrity Service Manual, visit our website at www.integritywindows.com, or contact your Integrity representative.

Regional standard practices, environmental conditions, and codes may vary and supersede the procedures contained within. The responsibility for compliance is yours: the installer, inspector, and owner(s).

The procedures within these instructions are consistent with those used in testing to achieve the advertised DP rating.

Integrity from MARVIN
Windows and Doors
All Ultrex® Series

2013-01-31
19970123

Table of Contents

Before You Begin 2
Installer and Builder Information 2
After Market Products 2
Hazard Notations 3
Step 1: Rough and Masonry Opening Requirements 4
Step 2: Rough Opening Preparation 5
Step 3: Preparing the Unit for Installation 6
Step 4: Installing the Window 7
Step 5: Flashing the Installation - Air Barrier Applications 9
Technical Installation Specifications 11

Before You Begin

Installer and Builder Information

- Always provide a copy of these instructions for the current or future building owner.
- Plan sizing of rough opening and clearance from exterior finishing systems to allow for normal materials shrinkage or shifting (e.g. wood structure with brick veneer; allow adequate clearance at sill). Failure to do so can void the Integrity warranty coverage.
- Refer to the Technical Installation Specifications section for technical specifications regarding the installation of this product. These installation requirements as well as the details in this section must be followed to achieve the advertised design pressure (DP) rating of this product.
- It is the responsibility of the builder, installer and subcontractors to protect the interior and exterior of windows or doors from harsh chemical washes, construction material contamination and moisture. Damage to glazing, hardware, weather strip and cladding/wood can occur. Protect with painters tape and/or protective sheathing as required. Follow all guidelines regarding material use, preparation, personal safety and disposal.
- Contact your Integrity supplier if you have any questions regarding product and materials used in manufacturing or questions on replacement parts.

After Market Products

Alterations to Integrity products including window films, insulating or reflective interior window treatments or additional glazings can cause excessive heat buildup and/or condensation. They may lead to premature failures not covered under warranty by Integrity Windows and Doors.

Before purchasing or applying any product that may affect the installation or performance of Integrity windows contact the manufacturer of aftermarket product/glazings that are not supplied by Integrity and request written product use, associated warranties and damage coverage. Provide this information and warranties to the end user and/or building owner for future reference.

Hazard Notations

Please familiarize yourself with the following hazard notations used throughout this instruction.

Caution	Warning	Seek Assistance	Tips/Hints	IZ3
Mistakes or misuse could cause damage to the window or result in faulty installation and unit performance.	Mistakes or misuse could result in personal injury and/ or severe damage to unit, equipment, and/or structure.	Help from another individual is necessary to perform this task safely and correctly.	Information on alternative procedures, definitions, helpful hints	Indicates fastening requirements for Impact units.

You Will Need to Supply	
Safety glasses	Hearing protection
Level	Square
Hammer	Wood shims
2" Roofing nails	Insulation
Tape measure	Perimeter sealant
Sill pan flashing	Drip cap
Backing material (foam backing rod)	

Standard Parts Shipped

Units are sent with hardware and four (4) nailing fin corner gaskets. Follow installation instructions included with part if applicable.

NOTE: Numbers listed in parentheses () are metric equivalents in millimeters rounded to the nearest whole number.

NOTE: Depending on the installation method, other material may be needed to properly prepare and seal the installation such as self sealing adhesive flashing, building paper, and seam seal tape, etc.

WARNING

Always practice safety! Wear the appropriate eye, ear and hand protection, especially when working with power tools.

Step 1: Rough and Masonry Opening Requirements

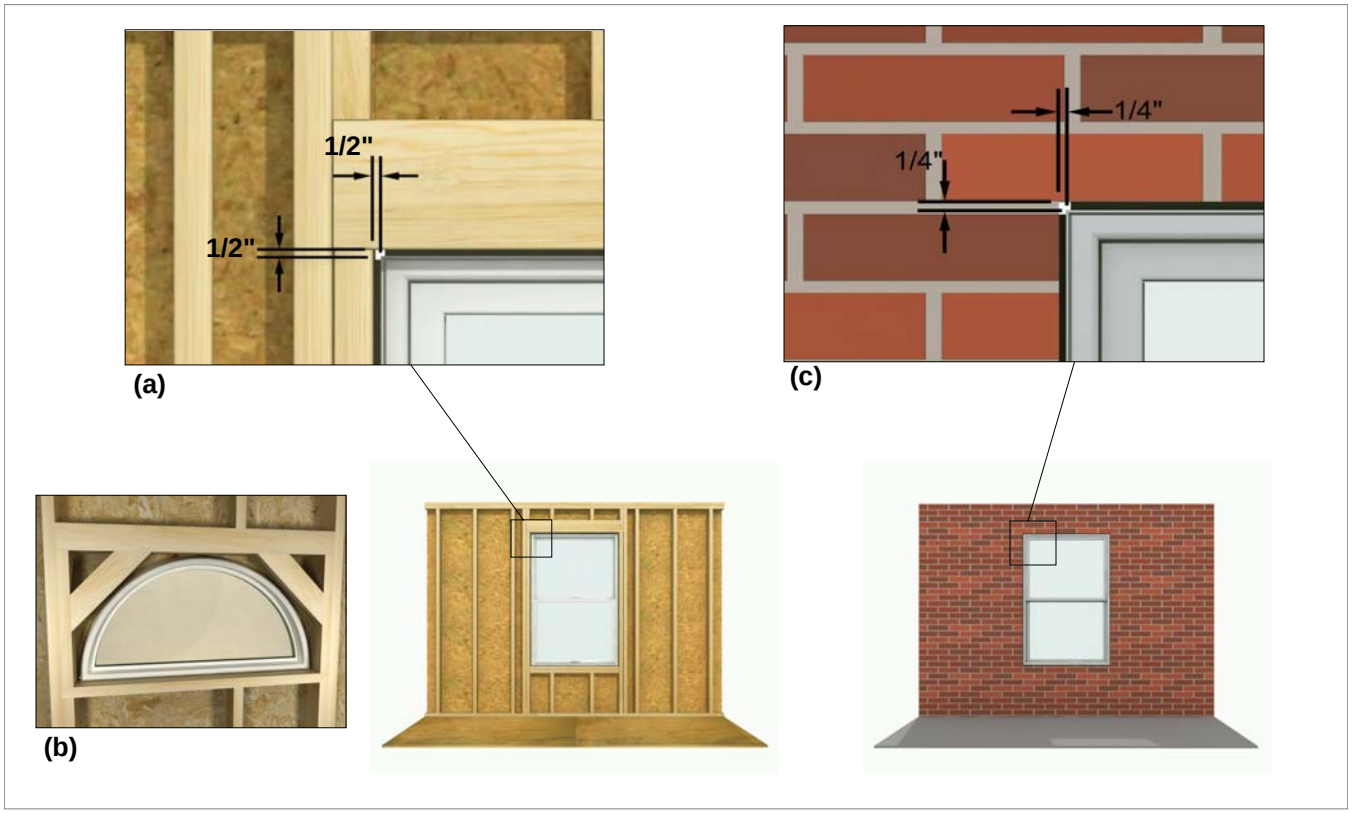

Figure 1 Typical rough opening.

1. ***Rough openings (RO)*** should be a 1" (25) wider than the outside measurement of the frame and a 1/2″(13) higher. (When framing rough opening, care should be taken to ensure the sill plate is level and the opening is square, straight and plumb.) See figure 1a.

2. On shapes such as polygons, round tops, and octagons, make sure there is proper bracing. See figure 1b.

3. ***Masonry openings (MO)*** should be 1/2″ (13) wider than the outside measurement of the frame and casing and 1/4″ (6) higher than the outside measurement of the frame or casing. See figure 1c.

NOTE: When using a sill panning product you may need to adjust the opening accordingly to account for the height of the panning.

CAUTION

If the previous conditions are not met, the installer must take corrective actions to alter the opening(s) before proceeding. It is also essential that the sheathing behind the wall be a solid surface to ensure that the unit can be secured firmly to the wall. Typical masonry opening.

NOTE: On standard wood frame construction with brick veneer, make sure there is at least 1/2″ (13) between bottom of window sill (or eventual placement of the window) and the top row of brick to avoid "brick bind". See figure 2.

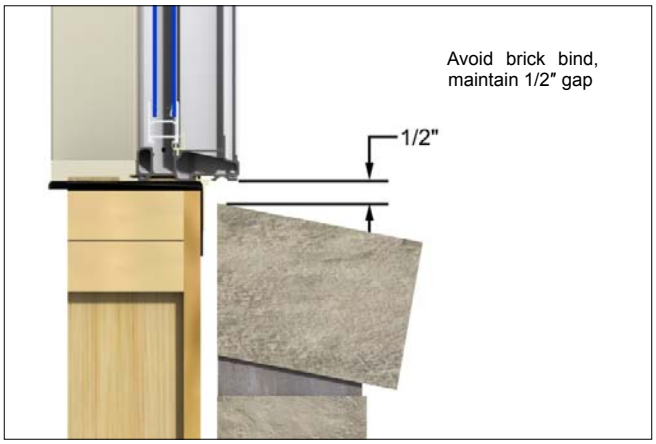

Figure 2

Step 2: Rough Opening Preparation

The method shown below is Method A1 using a TYPE III flash pan. For step by step instructions on how to prepare an opening using this method, refer to www.marvin.com/ROprep for instructions titled "Window Rough Opening Prep and Flashing Method A1-Membrane Drainage System". Refer to ASTM E2112-07 for other rough opening preparations that are more appropriate for your situation.

Figure 3

Step 3: Preparing the Unit for Installation

1. Remove the protective packaging from the unit and dispose/recycle properly. Inspect unit for any hidden damage and report immediately to your Integrity representative. Provide the customer service number etched on one of the top corners of the glass. See figure 4.

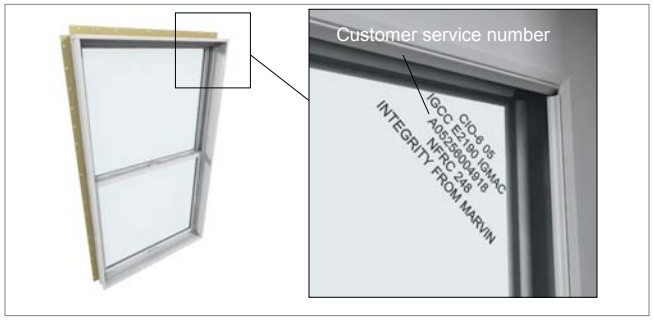

Figure 4 Etching on glass contains customer service number.

2. Position the factory applied nailing fin in the upright position. DO NOT APPLY NAILING FIN CORNER GASKETS AT THIS TIME.

3. If you are installing a window with installation brackets apply a 3/16" diameter 1 1/2" long bead of heavy duty construction adhesive in the exterior jamb channel. The sealant is to be placed 6" in from each corner and spaced 12" apart along the perimeter of the unit. See figure 5. Press the installation bracket firmly into place over the sealant and secure with the two provided screws. See figure 5.

4. When installing factory mulled units apply structural brackets on both sides of all mullion joints. See figure 5.

5. Install jamb extension before installing the window in the rough or masonry opening. Follow instructions provided with the jamb extension.

Tip

Keep the window locked until square and fastened in the opening.

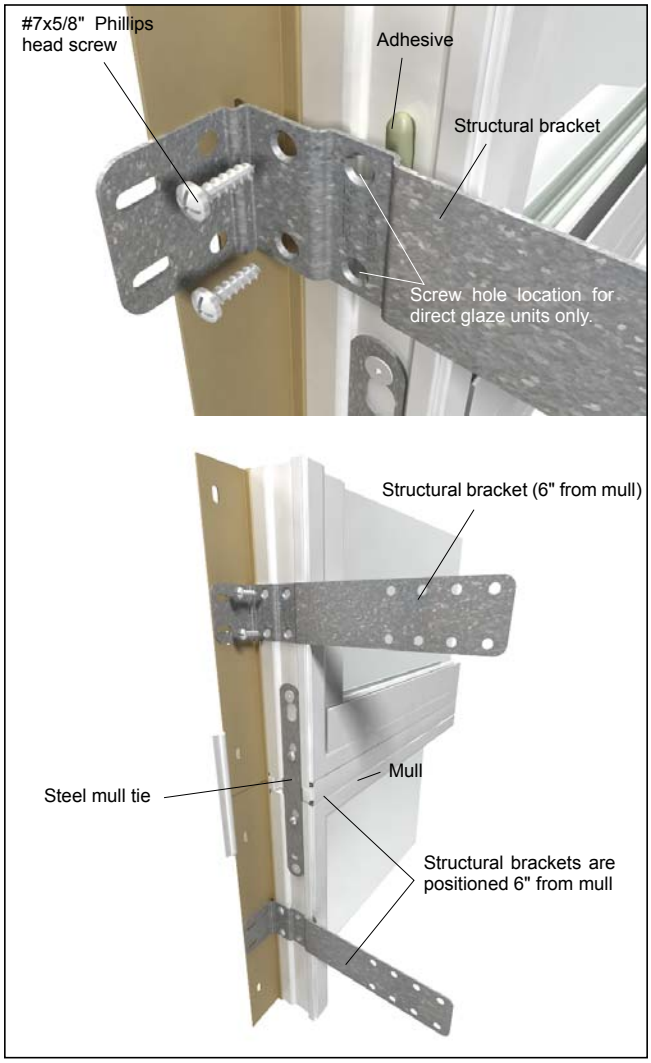

Figure 5

Step 4: Installing the Window

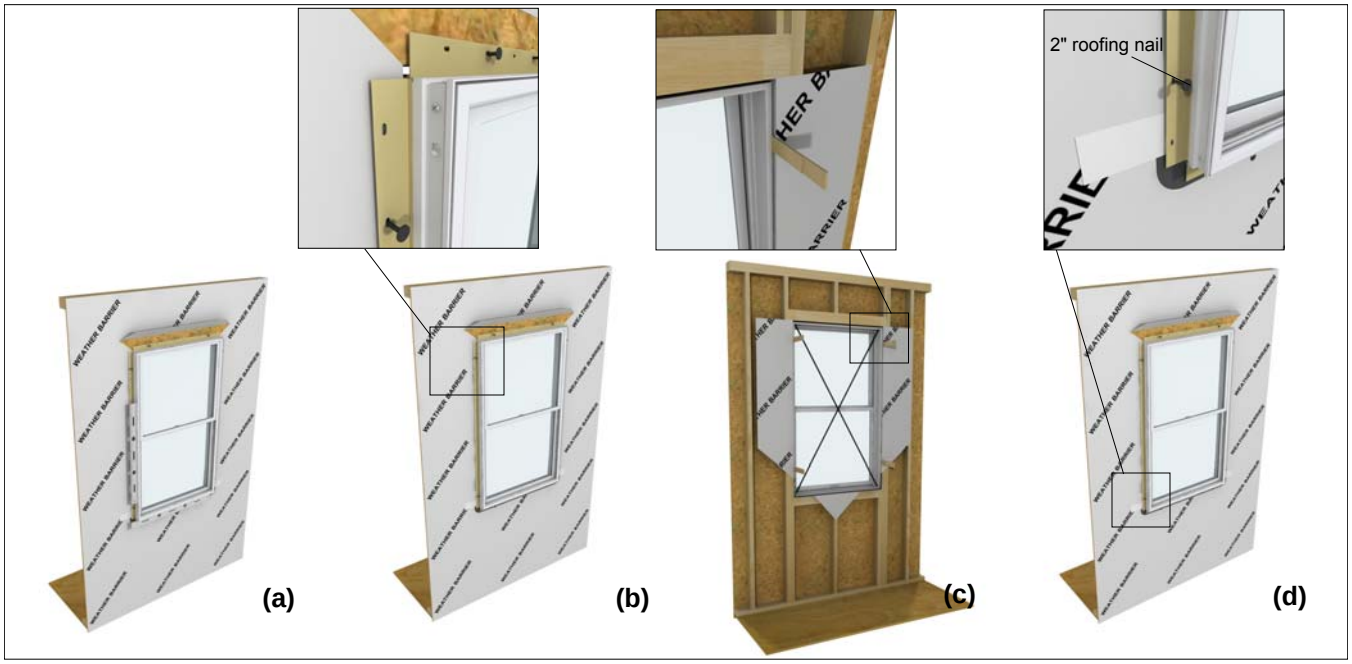

Figure 6 Positioning the window in the opening.

Seek Assistance

Some large windows and/or assemblies are very heavy. Avoid injury by getting help to lift and position the window into the rough opening.

1. Center the window in the opening. Level at the sill and plumb the frame (interior/exterior). Shim under the jambs to bring to level if necessary. See figure 6a.

2. Once level, tack the jambs with 2″ (51) roofing nails within 6" (152) from the head jamb (or fasten top brackets). If applicable, follow instructions sent with the brackets. See figure 6b.

CAUTION

Do not screw or nail through the Ultrex frame. Damage will occur and may void your warranty.

3. From the interior, square the frame in the opening by installing shims between the jambs and framing 4"-6" (102-152) from the head jamb and sill. Measure the diagonals and adjust shims until the unit is square in the opening. See figure 6c.

4. Now tack the lower corners of the nailing fin and recheck for square. If necessary, remove the nails and adjust shims until the unit is square. See figure 6d.

5. Shim 4"-6" (102-152) from the bottom corners.

CAUTION

Proper shimming is extremely important. Under-shimming or over-shimming will result in bowed jambs and or head jamb. Both conditions can contribute to improper window operation.

ATTENTION

For units installed with masonry clips or installation brackets. Bend bracket around framing member and attach with the #8 x 1 1/4″ screws. Angle screws approximately 15 degrees away from the window. Always shim above or below brackets. See figure 7.

Figure 7 Attaching window with structural brackets.

NOTE: Depending on construction method or wall type, you may need to modify the clip/bracket to fit the opening. Fastening holes should be no more than 1/4" from the bend in the bracket. If necessary, drill two 5/32" (3) *holes in the bracket.*

Step 4: Installing the Window (cont.)

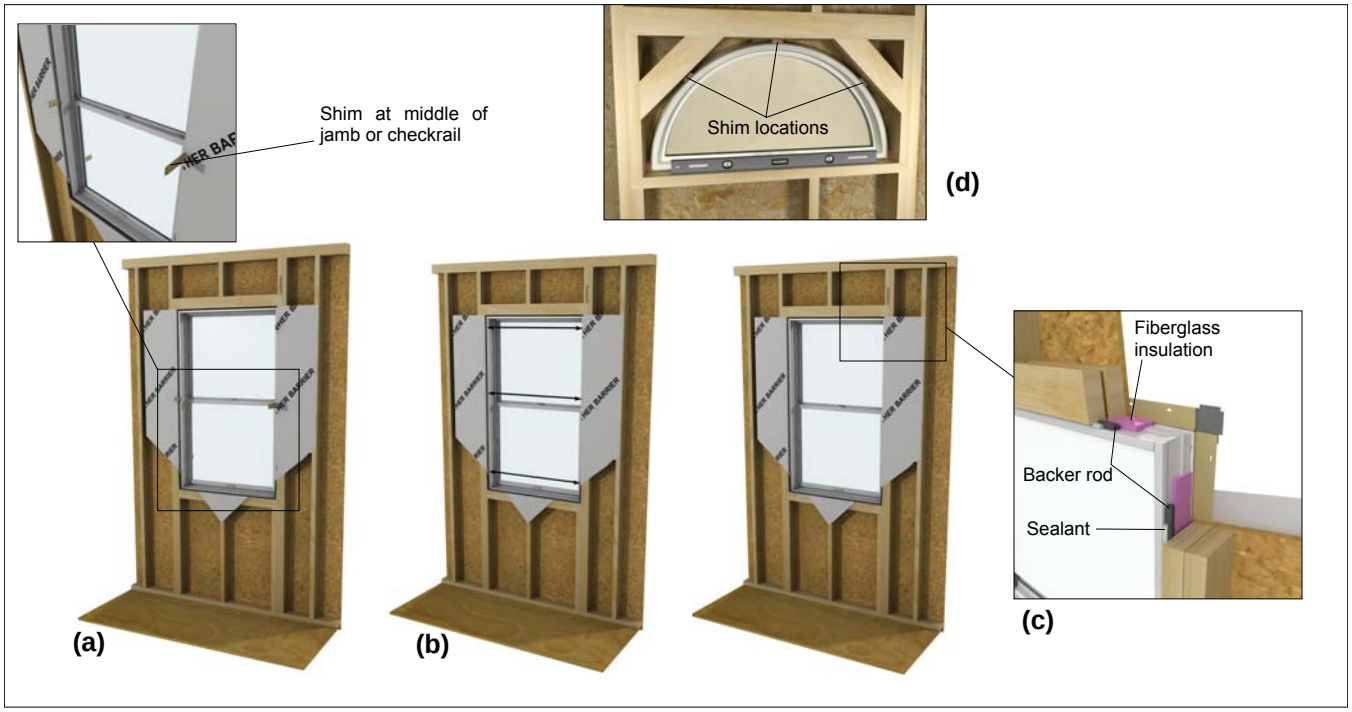

Figure 8 Shimming and squaring the window.

6. Recheck the diagonals one more time to make sure the unit is square in the opening. If square install additional shims at 15" intervals on center and at each lock point. Always shim at checkrails and meeting stiles. See figure 8a.

7. On round tops and other non-rectangular shapes, make sure to shim at bracing locations. See figure 8d.

8. Measure at head jamb, center of unit, and sill to make sure all dimensions are equal. If they are not, you will have to adjust the shims accordingly. See figure 8b.

9. Once the unit is square and plumb in the opening, operate the sash (on operable units) to make sure it is operating properly. If not, you may have to make some adjustments to the shims.

Tip

On operating units, one way to make sure that the unit is installed square is to check the reveal (gap) between the operating sash and the frame. An even reveal around the entire sash generally means a squarely installed unit and will ensure smooth operation.

10. Complete fastening of the nailing fin around the perimeter of the unit with 2" roofing nails 6" (152) from each corner and spaced every 6"-8" (152-203) on center (or fasten remaining structural brackets).

CAUTION

Some building codes require foam type insulation to form an infiltration seal. Use only low expansion type foam in combination with fiberglass insulation. Foam and foam application must conform to ASTM E2112-01, sec. 5.9.2. Follow all instructions and warnings from the foam manufacturer.

11. Insulate loosely around the window with fiberglass insulation.

12. Integrate the unit with the interior air barrier of the structure by inserting backer rod into the RO and applying a continuous bead of sealant around the interior perimeter of the unit. See figure 8c.

Step 5: Flashing the Installation - Air Barrier Applications

Figure 9 Sealing the Installation in air barrier applications.

1. Flash the installation in a weather board fashion. For step by step instructions refer to marvin.com/ROprep for instructions titled "Window Rough Opening Prep and Flashing Method A1-Membrane Drainage System".

Step 6: Final Installation Procedures

1. Install exterior finish or siding per manufacturer's instructions.

2. After exterior finish or siding is installed, apply sealant around the exterior perimeter of the unit frame or casing. As needed, insert backing material between the frame or casing and the structure to provide a proper sealant joint. Sealant depth must be equal to width between unit and exterior finish material (brick and masonry apply). Always refer to the manufacturers' recommendations for proper surface preparation and application. See figure 10.

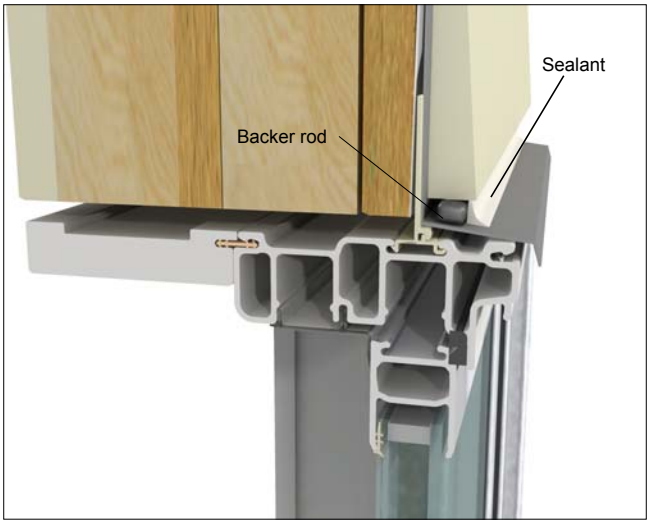

Figure 10 Apply perimeter sealant between window and exterior finish.

CAUTION

Perimeter sealant must be Grade NS Class 25 per ASTM C920 and compatible with the window product and the finished exterior(s) of the building. Using improper sealant could result in sealant failure causing air and water infiltration.

J-Channel Installation

1. For J-Channel installation, refer to the installation instruction included with the J-Channel.

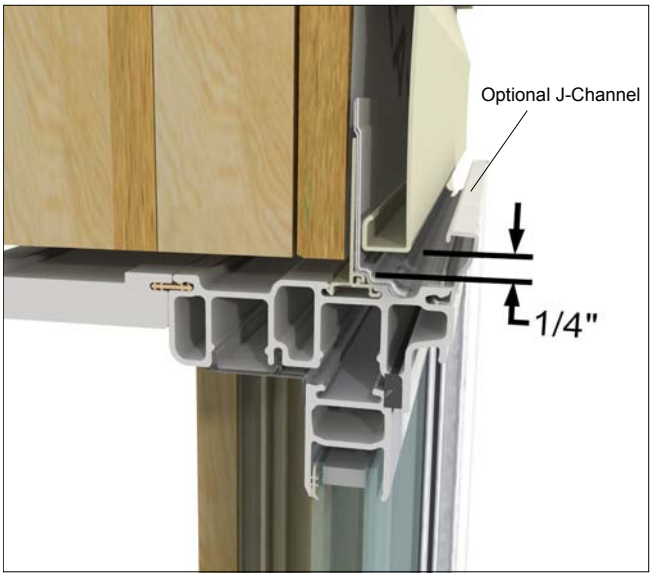

Figure 11 Unit with optional J-Channel applied.

Final Installation Procedures (continued)

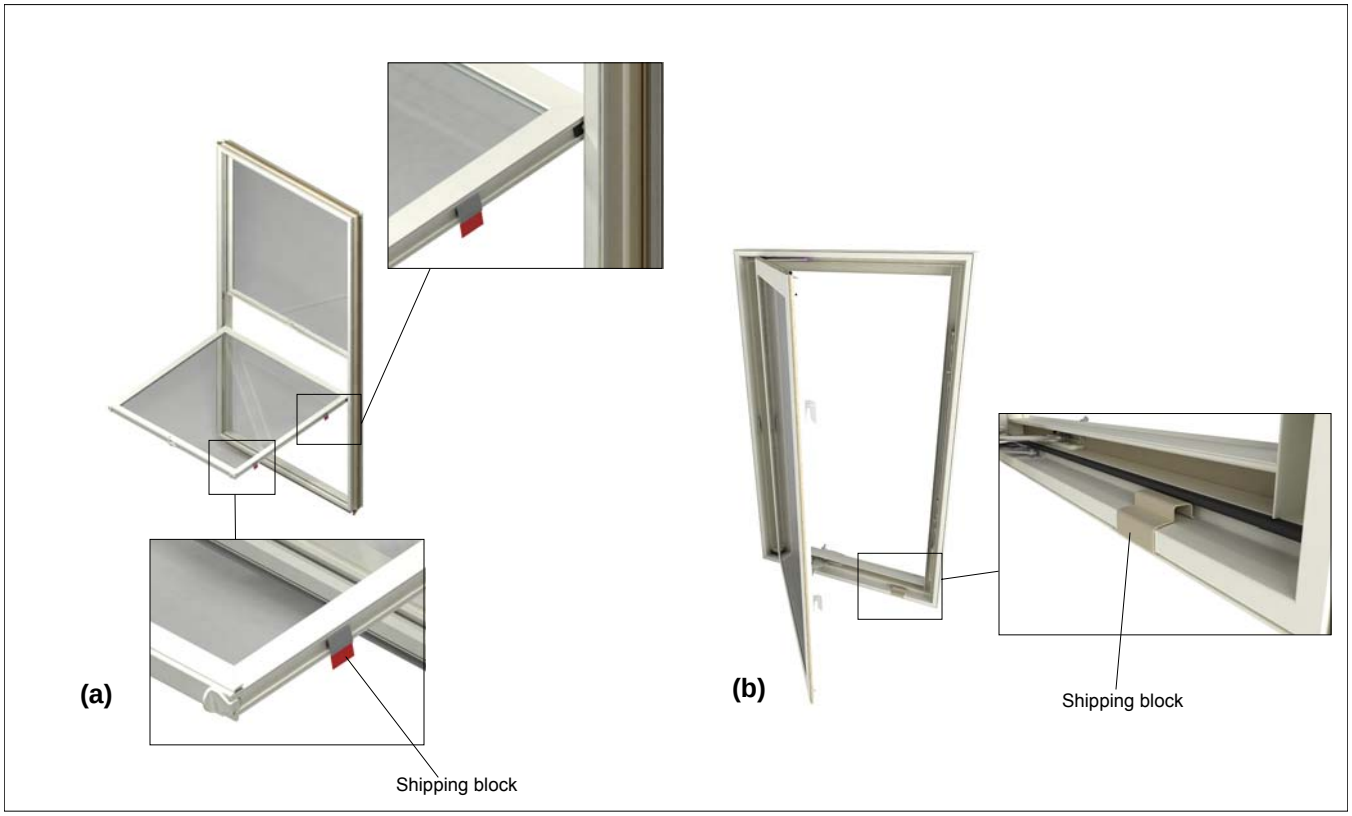

Figure 12

1. On Single and Double Hung units: Raise the bottom sash and tilt in. Remove the vinyl shipping blocks from each side. See figure 12a.

NOTE: Sash must be raised at least 1" (25) *before tilting.*

2. On Casement units: Open the sash and remove the shipping blocks from the frame. See figure 12b.

Technical Installation Specifications

The following details are specified for proper installation and for the unit to meet the advertised design pressure (DP) rating.

- Rough Opening Width: 1/4″-1″ (6-25) wider than window/door frame outside measurement.
- Rough Opening Height: 1/4″-1/2″ (6-13) higher than window/door frame outside measurement.
- Masonry Opening Width: 1/4″-1/2″ (6-13) wider than window/door frame outside measurement.
- Masonry Opening Height: 1/8"-1/4" (3-6) higher than window/door frame outside measurement.

Architectural Detail Manual Specifications:

- Rough Opening: Width 1/2" (13); Height 1/2" (13).
- Masonry Opening: Width 1/2" (13); Height 1/4" (6).

- The panning must drain water to the exterior of the cladding OR the exterior surface of a concealed weather resistive barrier.

CAUTION

Be aware that the use of sill pans and other barriers will decrease the rough opening height clearance. Adjust opening dimensions accordingly.

- The panning system used in these instructions is one component in a structure's overall water management system. It should be used in conjunction with an appropriate drainage plane compatible with the exterior cladding.
- Flashing materials must comply with ASTM E2112-01, section 5.13 and be compatible with all materials used in installation including panning systems, air barriers and building papers, sheathing, and the window unit.
  Flashing material must not contain asphalt and must be compatible with flexible PVC (vinyl).
- Properly flash and/or seal all windows at the exterior perimeter.
- Sealants used for installation must be Grade NS Class 25 per ASTM C920 and compatible with the building exterior, window exterior surface, and flashing/water management materials.
- Optional foams used for installation must be low expansion only. Foam and foam application must comply with ASTM E2112-01, SEC 5.9.2.
- Shim 4″-6″ (102-152) from each corner on jambs and head jambs. Install additional shims at 15″ (381) on center and at all locking points. Always shim at the checkrails and meeting stiles.
- Do not use chemically treated products for shim material.
- Fasten units installed with nailing fin to the sheathing with 2" (51) galvanized roofing nails spaced no more than 4" (102) from each corner and spaced no more than 8" (203) on center around the entire perimeter.
- Fasteners penetrating chemically treated lumber must be a minimum of 0.90 oz/ft^2 zinc hot dipped galvanized or stainless steel type 304 or 316.
- The window frame must not come into direct contact with chemically treated wood products.

WARNING

Drilling, sawing, sanding or machining wood products generates wood dust, a substance known to the State of California to cause cancer. Avoid inhaling wood dust or use a dust mask or other safeguards for personal protection. California Health and Safety Code section 25249.6.

NOTE: The unit was finished with a wood trim to simulate a finished installation during certification testing.