Integrity Double Hung Bay

Assembly and Mulling Instructions

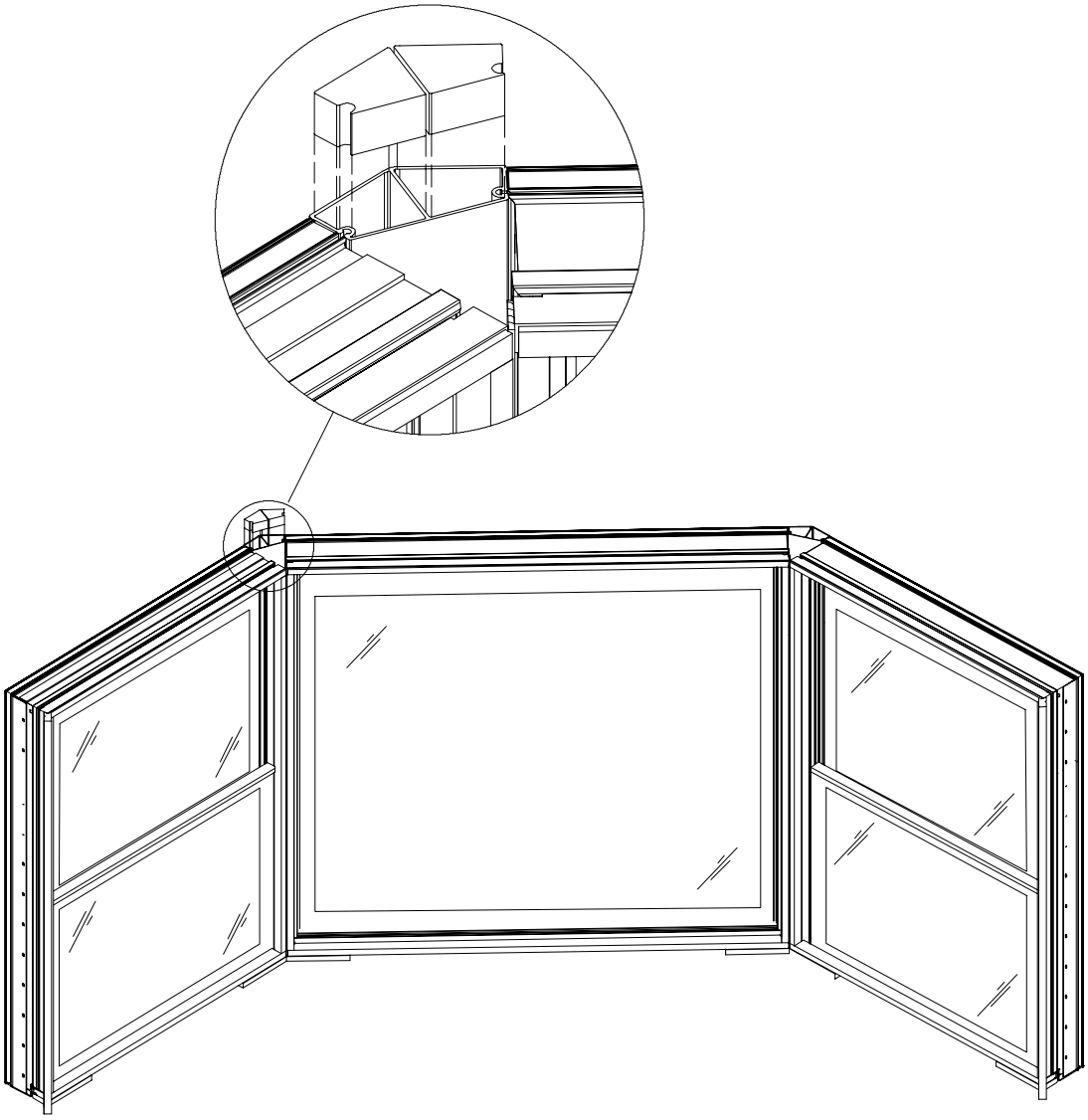

2/5/03
11708511

Integrity from MARVIN Windows and Doors

BEFORE YOU BEGIN

Important! Read these instructions thoroughly before beginning to mull your Integrity Double Hung Bay unit. Failure to assemble and mull as recommended will void any warranty, written or implied. Regional applications and standards may vary, therefore Marvin is not responsible for interpretations of local codes and/or ordinances. Installation of Integrity products is the sole responsibility of the installer, contractor, structural engineer, architect, building owner and/or consumer. For additional information, consult your local Integrity dealer.

NOTE: When specifying or considering the structural load requirements for windows and doors, it is important to consider the method of fastening the unit(s) into the opening. Selection of the appropriate fastening method is the sole responsibility of the installer, contractor, structural engineer, architect, building owner and/or consumer.

IMPORTANT: Do not allow strong detergents, ammonia, solvents, chemicals or other harsh cleaning substances to come in contact with Ultrex surfaces as they can cause damage. If you wish to maintain the finish gloss of the Ultrex exterior, wash with soap and water and apply a coat of non-abrasive automotive wax.

CAUTION: It is absolutely imperative that a support platform be constructed below your Integrity Double Hung Bay unit. Additionally, the main support must be located directly under the sill of the Bay.

WARNING: Practice safety! Wear safety glasses or goggles and appropriate hearing protection when installing or performing adjustments to an Integrity window or door product.

STANDARD PARTS SHIPPED WITH UNIT

ILLUSTRATIONS (not to scale)	DESCRIPTION AND COLOR	PART/PROFILE NUMBER
	Interior Top Trim	W7002
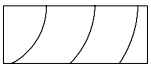	Interior Sill Trim	W6110
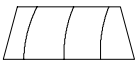	30° Vertical Interior Trim	W1174
	45° Vertical Interior Trim	W1244
PARTS SHIPPED WITH MULL KIT		
	30° 4 9/16″ Jamb Extension	W7291
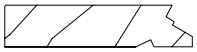	30° 6 9/16″ Jamb Extension	W7295
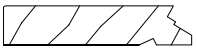	30° 6 13/16″ Jamb Extension	W2212
	45° 4 9/16″ Jamb Extension	W7329
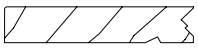	45° 6 9/16″ Jamb Extension	W7328
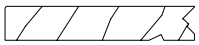	45° 6 13/16″ Jamb Extension	W2213
	Jamb Filler (Used on head jambs of all units and side jambs of center unit)	31712120 (120″)
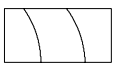	Jamb Filler, flanker unit	W7011
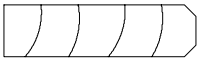	Wood Sill Filler Block	W7431
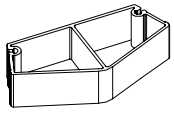	30° Mull Connector Block	A168
	45° Mull Connector Block	A167

PARTS SHIPPED WITH MULL KIT

ILLUSTRATIONS (not to scale)	DESCRIPTION AND COLOR	PART/PROFILE NUMBER
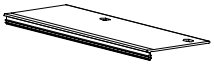	Sill / Side Jamb Nailing Fin	V112
	Nailing Fin Corner Gasket	11869513 (Pkg. of 4)
	30° Mull Foam Plug	10500108
	45° Mull Foam Plug	10500106
	Mulling Pin	A330
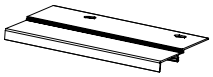	Drip Cap / Nailing Fin	V119

Jamb to Jamb Conversion Chart			
45° Bay		30° Bay	
Flanker Call Number Width	Outside Jamb Extension Conversion	Flanker Call Number Width	Outside Jamb Extension Conversion
22	30 5/8	22	37 5/8
26	36 1/4	26	44 17/32
30	41 15/16	30	51 15/32
34	47 9/16	34	58 3/8
36	50 13/32	36	61 7/8
38	53 1/4	38	65 5/16
42	58 7/8	42	72 1/4
50	70 7/32	50	86 1/8
54	75 7/8	54	93 1/32
62	87 3/16	62	106 7/8

To calculate outside width of jamb extension.

1. Locate the appropriate measurement conversion on the chart for your mull kit (30 or 45 degree); listed by FLANKER unit **CALL NUMBER WIDTH (first two digits of the call number)**.
2. Add CENTER unit **CALL NUMBER WIDTH (first two digits of the call number)** to flanker measurement conversion (found in step 1) to obtain jamb extension overall outside width in inches (Metric conversion to mm = Dim.(in) x 25.4).

YOU WILL NEED TO SUPPLY

Safety glasses — Hearing protection
Tape measure — Pencil or fine line marker
Hammer — 1/8″ punch or small nailset
2d finish nails — 4d finish nails
3′ – 4′ ruler/straight edge
Industrial scissors or aviation shears
3/16″ x 1″ 18 gauge staples w/gun
1/2″ x 1/2″ 18 gauge staples w/gun
1/2″ x 1 1/2″ 16 gauge staples w/gun
15/16″ x 1″ 16 gauge staples w/gun
#8 x 1 1/4″ flathead wood screws
Power mitre saw w/metal blade (or equivalent)
Wood saw (hand or power circular)
APA rated AFG–01 spec. (or equivalent) caulk/adhesive w/gun
High quality silicone sealer/caulk w/gun

REPLACEMENT PARTS

If replacement of parts becomes necessary, please contact your local Integrity dealer. Whenever possible, provide a part number.

INDEX

Mullling preparation 2
Mulling procedures 2
Head/Seatboard application 3
Final mulling procedures 4
Interior mull trim application 5

NOTE: Numbers listed in parentheses ( ) are metric equivalents in millimeters rounded to the nearest whole number.

ATTENTION: Specifications and technical data are subject to change without notice.

MULLING PREPARATION

1. Remove plastic and cardboard shipping wrap from units to be mulled, carefully inspect for hidden damage. Remove nailing fin from each unit, discard. Install nailing fin supplied on flanker outer side jambs. Lock all sash locks and lay units interior side up on a smooth level table or floor in the configuration desired.

CAUTION: Always use adequate hearing protection when operating power saws or staplers/nailers.

2. Measure, cut, and apply mull filler on center unit to full length of both side jambs, align filler with interior jamb liner face. Fasten filler to jamb liners with 1/2″ x 1/2″ 18 gauge staples spaced 6″ (15) apart. See illustration 2.

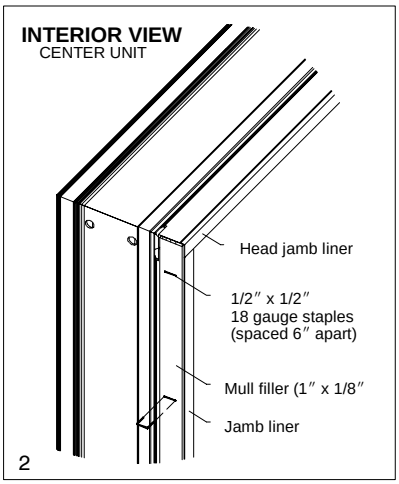

3. Measure the length of exterior Ultrex overall frame height. Cut the mull connector blocks to length (if needed) using a power miter saw with metal cutting blade (or equivalent). Subtract 1″ (25) from the frame height and cut the mull connector pins to length, if needed.

4. Stand units on a smooth level surface in configuration desired. **BE SURE TO RECHECK CONFIGURATION SET UP TO ENSURE PROPER MULLING ORDER.**

MULLING PROCEDURES

5. Position mull connector block (with mull tape applied) flush with exterior face of side jamb to be mulled. Align accessory kerfs and carefully tap mulling pin into kerfs using a wood block and hammer. Repeat at each mullion. Countersink mulling pins 1/2″ (13) using an 1/8″ punch or small nailset. See illustration 3.

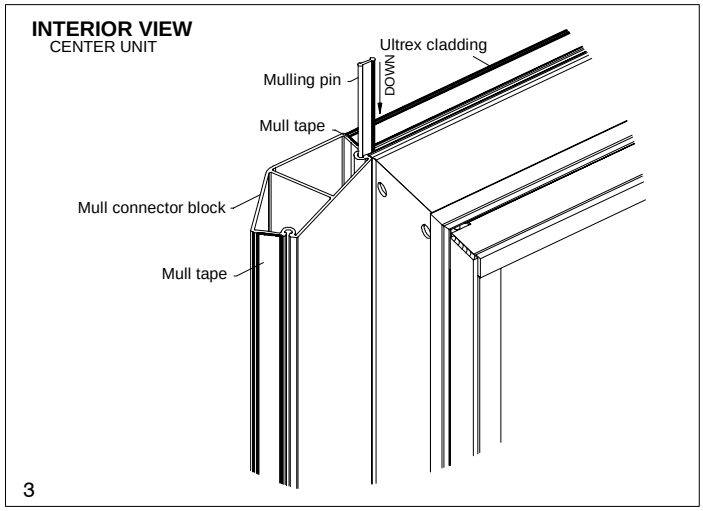

6. Cut jamb extensions the same length as jamb fillers applied in step 2 and position on each end unit to outer side jamb. Align jamb extension with outer edge of jamb filler. Attach jamb extension using 4d finish nails spaced 8″ (20) apart. See illustration 4.

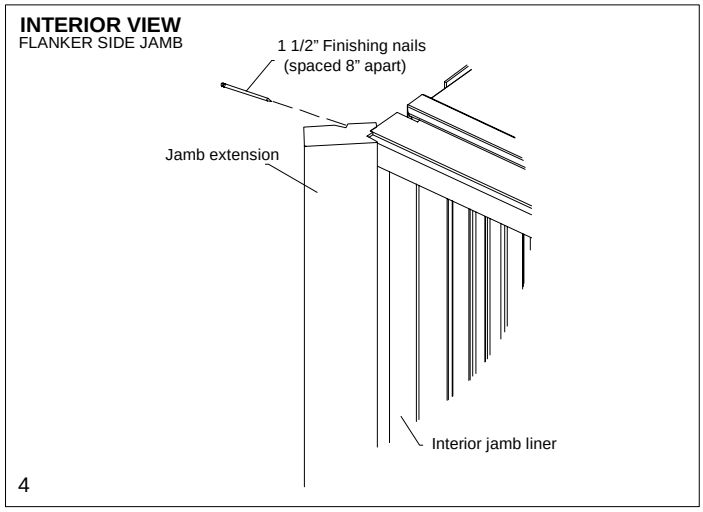

7. Refer to dimension table on page 1 for proper jamb to jamb dimension (measured from outside to outside of jamb extension). Check jamb to jamb measurement at top and bottom of the assembly, it must be equal. Diagonal measurements of interior must also be equal to ensure mulled assembly is square. See illustration 5.

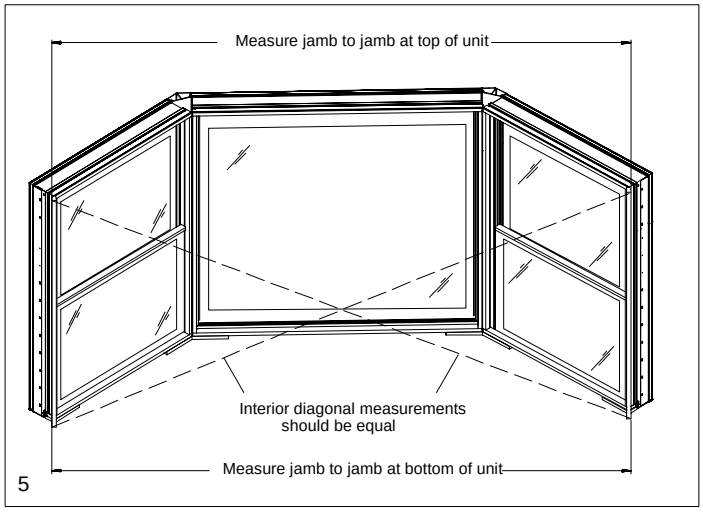

HEAD/SEATBOARD APPLICATION

8. Place headboard blank on top of mulled assembly and align interior edge flush with jamb extension. Temporarily fasten headboard to jamb filler or jamb extension on a flanker unit, recheck jamb to jamb measurement, temporarily fasten other side of headboard to jamb filler or jamb extension. Trace along exterior face of Ultrex frames, flanker unit outer side jambs, and jamb extension on the board. Remove temporary fasteners from headboard.

   Lay headboard on a flat surface with tracing lines up. To form a final cutting line, measure in 1 1/2″ (38) toward interior from lines drawn when tracing exterior face of Ultrex frames. Layout cutting lines along setback measurements on the headboard to intersect with side jamb lines previously traced (side jamb/jamb extension lines are cut as traced). Cut out headboard and use as a template to cut out seatboard. See illustration 6.

NOTE: When tracing headboard on seatboard blank, make sure the finished side will be to the interior when fastened to the unit.

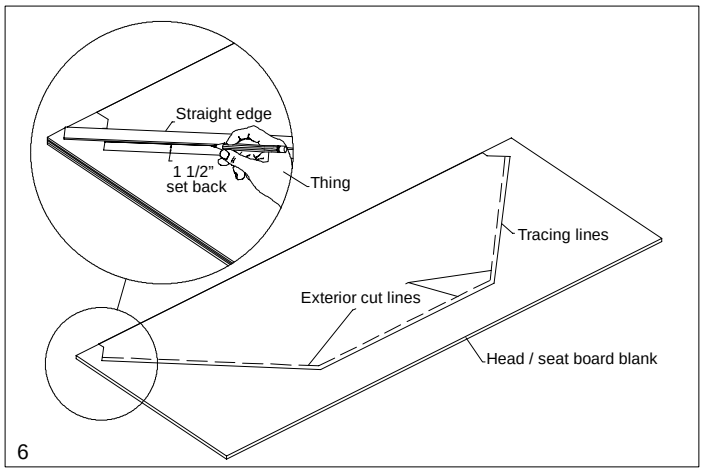

9. Put a small amount of silicone sealer inside mull connector cavities where foam plugs are to be positioned to hold plugs in place. Insert foam plugs flush with top edge of mull connector blocks.

   Apply 3/16″ (5) bead of caulk/adhesive in center of recess on head jamb. Lay head jamb filler in caulk/adhesive. Apply another 3/16″ bead of caulk/adhesive on top of filler. Repeat on each head jamb of unit. See illustration 7.

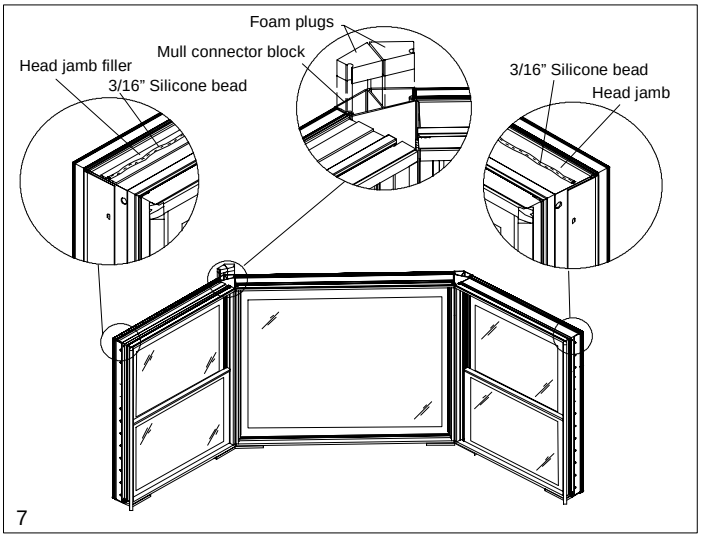

10. Recheck jamb to jamb and diagonal measurements to be sure they are correct (see step 8). Position headboard on unit and align interior edge flush with jamb extensions. Attach at flanker outer side jambs, jamb filler, and jamb extension using 1/2″ x 1 1/2″ 16 gauge staples (4-6 on each side) or use #8 x 1 1/4″ screws in predrilled holes (3-4 on each side). Trace screw lines on headboard at 2 1/2″ (64) and 5″ (127) in from **exterior edge of frames**. Attach using #8 x 1 1/4″ flat head screws spaced 6″ (152) to 8″ (203) on each line. See illustration 8.

CAUTION: DO NOT countersink screws into head/seat boards. Keep flush with exterior surface.

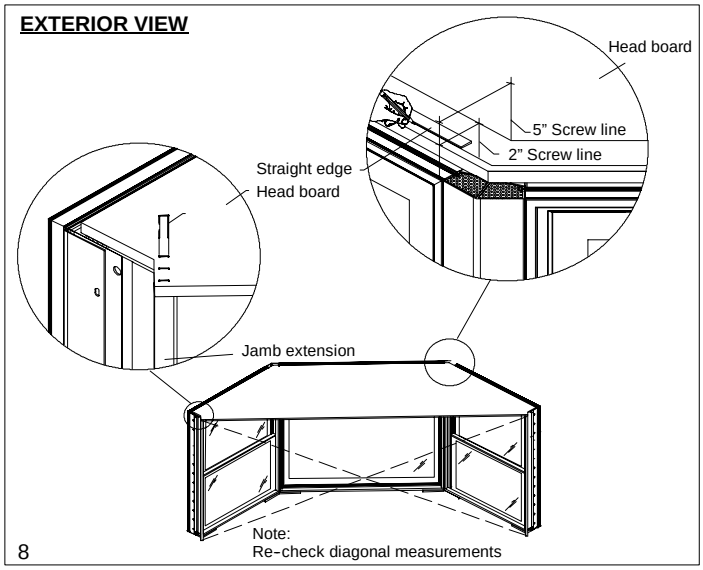

11. Turn mulled assembly over to expose sills. Remove shipping blocks from sill of each unit. Measure, cut, and apply sill filler blocks to full length of sill on each unit flush with interior face. Attach with 3/16″ x 1″ 18 gauge staples spaced 4″ (10) apart. See illustration 9.

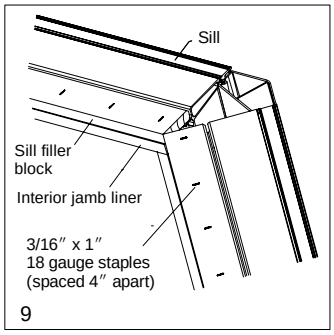

9

12. Fill mullion cavities loosely with fiberglass insulation (do not over pack). See illustration 10.

IMPORTANT: Do not use expanding foam type insulation in this application.

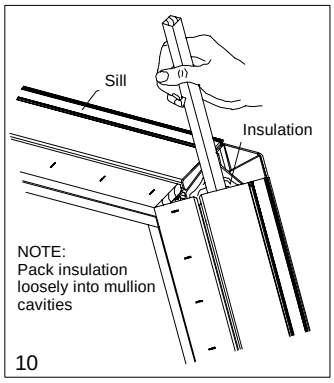

10

13. Put a small amount of silicone sealer inside mull connector cavities where foam plugs are to be positioned to hold plugs in place. Insert mull connector foam plugs in mull connector blocks. Repeat at each mullion. Apply 3/16″ (5) bead of caulk/adhesive 2 1/4″ (57) in from exterior edge of unit sills. See illustration 11.

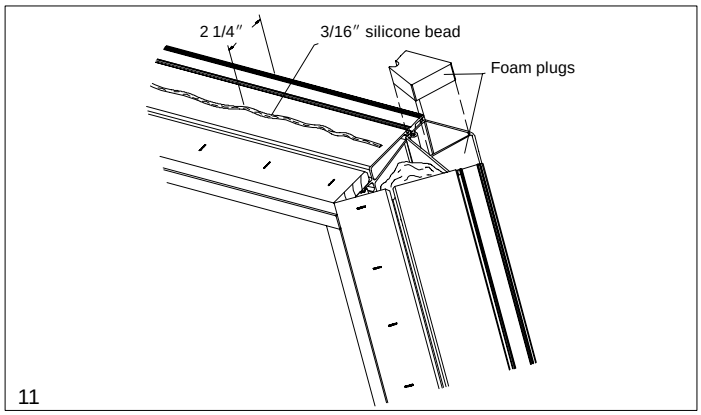

11

14. Repeat step 11 except, **USE ONLY ONE ROW OF SCREWS AT 5″ (127) SETBACK TO ATTACH SEATBOARD.**

15. Measure and cut nailing fin for sills of each unit, set aside for later use.

FINAL MULLING PROCEDURES

16. Turn unit over. A continuous nailing fin/drip cap must be notched out at mulls in order to follow head jambs of the unit. Center a lineal piece of nailing fin/drip cap long enough to span the entire unit at the midpoint of the center unit head jamb. Hold in place and mark the exterior center point of each adjacent mull connector block on beige surface of the drip cap.

17. Place the marked nailing fin/drip cap on a flat surface. A short section of mull connector block is used as a template to mark the cutting angles so a notch can be removed from the beige drip cap/nailing fin, this will allow the drip cap to bend around the mulls while leaving the clear vinyl (visible edge) continuous and intact. See illustration 12.

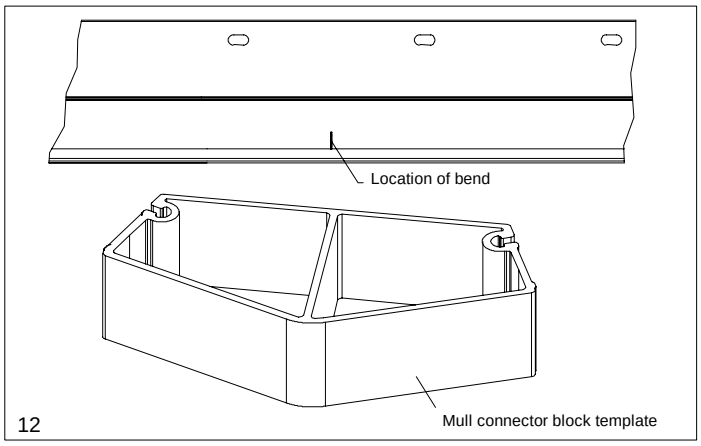

12

18. Place the center member of template on the drip cap at mark. While keeping the mark and center member aligned, hold one side of the template along the clear vinyl edge and scribe along the center member on beige portion of the drip cap. See illustration 13. Next pivot the opposite side of template along clear vinyl edge of drip cap and scribe along the center member. From the point at which each angled mark meets the nailing fin portion scribe lines straight across the nailing fin (this line should be perpendicular to the edge of the drip cap). See illustration 14.

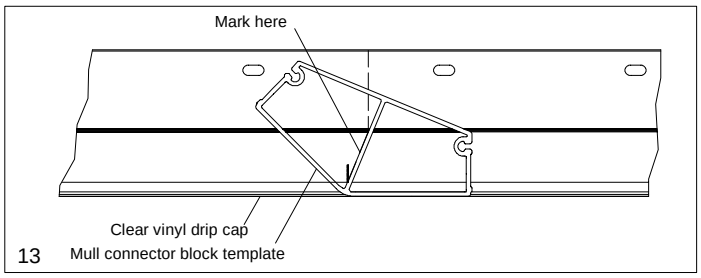

13

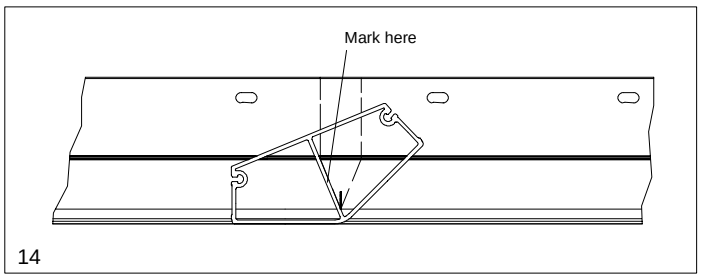

14

19. The two lines scribed on the drip cap should make a “V” notch, with the tip of the “V” starting where the clear and beige vinyl meet at the center mark from step 18. Repeat step 19 at the other mullion center mark.

20. Cut out areas marked with an industrial scissors or aviation shears. **DO NOT CUT THROUGH CLEAR VINYL SECTION OF DRIP CAP**, except when trimming off at ends of flanker units. See illustration 15.

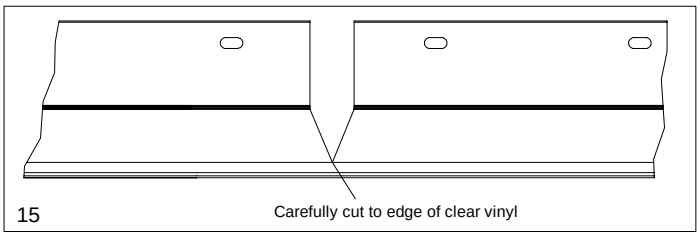

15

21. The bottom connecting barb of nailing fin/drip cap must be cut away at each mullion block approximately 2 1/2″ on each side of notch removed. See illustration 16.

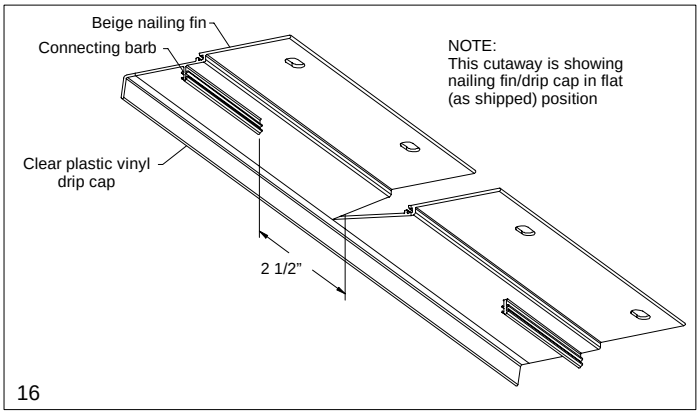

16

22. Prior to attaching drip cap, place a bead of silicone sealer/caulk on center member of the mull connector blocks, this will help seal the drip cap.

23. Apply nailing fin/drip cap to head jambs of unit. Seal top of drip cap at mullion cuts with a small bead of silicone sealer/caulk. Cut excess nailing fin/drip cap at ends flush with side jambs. Temporarily fasten sill nailing fin previously cut in step 16 to top of headboard using tape or 1/2″ fasteners (do not fasten if unit is to be installed at mulling site).

24. Fasten interior mulled side jambs with 15/16″ x 1″ 16 gauge staples spaced 4″ (10) to 6″ (15) apart. Place staples diagonally into jamb liners so interior mull trim will cover the staple heads. See illustration 17.

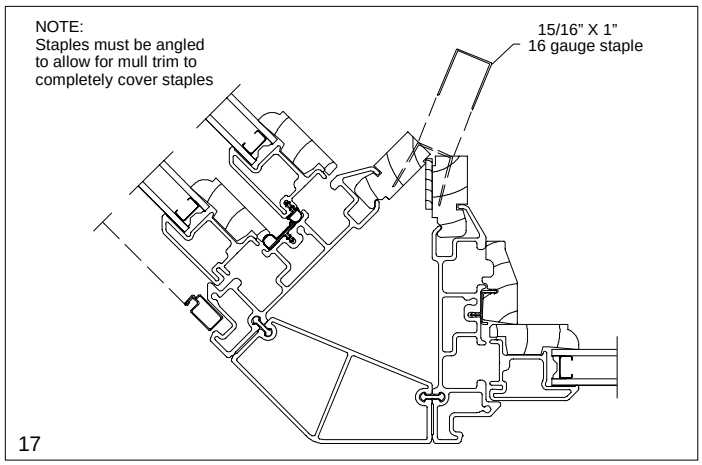

17

INTERIOR MULL TRIM APPLICATION

25. If **both** a head and seatboard were installed apply interior vertical and horizontal mull trim (if not, apply mull trim after unit is installed and interior casing has been applied). Measure from head to seatboard and cut interior vertical mull trim to length. Center trim at mullion so reveals are equal on each side. Apply trim using finish nails spaced 6″ (15) to 8″ (20) apart, set with nailset. See illustration 18.

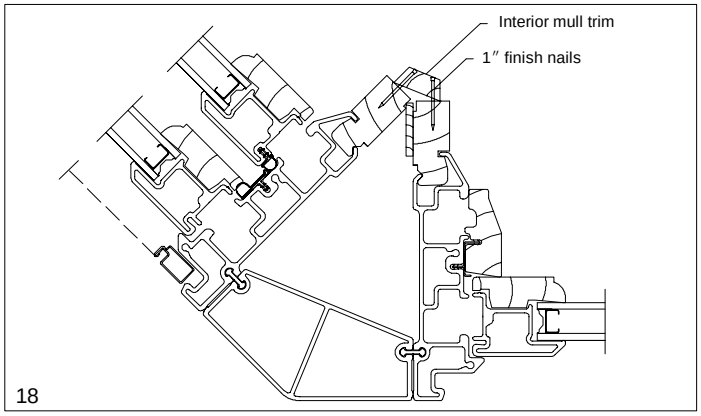

18

26. Apply headboard horizontal trim and seatboard horizontal trim where they meet the frames. Measure between jamb and or mull trim. Cut to length and fasten trim using finish nails spaced 6″ (15) to 8″ (20) apart, set with nailset. Repeat on each unit. See illustration 19.

NOTE: If the unit is not to be installed/finished immediately it is recommended that cardboard or heavy paper be applied to head/seat board(s) to minimize handling or construction damage. Use minimum tape contact with wood to avoid adhesive contamination.

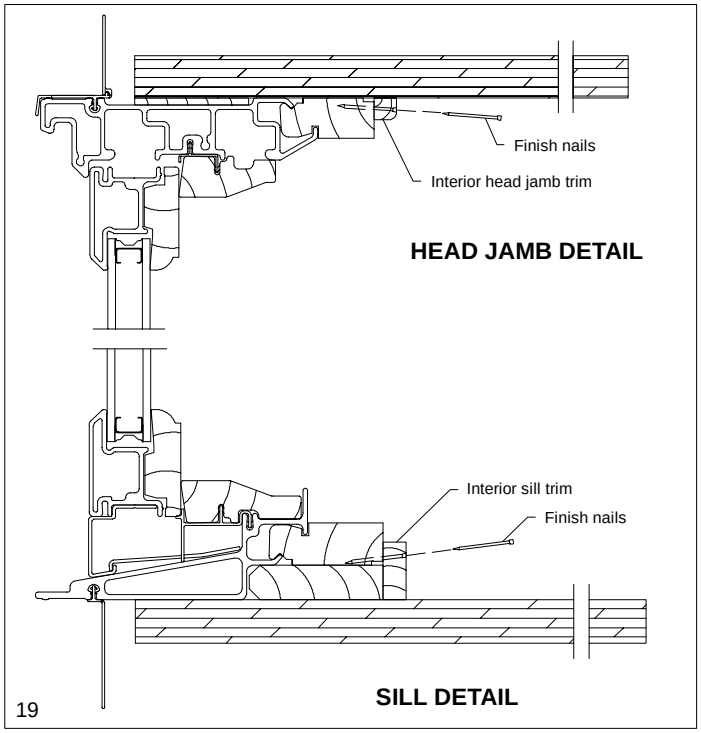

19