Integrity Inswing French Door

Installation and Finishing Instructions

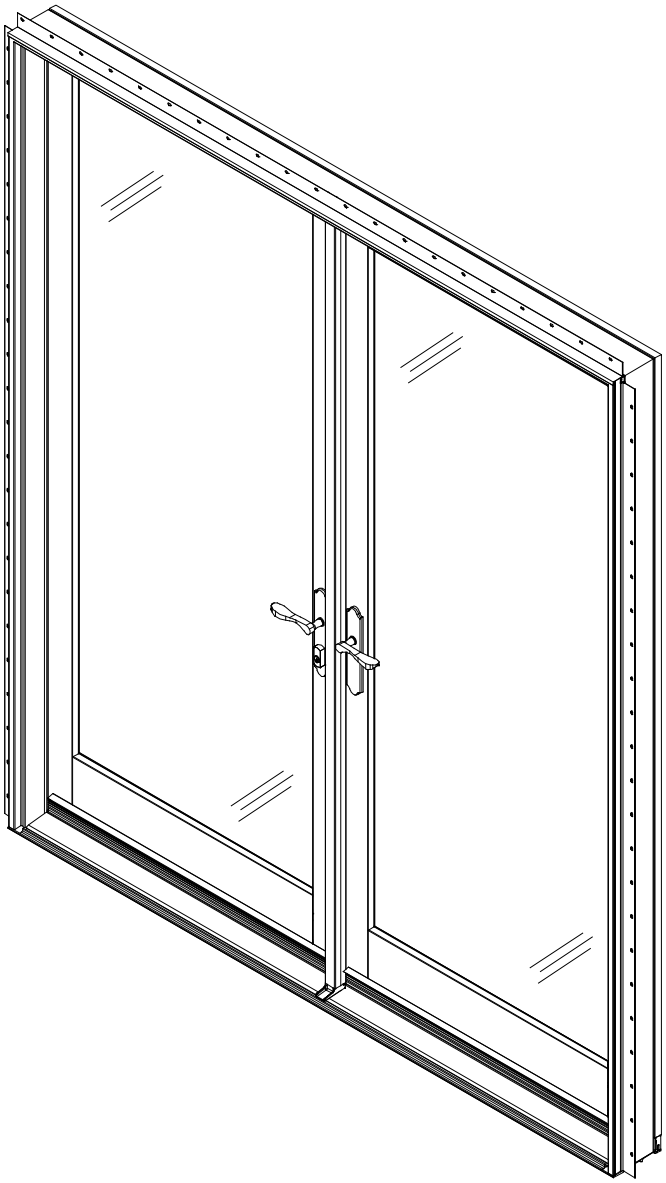

Integrity
from MARVIN
Windows and Doors

2011-06-27
11708518

BEFORE YOU BEGIN

IMPORTANT: Read these instructions thoroughly before beginning to install your Integrity Inswing French Door. Failure to install as recommended will void any warranty, written or implied. Regional applications and standards may vary, therefore Integrity Windows and Doors is not responsible for interpretations of local codes and/or ordinances. Installation of Integrity products is the sole responsibility of the installer, contractor, structural engineer, architect, building owner and/or consumer. After installation is completed, these instructions should be retained by the building owner. For additional information, consult your local Integrity Windows and Doors dealer.

NOTE: When specifying or considering the structural load requirements for windows and doors, it is important to consider the method of fastening the unit(s) into the opening. The methods contained herein may not be appropriate for all performance requirements. Selection of the appropriate fastening method is the sole responsibility of the installer, contractor, structural engineer, architect, building owner and/or consumer.

CAUTION: This door is glazed with tempered glass in accordance with state and federal laws. If broken, replacement door panel(s) are available from your Integrity dealer.

CAUTION: Integrity Windows and Doors recommends special care be taken when mulling a transom above the Integrity Inswing French Door. Transom installation may require additional support that allows unaffected door operation. Contact your Integrity dealer for additional information.

IMPORTANT: All windows and doors must have properly installed flashing systems and sealant at unit perimeter in accordance with accepted and proven construction methods.

IMPORTANT: Do not allow strong detergents, solvents, chemicals or other harsh cleaning substances to come in contact with Ultrex surfaces as they can cause damage. Remove fresh paint splashes, grease or caulking with naphtha or isopropyl alcohol. If you wish to maintain the finish of the Ultrex, wash with soap and water.

WARNING: Practice safety! Wear safety glasses or goggles and appropriate hearing protection when installing or performing adjustments to an Integrity window or door product.

ATTENTION: Specifications and technical data are subject to change without notice.

WARNING: Drilling, sawing, sanding or machining wood products generates wood dust, a substance known to the State of California to cause cancer. Avoid inhaling wood dust or use a dust mask or other safeguards for personal protection. California Health and Safety Code Section 25249.6.

NOTE: Numbers listed in parentheses ( ) are metric equivalents in millimeters rounded to the nearest whole number.

REPLACEMENT PARTS

See Integrity Parts & Service Manual for ordering of replacement parts or contact your local Integrity representative.

YOU WILL NEED TO SUPPLY

Safety glasses	Hearing protection
Level (4′-6′)	Square
Tape measure	Hammer
Interior trim	Wood shims
Fiberglass insulation	2″ roofing nails
Phillips screwdriver	Flat screwdriver
#2 Robertson square drive screwdriver	Silicon Sealant[1]
Construction Adhesive[2]	

INDEX

	Page
Standard Parts Shipped	2
Rough Opening Framing	3
Rough Opening Preparation	3
Installing The Door	3
Permanently Fastening Door (through jambs)	5
Sealing the Installation	6
Final Installation Procedures	8
Handle Operation	8
Hinge Adjustment Procedures	9

[1] Sealant must be Grade NS Class 25 per ASTM C920 and compatible with door product and the finished exteriors of the building.

[2] Must be APA AFG-01 spec adhesive

STANDARD PARTS SHIPPED WITH UNIT					
ILLUSTRATIONS*	**PART DESCRIPTION**	**XX**	**XO/OX**	**X**	**O**
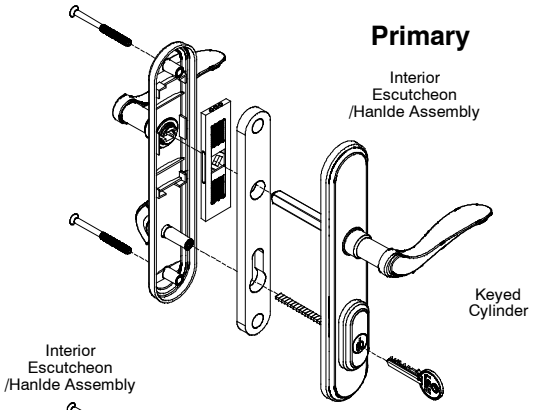	Primary Handle Set with escutcheon plates, machine screws, and keyed cylinder with keys.	1	1	1	–
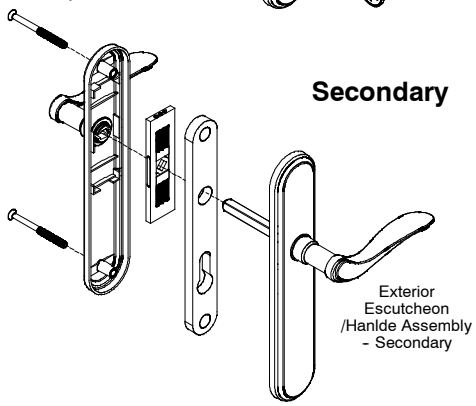	Secondary Handle set with escutcheon plates and machine screws.	1	–	–	–
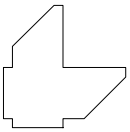	Nailing Fin Corner Gasket	1	1	1	1
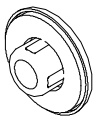	Hole Plugs w/ gaskets	–	4	2	4
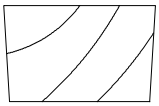	3/8″ Oak flat head plug	1	1	–	–
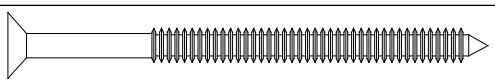	#8x 2 1/2″ flat head screws	8		4	
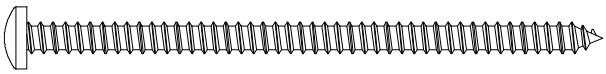	#8 x 3″ Panhead screws, beige		5	2	4
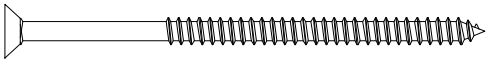	#8x2 1/2″ flat head screws, SS	1	–	–	–
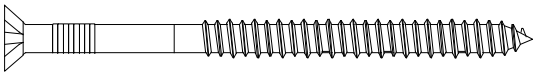	3/16 x 2 3/4″ masonry anchor	1	1	–	–
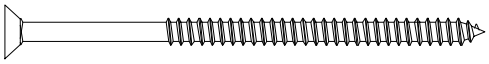	#8x2 1/2″ flat head screws *NOTE: Supplied with handle set. Either brass or stainless steel.*		1	1	

*Screws illustrated above are to scale

ROUGH AND MASONRY OPENING REQUIREMENTS

1. **Rough openings (RO)** should be 1″ (25) wider than the outside measurement of the frame and 1/2″ (13) higher. **Masonry openings (MO)** should be 1/2″ wider than the outside measurement of the frame or casing and 1/4″ (6) higher than the outside measurement of the frame or casing. When framing rough opening, care should be taken to ensure the sill plate is level and the opening is square, straight and plumb.
2. Check the bottom surface of the opening to ensure it is flat and level.

IMPORTANT! The previous steps are crucial to obtain a trouble-free installation. If previous conditions are not met, the installer must take corrective actions to alter the opening(s) before proceeding. For typical wood frame construction it is also essential that the wall sheathing be a solid surface to ensure that the unit can be secured firmly to the wall.

NOTE: The following procedures outline the recommended method to prepare the rough opening for construction applications using a continuous air barrier system. For construction applications using building paper skip to the section, "Rough Opening Preparation-Building Paper".

ROUGH OPENING PREPARATION - AIR BARRIER

3. When trimming away the air barrier at openings, first cut horizontally across the entire width of the rough opening at the head jamb and sill. Then cut vertically in the center of the opening from sill to head jamb. Finally cut the head jamb corners diagonally away from the opening. The complete cut should be in a "I" fashion. **DO NOT cut air barrier diagonally from corner to corner in an "X" fashion.** See illustration 2.

2

4. Wrap barrier at the sides to the interior and tack in place. Do not tack barrier at head jamb. Fold the head jamb flap up and tack in place or tuck beneath. This will allow the top flap to fit over the head jamb flashing after installation of the door. See illustration 3.

3

5. Apply a continuous bead of sealant[1] 3/4″ (19) from the top and sides of the door opening. See illustration 4.

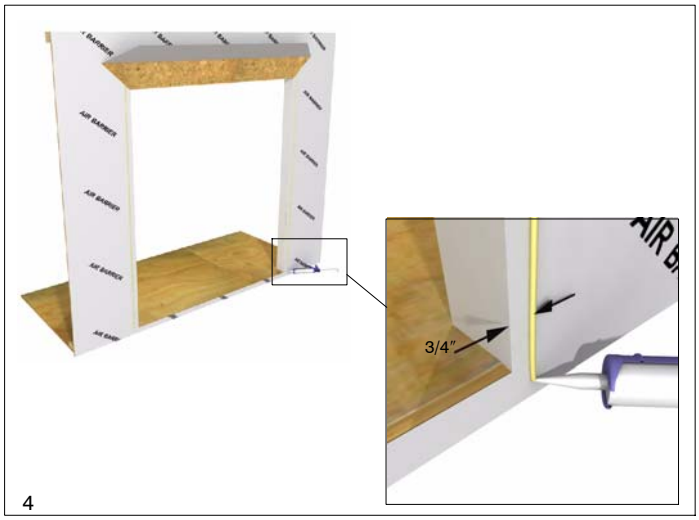

4

6. Apply a 3/8″ (10) bead of adhesive[2] on the subfloor at the interior and exterior edges of the door opening. Then lay another bead approximately 2 1/4″ (57) from the interior bead in a slight wiggle pattern. See illustration 5. Sealant beads should contact the interior and exterior flat portions of the sill as well as the center rib. Proceed to the **"Installing the Door"** section.

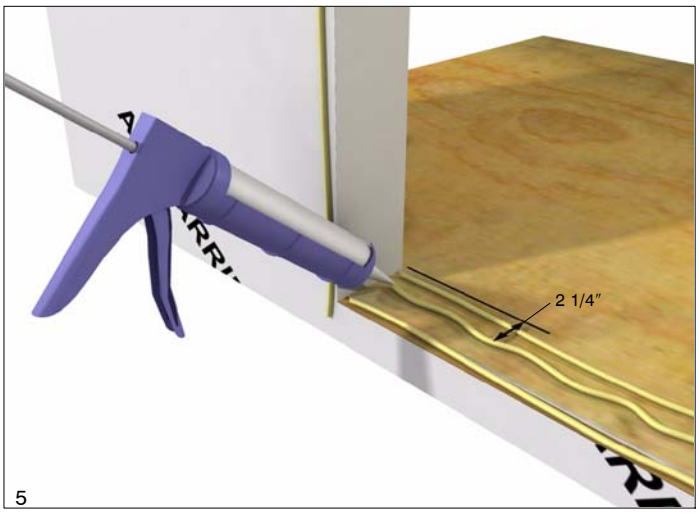

5

ROUGH OPENING PREPARATION - BUILDING PAPER

NOTE ON BUILDING PAPER APPLICATIONS: Apply the main courses of building paper after the door has been installed.

7. Cut two 13″ (330) pieces of Grade "D" building paper 8 1/2″ (216) longer than the rough opening height. (Adjust material width for wall thickness. Add 9″ (229) to the wall thickness to determine width.)

8. Position the pieces in place overlapping the rough opening by as much as the jamb depth. The wrap should extend above the rough opening by 8 1/2″ (216). Tack in place around the edge of the rough opening. Use a utility knife to cut the paper even at the head jamb. Fold to the interior and tack in place. See illustration 6.

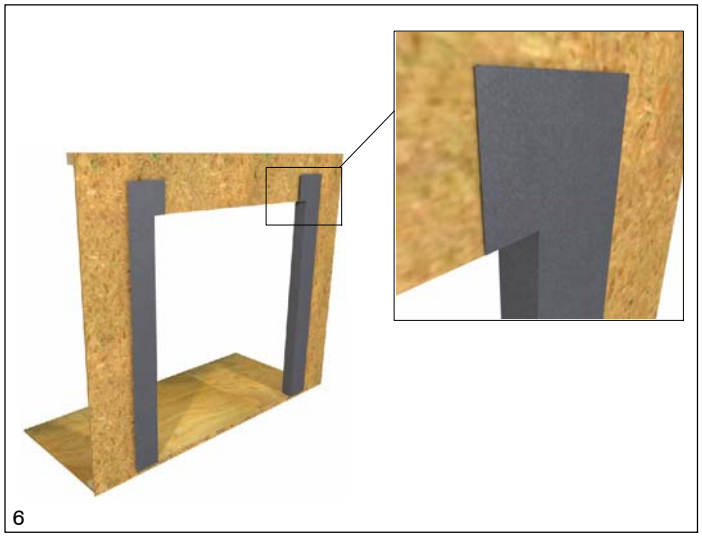
6

9. Apply a continuous bead of silicone sealant[1] 3/4″ (19) from the top and sides of the door opening. See illustration 7.

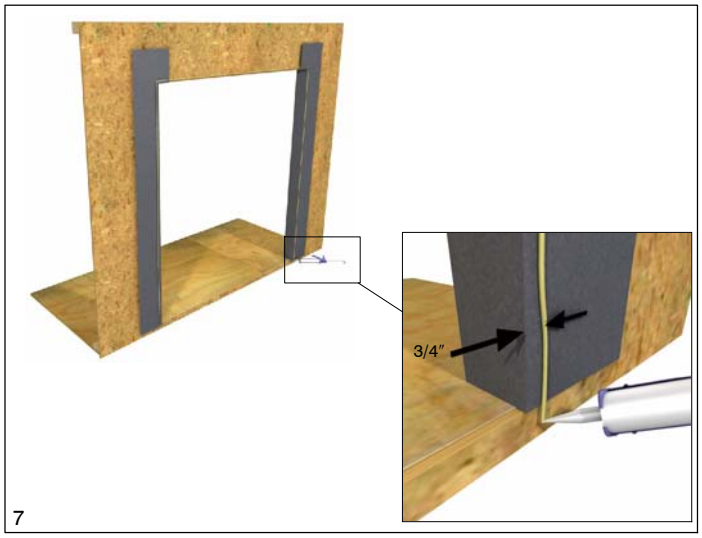

7

10. Apply a 3/8″ (10) bead of adhesive[2] on the subfloor at the interior and exterior edges of the door opening. Then lay another bead approximately 2 1/4″ (57) from the interior bead in a slight wiggle pattern. See illustration 8. Sealant beads should contact the interior and exterior flat portions of the sill as well as the center rib. Proceed to the **"Installing the Door"** section.

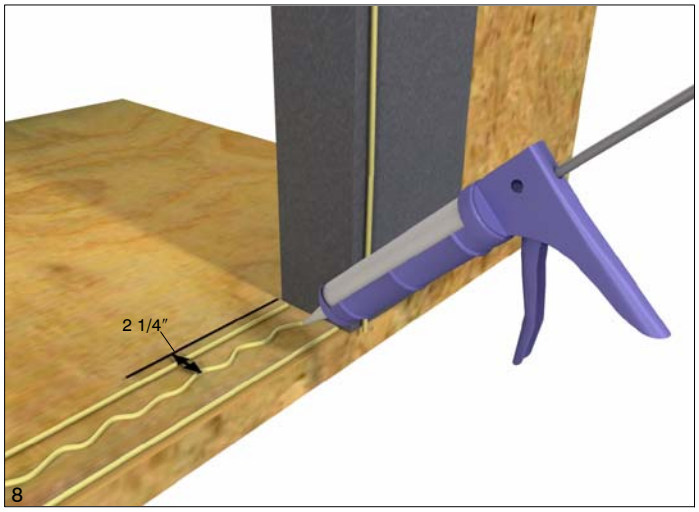

8

INSTALLING THE DOOR

11. On all units factory or field mulled, mullion joints must be sealed prior to installation. Apply silicone sealant at all mullions from the frame exterior edge to the drip cap/nailing fin kerf and across the kerf over the recessed mulling pin as shown in illustration 9. Apply nailing fin connectors at mullions by removing the paper backing from the connector and pressing into place. Position the factory applied nailing fin upright for installation following the instructions provided. Do not apply nailing fin corner gaskets at this time.

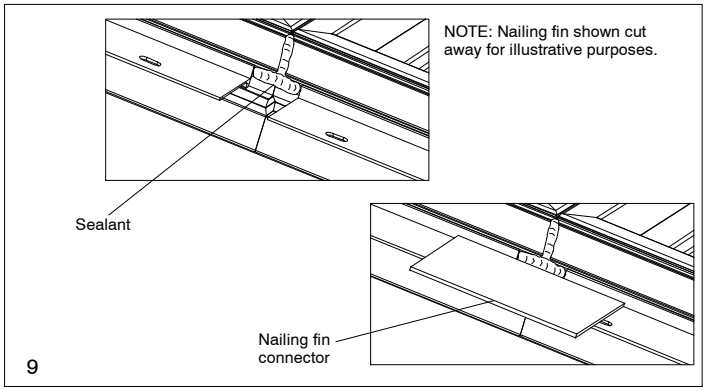

9

CAUTION: Avoid personal injury and/or damage to the product. Get help from another person when moving doors around during the installation process.

NOTE: If you will be fastening the door to the opening using structural brackets, attach brackets 4″ from each corner and 12″ OC around the perimeter of the frame.

12. Tip the door into place and center in the opening. Check the sill for level and fasten the bottom corners of the nailing fin with a 2″ (19) roofing nail or secure with structural brackets to the interior framing.*
    Do not drive the nails all the way as you may need to make slight adjustments. See illustration 10.
    * Specific instructions are supplied with the product.

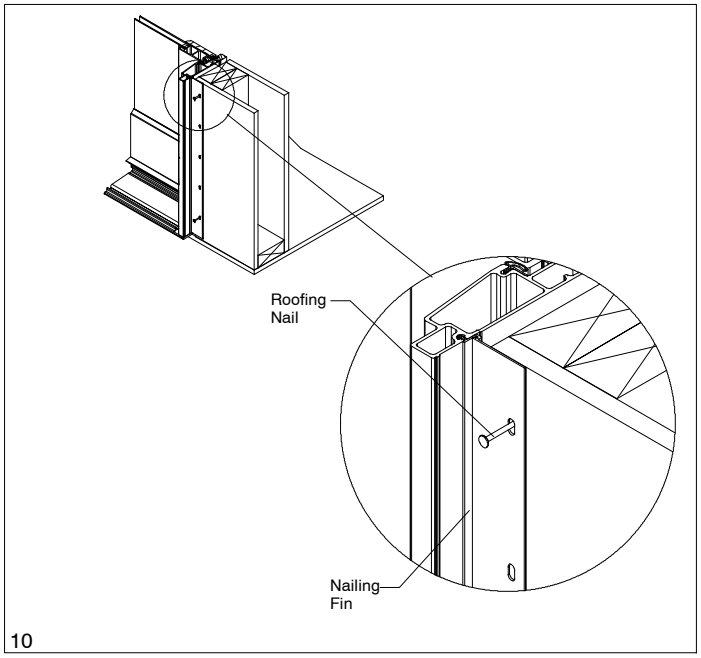

10

13. Square the frame in the opening by taking the diagonal measurements. The frame is square when diagonal measurements are equal. Move the top of the frame from side to side until square by placing shims between the frame and opening four to six inches from the top of the unit. See illustration 11.

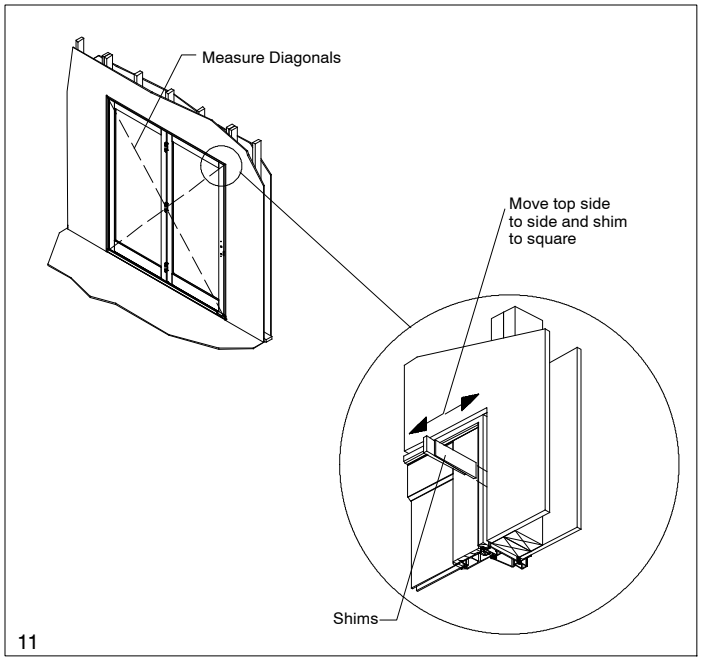

11

14. Check the jambs for plumb from interior to exterior and adjust shims as necessary.

15. When the frame is square and plumb in the opening, fasten the top corners of the nailing fin.

16. Before the adhesive has time to set up and cure, check the sill for level. If the sill is bowed up press the sill into the adhesive. Some multiple wide units have pre-drilled screw holes in the sill liner. Secure the oak sill liner to the subfloor with the 3/16 x 2 3/4″ flat head masonry anchor provided. Drive screw through the pre-drilled hole(s) on sill liner until countersunk then cover with oak plug provided. Do not pre-drill through subfloor. See illustration 12.

    In masonry applications, use the pre-drilled hole in sill liner as a guide and drill 2 1/4″ (70) into the concrete with a 3/16″ (5) masonry bit. Fasten the sill liner to the floor with the masonry anchor until the screw is countersunk (penetrating about 1 3/4″ (44) into the concrete). Cover with oak plug provided. See illustration 12.

CAUTION: Securing sill while using Marvin SillGuard™ rigid sill panning: If you are installing a door in a rough opening that uses SillGuard to pan the sill, you must secure the sill liner to the subfloor at every **meeting stile**. Follow the instructions above for details.

WARNING! Avoid a choke hazard for small children. Make sure plug is firmly secured in screw hole.

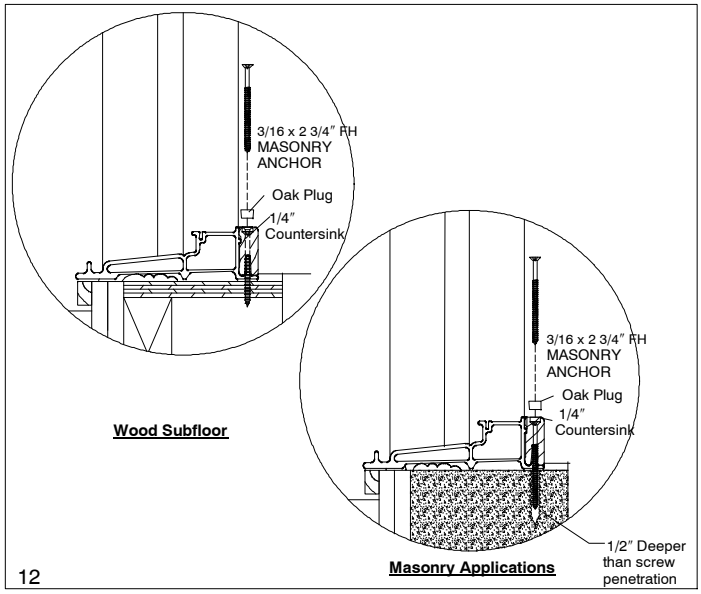

12

17. Install the handle set. Follow instructions included with the hardware.

PERMANENTLY FASTENING DOOR (through jambs)

IMPORTANT: Do not over-tighten screws. You may bow or distort the jambs causing poor performance and hinder operation of the door.

WARNING: Do not fasten through mulled jambs with #8 x 3″ screws. Damage to the unit(s) will occur. Step 18 applies only to jambs that are directly adjacent to the rough opening.

18. On **stationary and locking jambs**, two pre-drilled screw holes are located at the top and bottom of the jambs at the exterior. Drive the #8 x 3″ pan head screws into the framing members (Details B & C below). Do not completely tighten screws as some adjustments will be necessary. From the interior apply shims directly above the screws. See illustration 13 below for screw locations on all applications.

19. **On all configurations** remove center screw from locking jamb strike plates and replace with a #6 x 2 1/2″ brass or stainless steel screw provided with the handle set (Detail A below). Shim above each hinge and strike plate.

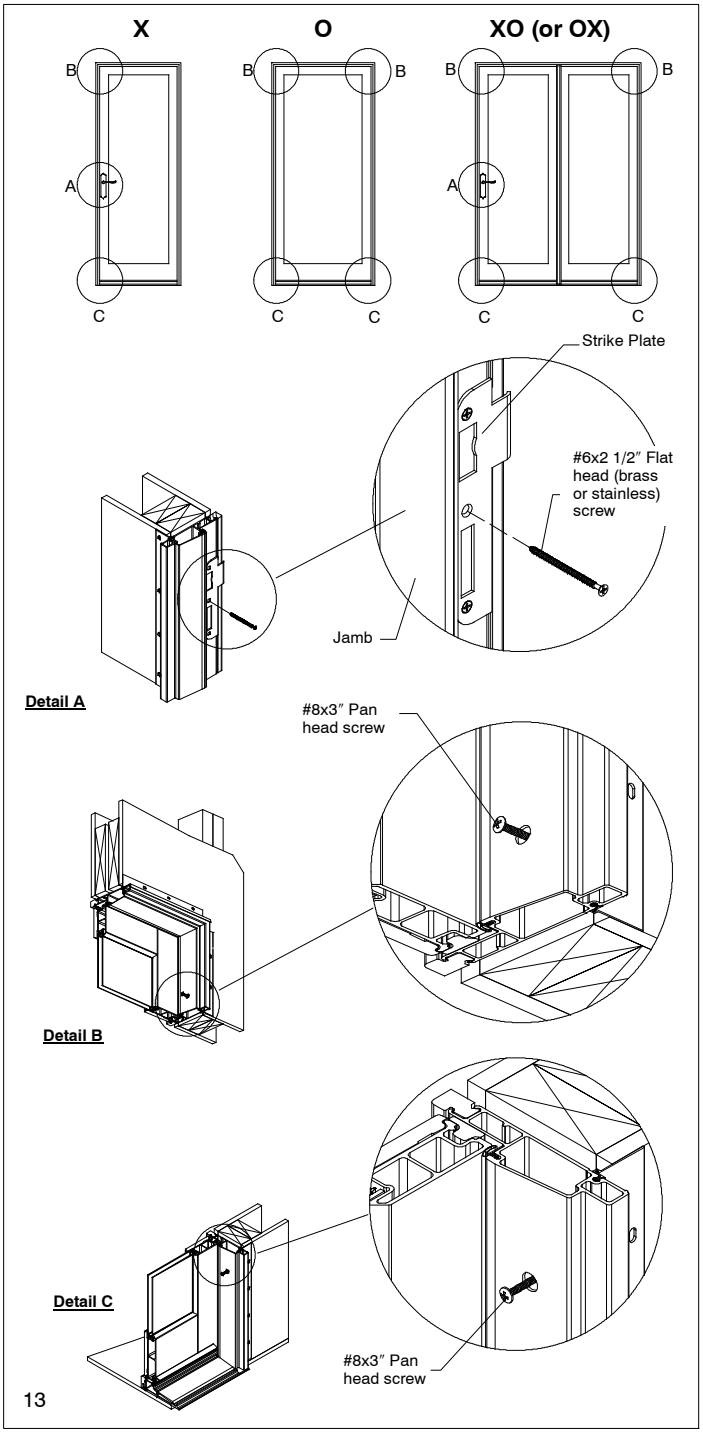

20. On hinge jambs, open the door (90 degrees) to access the screws in the hinges and support the weight of the panel by adding blocking under the far edge (handle side of panel) to the floor. Use a level to plumb the hinge jamb and adjust the panel support blocking as needed. Remove one of the screws closest to the exterior from each hinge and replace with the #8 x 2 1/2″ flat head color matched screws. See illustration 14 below for screw locations on all configurations.

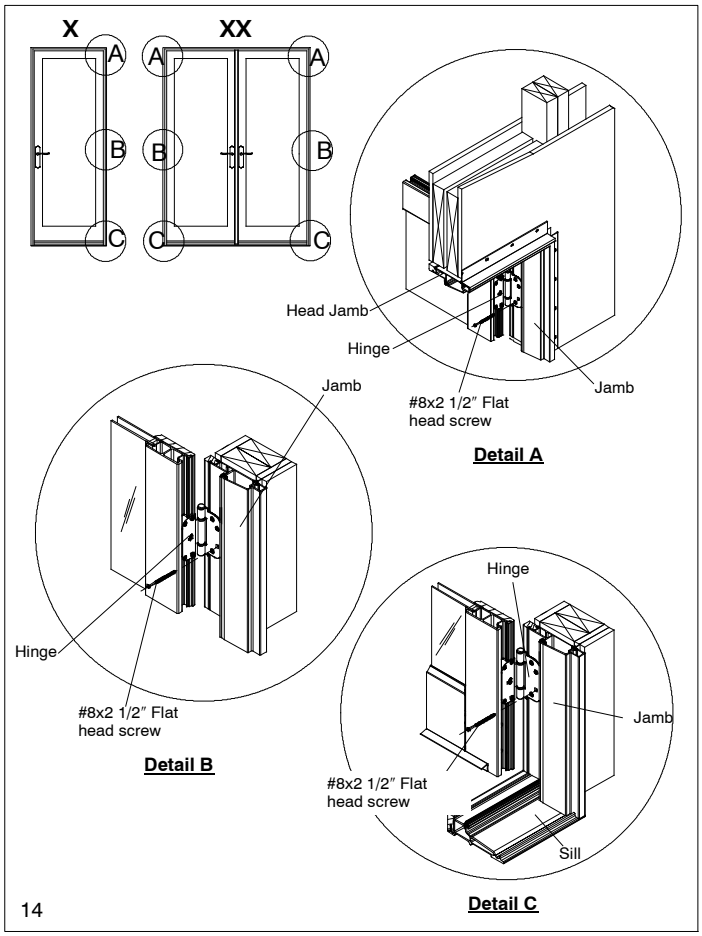

NOTE: If you are installing a door with a transom or round top mulled above, do not drive long screws through strike plate or brackets as described in steps 21 and 22.

21. **On OX or XO configurations**, fasten the head jamb to the rough opening through the stationary head jamb bracket using the #8 x 3″ pan head screws. See illustration 15. Shim within 1-2” of bracket.

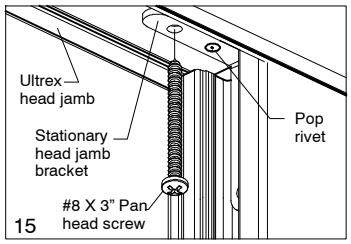

22. On **XX configuration**, remove one of the screws from the head jamb strike plate and replace with the #6x2 3/4″ flat head screws provided. See illustration 16.

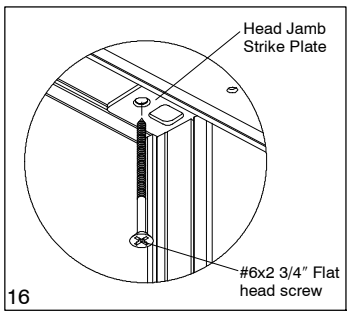

MINIMUM SHIMMING REQUIREMENTS

Place additional shims around the unit perimeter as necessary. Shims must be placed 4-6″ from each corner and a maximum 15″ (381) apart on center. DO NOT OVER SHIM.

23. Check diagonal measurements to ensure the door is square in the opening. Adjust screws and shims as necessary.

24. When the unit is completely fastened to the opening and is square and plumb, cover the stationary and locking jamb screw holes with the colored plugs provided. Make sure the plug is seated tightly. See illustration 17.

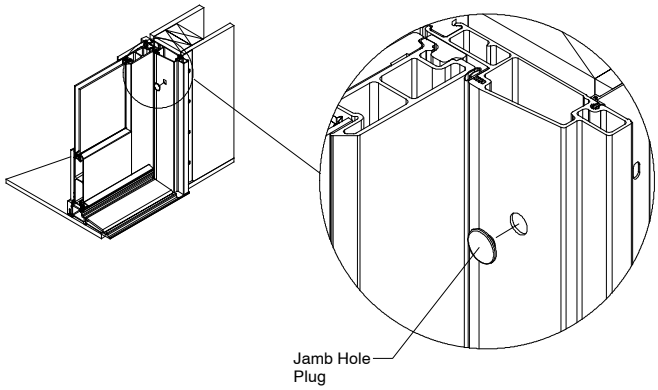

17

25. Permanently fasten nailing fin to exterior sheathing, space fasteners 6-8″ (152-203) apart (maximum) along the side and head jambs and a maximum of 6″ from each corner .

SEALING THE INSTALLATION - AIR BARRIER

26. Apply nailing fin corner gaskets to each corner of the nailing fin. Follow instructions on back of gasket. (Units with clad flat casing do not use corner gaskets.)

IMPORTANT: Nailing fin is not designed to be a weatherproof flashing.

27. If not done already, install a drip cap along the head jamb or head jamb casing. Be sure to apply a bead of sealant[1] along the back sides of both vertical and horizontal surfaces of the cap that come in contact with the door, door casing, and/or sheathing. See illustration 18.

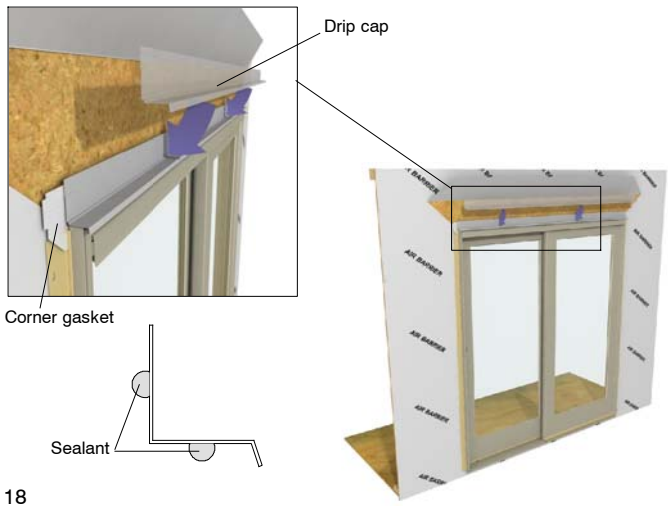

18

28. Lap vertical strips of self sealing adhesive flashing onto the unit or casing and out over the air barrier. Make small cuts at the head jamb to allow the flashing to fold back onto the exterior. See illustration 19.

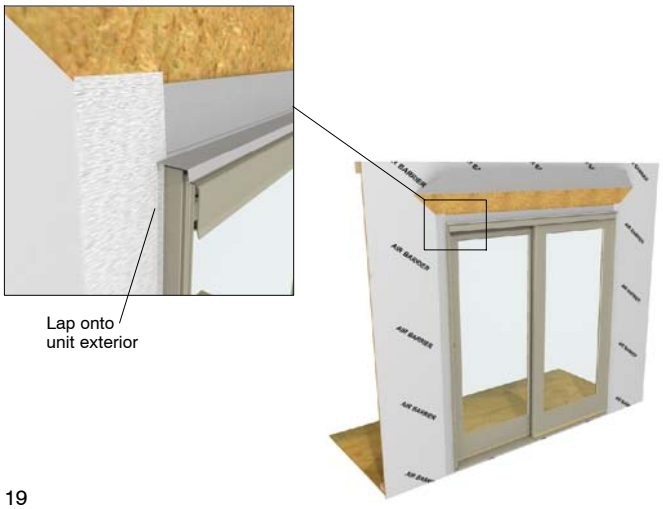

19

29. Install another layer of horizontal adhesive flashing lapping onto head jamb of unit and over exterior sheathing. Horizontal flashing at head jamb must extend and cover vertical flashing previously installed at the jambs. See illustration 20.

20

30. Fold head jamb air barrier down over the head jamb flashing. Apply seam seal tape over the diagonal cut in air barrier. Make sure the tape laps onto the unit or casing. Cut 3″ (76) lengths of tape and install every 12″ (305) along the head jamb to help keep the flap in place until exterior finish is applied. Tape and seal any seams and fasteners directly above the unit. See illustration 21. Proceed to the **"Final Sealing Procedures"** section.

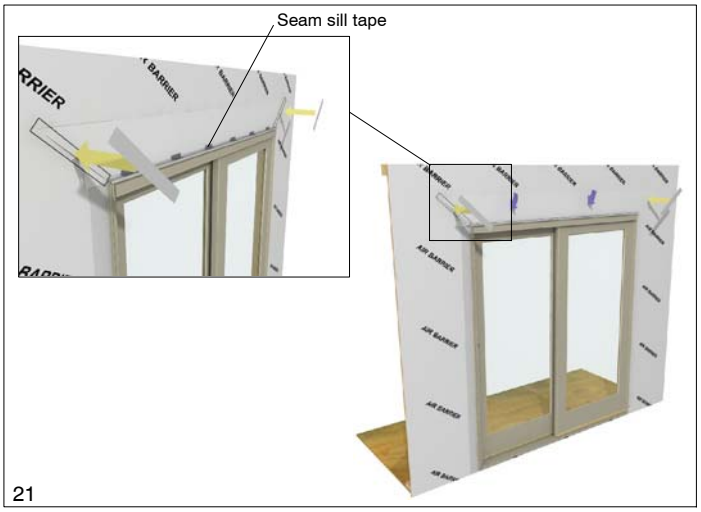

21

SEALING THE INSTALLATION – BUILDING PAPER

31. Apply nailing fin corner gaskets to each corner of the nailing fin. Follow instructions on back of gasket. (Units with clad flat casing do not use corner gaskets.)

> **IMPORTANT:** Nailing fin is not designed to be a weatherproof flashing.

32. If not done already, install a drip cap along the head jamb or head jamb casing. Be sure to apply a bead of sealant[1] along the back sides of both vertical and horizontal surfaces of the cap that come in contact with the door, door casing, and/or sheathing. See illustration 22.

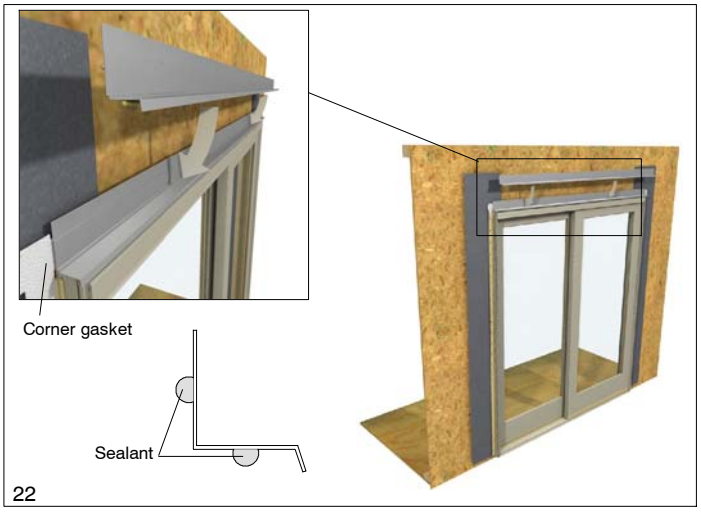

22

33. Lap vertical strips of self sealing adhesive flashing onto the unit or casing and out over the building paper. Make small cuts at the head jamb to allow the flashing to fold back onto the exterior. See illustration 23.

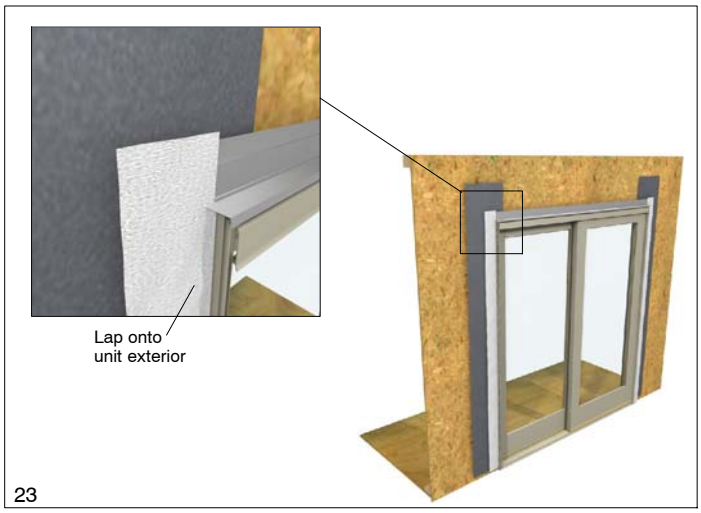

23

34. Install another layer of adhesive flashing lapping onto head jamb of unit and over sheathing. Horizontal flashing at head jamb must extend and cover vertical flashing previously installed at jambs. See illustration 24.

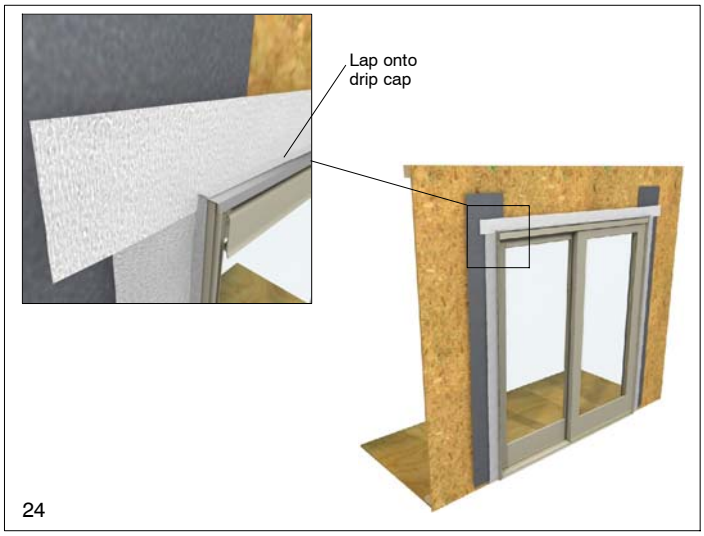

24

35. Tuck a double ply layer of building paper beneath previous layers of building paper and adhesive flashing at jambs and staple in place. Overlap the previous course by at least 2″(51). Continue installing courses beyond the height of the door unit as shown. See illustration 25.

25

36. Size and cut a double roll of building paper to bridge the opening between the paper courses at the sides. This course should extend past the paper previously installed by at least 6″(152). See illustration 26. Proceed to the **"Final Sealing Procedures"** section.

26

FINAL INSTALLATION PROCEDURES

37. From interior side of unit, unlock operating panel. Open and remove shipping block from panel at lock stile. Close and lock door panel. See illustration 27.

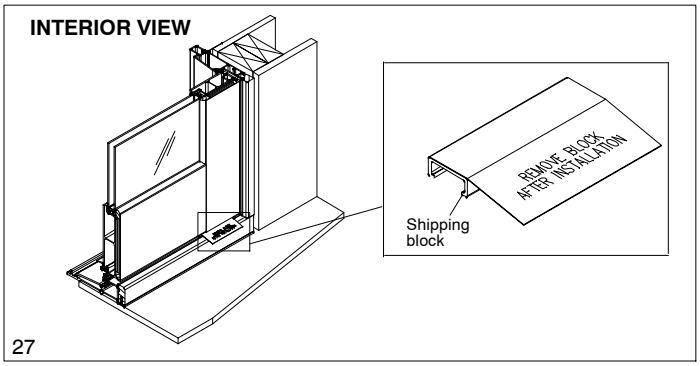

27

38. Check the door to see if the panel swings easily. Follow hinge adjustment procedures if necessary.

39. Install a sill nose support block under sill if the existing opening does not extend far enough to support the door sill. Fabricate from treated lumber and attach to underside of sill with construction adhesive. Nail the block to the sheathing to hold it in place. Apply generous amount of sealant along the underside of the sill as shown in illustration 28.

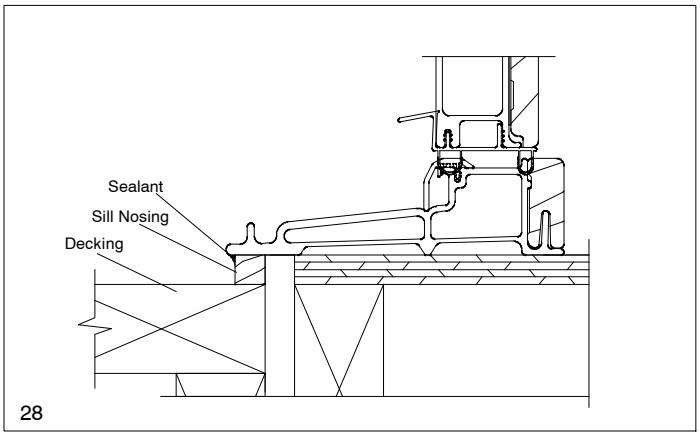

28

FINAL SEALING PROCEDURES

40. After exterior finish or siding is installed, apply sealant[1] around the exterior perimeter of the unit frame or casing. As needed, insert backing material between the frame or casing and the structure to provide a proper sealant joint. Sealant depth must be equal to width between unit and exterior finish material (brick and masonry apply). Always refer to the manufacturer's recommendations for proper surface preparation and application. See illustration 29.

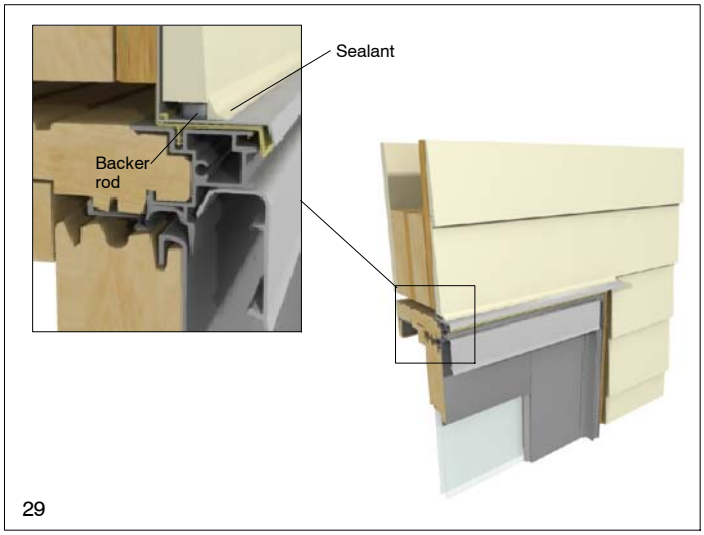

29

IMPORTANT: Using improper sealant could result in sealant failure causing air and water infiltration.

41. Fill gaps between the door frame and framing members on interior with insulation. Do not pack tightly.

NOTE: Expanding foam type insulation may be used to form an infiltration seal as required by some building codes. However, a low expansion type foam should be used in combination with fiberglass insulation.

CAUTION: When using expanding foam insulation it is very important not to bow the head jamb and/or side jambs of the unit.

42. Apply interior casing as desired. Finish the interior wood surfaces as soon as possible. Follow enclosed general paint/stain instructions and manufacturer's recommendations to ensure proper adhesion and performance.

IMPORTANT: Integrity windows and doors may be harmed by excess construction moisture. Ventilate building during high moisture phases or seal interior of the opening with plastic.

HANDLE OPERATION

NOTE: The door handle performs two separate functions. Rotating the handle upward, engages the multipoint lock (at the top, bottom and side jamb). Rotating the handle in a downward motion releases the latch and also the multipoint lock if engaged. The thumb turn is used to lock the handle to prevent it from being rotated down. The thumb turn does not engage the multipoint lock.

Locking the Door

43. Close door so it latches.
44. Rotate handle up to engage the shoot bolts and deadbolt on the multipoint lock.
45. Turn "thumb turn" counter-clockwise 1/4 turn to lock the handle. See figure 30.
46. Verify that the handle cannot be rotated down to ensure door is properly locked.

Figure 30: Locking the door

Unlocking the Door

47. Turn the thumb turn 1/4 turn clockwise.
48. Rotate the handle down to disengage the multipoint lock and latch mechanism. See illustration 31.

Figure 31: Unlocking the door

HINGE ADJUSTMENT PROCEDURES

NOTE: Should you find it necessary to make minor adjustments to your Integrity Inswing French door after it has been permanently installed, the adjustable hinge system will allow you to do this. During installation, adjustment of door frame shims should be done to correct any alignment or operation problems.

IMPORTANT: Ensure that the unit has been installed square in the opening. Adjustable hinges are not intended to compensate for an improperly installed unit**.**

CAUTION: Failure to follow adjustment procedures as outlined may damage hinge. To avoid damage, use ONLY the tool provided with the installation kit (fig 32b).

1. Adjustments should only be made when panel misalignment is visible or it causes poor operation of the door/lock. **Make any adjustments in small increments (one rotation per hinge), starting with the bottom hinge and working up to the top hinge. Repeat the process as necessary adjusting one rotation at a time.** Check results, readjust or proceed as required. Each hinge has a vertical and horizontal adjustment screw.

2. Check panel clearance at the sill (figure 32a). The panel should have minimum of 3/16″ (5) clearance at the bottom. The vertical adjustment screw (figure 32b) should be adjusted equal amounts starting with the bottom hinge. **Make any adjustments in small increments (one rotation per hinge), starting with the bottom hinge and working up to the top hinge. Repeat the process as necessary adjusting one rotation at a time.** Check index mark on hinge leaf (horizontal adjustment screw) and adjustment leaf edge to determine amount and direction of panel movement.

3. Check panel alignment with locking jamb (figure 32c) panel should have 3/16″ (5) clearance along the jamb. Rotate the horizontal adjustment screw (fig 32b) clockwise to increase, counterclockwise to decrease jamb to panel clearance. i.e. If increasing clearance at the top, the bottom hinge may have to be adjusted to decrease clearance and avoid hinge binding.

4. After panel alignment is corrected, recheck latch and deadbolt operation.

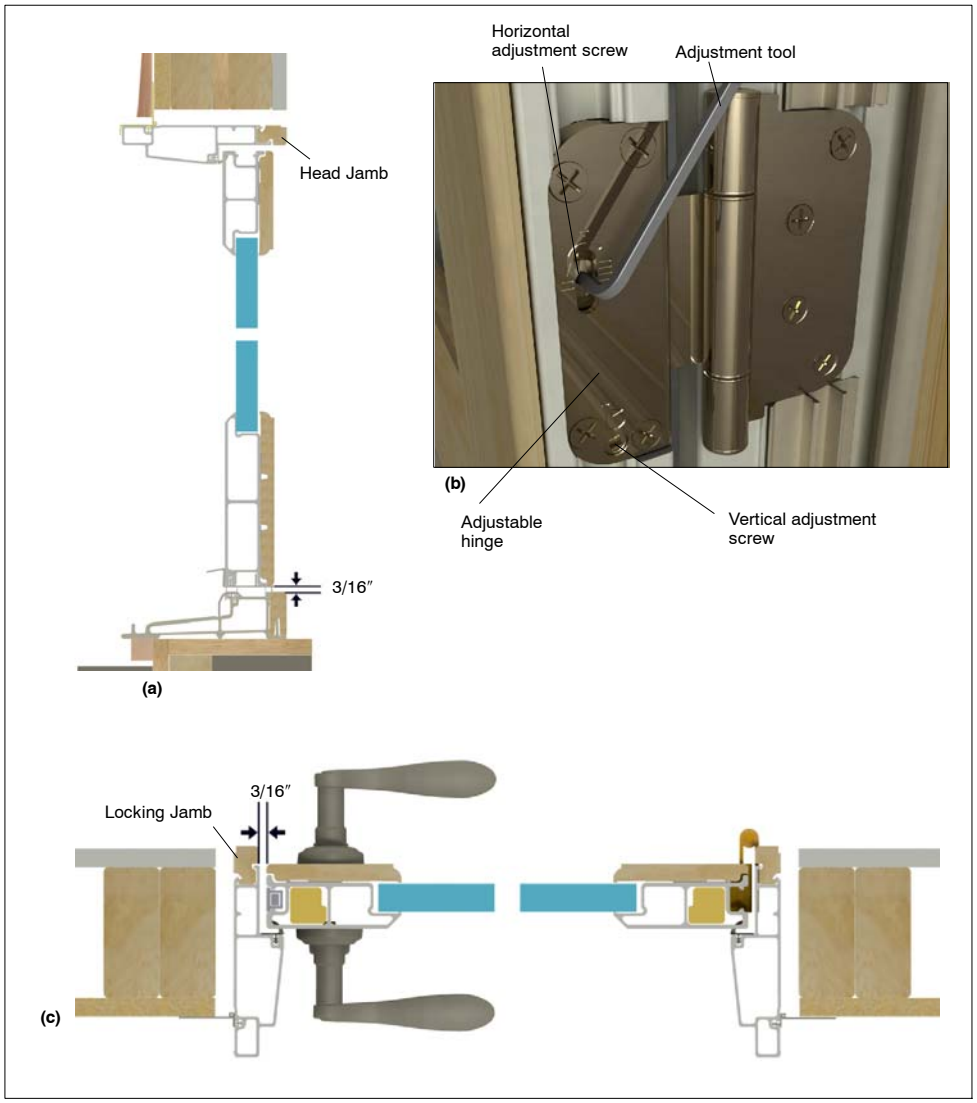

Figure 32: Panel adjustment