INTEGRITY INSWING/OUTSWING DOOR

# Mullion Kit Instructions

Integrity from MARVIN Windows and Doors

## BEFORE YOU BEGIN

**IMPORTANT:** Read these instructions thoroughly before beginning to assemble any multiple Integrity units. Failure to assemble as recommended will void any warranty, written or implied. Refer to specific product installation instructions for proper installation methods.

*NOTE: When specifying or considering the structural load requirements for windows and doors, it is important to consider the method of fastening the unit(s) together in addition to the method of fastening multiple assemblies into an opening. The methods contained herein may not be appropriate for all performance requirements. Selection of the appropriate fastening method(s) is the sole responsibility of the installer, contractor, structural engineer, architect, building owner and/or installer.*

Inswing and Outswing door multiple assemblies can be factory ordered with a single or multiple wide transom, 7336 Round Top, or 7318 elliptical Round Top above two panel doors as long as an **R.O. height of 100 1/2″ (2553)** is not exceeded.

Assemblies exceeding these limitations must be field mulled and must be assembled using a structural mullion kit designed specifically for Integrity multiple assemblies. Contact your Integrity dealer for additional information.

The construction adhesive called for in the Round Top over inswing door instructions should meet AFG–01 specifications, as established by the American Plywood Association.

**WARNING: Practice safety! Wear safety glasses or goggles and appropriate hearing protection when assembling multiple Integrity window and door products.**

## VERTICAL MULLING

### Parts Shipped With Mullion Kit –Vertical

| ILLUSTRATIONS (not to scale) | DESCRIPTION AND COLOR | PART/PROFILE NUMBER |
|---|---|---|
| 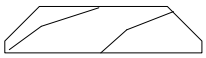 | W1241 Interior mull trim<br>71 1/2″ (1816)<br>120″ (3048) | <br>31501785<br>32249099 |
| | W7119 9/16″ Jamb Extension (for mulling direct glaze polygons above or beside inswing door)<br>72″ (1829)<br>84″ (2137) | <br>31504772<br>31504784 |
| 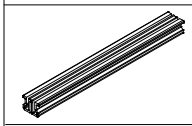 | Euro Groove Block<br>V1407 | 11860111 |
| | A330 Aluminum mulling pin<br>81 1/2″ (2070)<br>150″ (3810) | <br>15344468<br>11103250 |
| 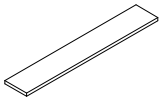 | Mull sealant foam tape – one sided<br>96″ (2438)<br>100′ (3017) | <br>11869508<br>11406224 |
| 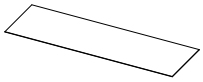 | 26 gauge 3 1/2″ x 16″ galvanized mulling tin – two sheets | 02070302 |
| 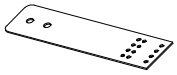 | Structural bracket<br>6″ (152)<br>10″ (154) | <br>11860014<br>11860009 |
| 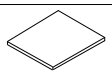 | Nailing fin connector | 10500213 |

### Parts Shipped With Mullion Kit –Vertical cont.

| ILLUSTRATIONS (not to scale) | DESCRIPTION AND COLOR | PART/PROFILE NUMBER |
|---|---|---|
| | Interior sill mull bracket | 11860145 |
| | #8 x 3/8″ Phillips pan head screws | 05050423 |
| | #8 x 1/2″ Phillips pan head screws | 11800532 |
| | #7 x 5/8″ Phillips flat head wood screw | 11800758 |

### YOU WILL NEED TO SUPPLY

| | |
|---|---|
| Safety glasses | Hearing protection |
| Phillips screwdriver | Scrap pieces of wood |
| Power drill | Clamps |
| 3/16″ drill bit | Hacksaw |
| 7/64″ drill bit | Silicone sealant w/gun |
| 16 gauge 1/2″ x 1/2″ staples w/gun | |

### INDEX


Page

IIFD Stationary Panel Removal . . . . . 2
Vertical Mulling . . . . . 3
Transom Mulling . . . . . 5
Multiple Wide Transom Mulling
(two wide OX, XO or XX mulled, OO mulled) . . . . . 7
Round Top over Inswing/Outswing Door . . . . . 9
Integrity Round Top by Marvin over Inswing/Outswing Door 11

## Stationary Panel Removal (IIFD only)

When mulling a stationary unit to an operator, it will be necessary to first remove the stationary panel from the frame and install the V1407 Euro Groove Block on the mull side stile of the panel.

1. To remove the stationary panel insert a stiff putty knife between the stationary panel and jamb toward the top of the panel as shown in illustration 1. Slide the knife down until it hits a stationary panel clip. Once the stationary clip is located, insert the knife between the clip and panel.

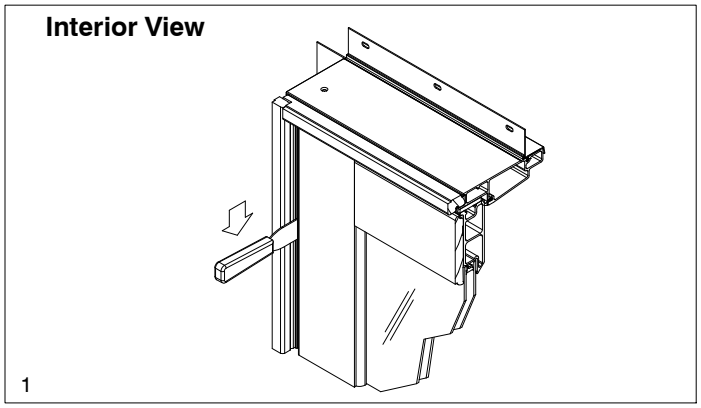


2. With the stiff putty knife in place, carefully pry the panel away from the frame using a pry bar as shown in illustration 2.

*NOTE: Panel cannot be completely removed until entire side of panel is released from the stationary panel clips.*

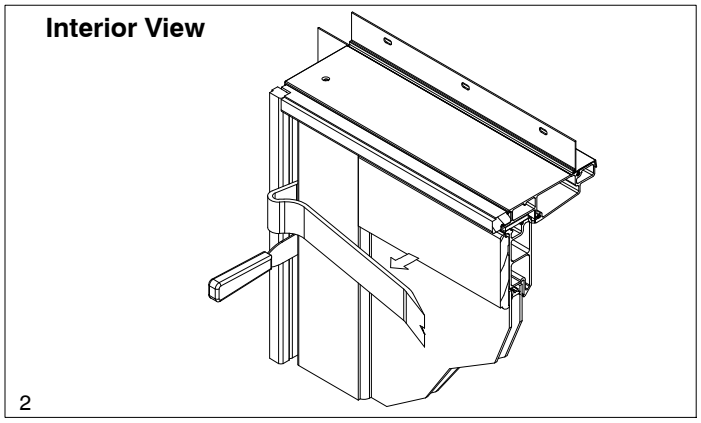


3. Keeping tension on the panel with the pry bar, locate the next stationary clip and release from panel. Repeat the above steps until panel has been released from all clips on one side (three clips per side). Once released, remove panel and set aside.
4. Drive a #8 x 1/2″ pan head screw into the mull side stile 31 1/2″ (800) from the bottom of the panel drip as shown in illustration 3.

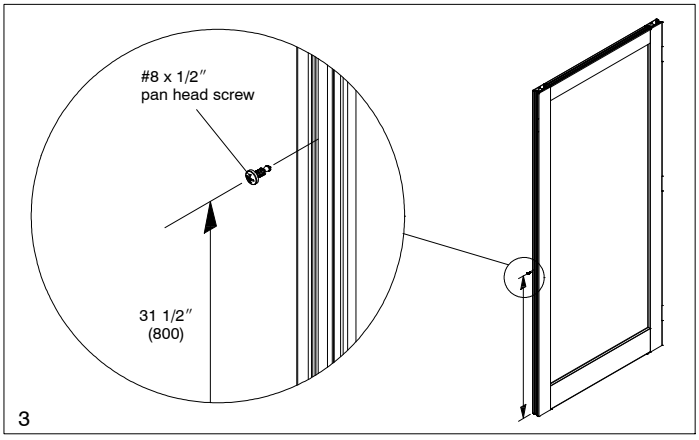


5. Slide the Euro Groove Block into the stile at the top of the panel as shown in illustration 4.

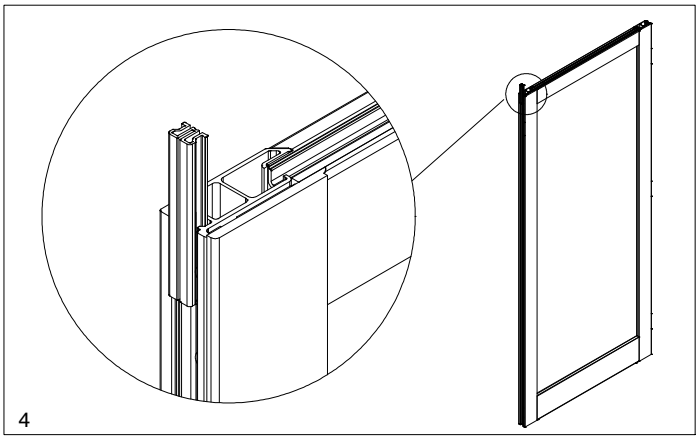


6. Replace the stationary panel from the interior, set replacement stationary panel on sill and tip into frame as shown in illustration 5. Make sure all stationary clips have engaged Ultrex stiles of stationary panel.

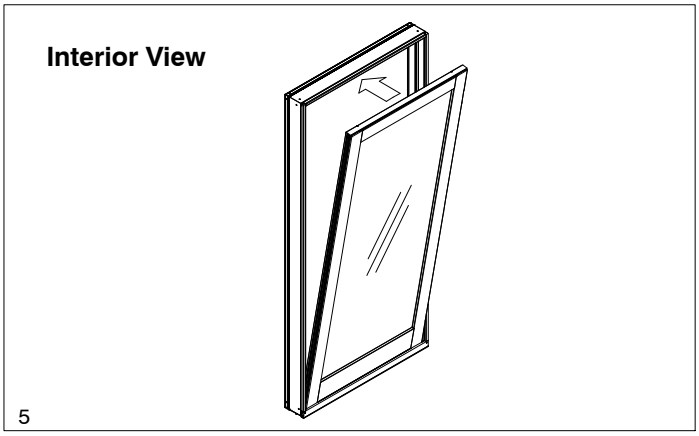

## Mulling Procedures – Vertical

7. Carefully lay units on a flat surface in the desired mulling configuration (interior facing up). Remove nailing fin from side jambs that will be mulled together. Apply mull sealant foam tape the entire length of one jamb to be mulled ensuring it is located 1/4″ (6) from the exterior edge of the Ultrex frame. See illustration 6.

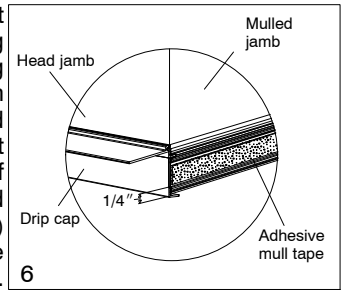


8. Position units together in desired mulling configuration. Check to be sure that frames at both sides of mullion are flush and nailing fin/drip cap kerfs are aligned. Lightly clamp units together on interior (use wood scraps to protect interior) near each end to hold units in place.

9. Drill outer edges of nailing fin/drip cap kerfs at head jamb mullion with a 3/16″ (5) drill bit as shown in illustration 7. Clean filings from the drilled area to ensure easy installation of mull pin.

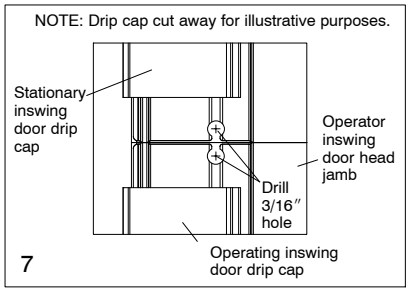


10. Drive mull pin in the full length of the jamb (use hammer if necessary) ensuring that the mull pin is recessed 1/4″ (6) to allow for sealant application later. See illustration 8.

11. Check to make sure that units are flush and square with each other. Apply a third clamp to interior if necessary and fasten units together at interior jamb liners with 1/2″ x 1/2″ 16 gauge staples spaced every 5″ (127). See illustration 8.

12. Center mulling tin over mullion at head jamb and flush with recess in wood head jamb liner. Secure tin to head jamb with 1/2″ x 1/2″ 16 gauge staples as shown in illustration 3. On Inswing units, drill pilot holes through mulling tin and first layer of Ultrex with a 7/64″(3) drill bit at locations shown in illustration 8. Fasten mulling tin to head jamb with #8 x 3/8″ Phillips pan head screws provided.

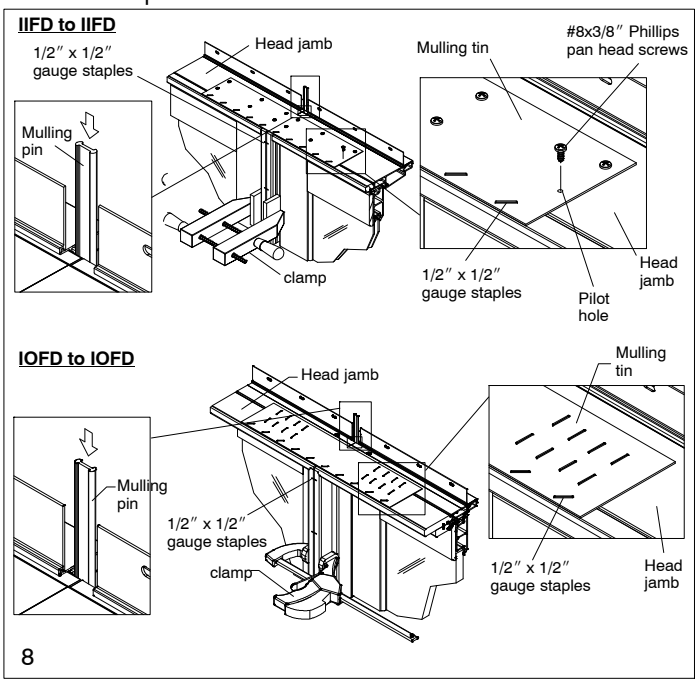


13. **If mulling a direct glaze polygon beside an inswing door, skip to step 14.** Remove the #8 x 1″ Phillips pan head screws from the interior side of sill on each unit. Align holes on interior sill mull bracket and reattach with screws removed previously. See illustration 9. **Skip to step 15.**

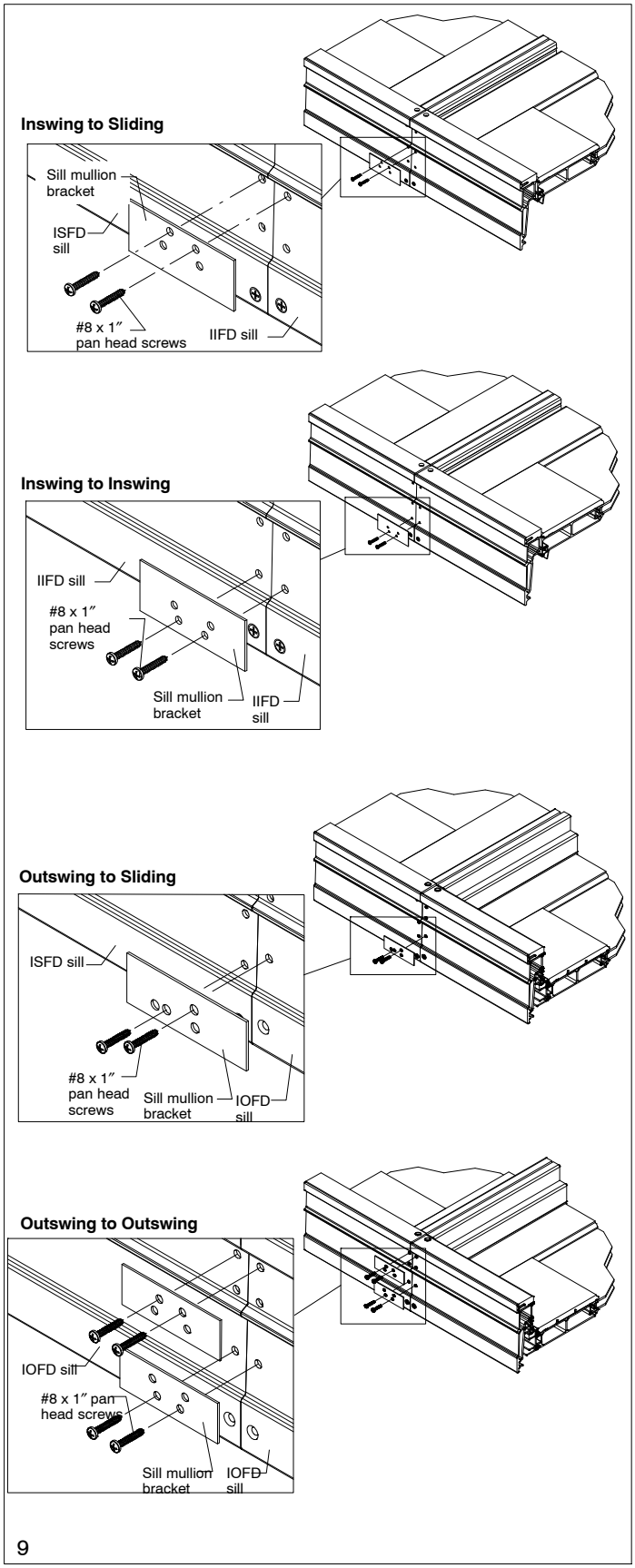

14. If mulling a direct glaze polygon beside an inswing door, install structural brackets on both sides of the head jamb mullion and on the polygon side of the sill mullion. Measure and mark 1 1/4″ (32) from nailing fin extended on head jamb of inswing door. Attach bracket with one #7 x 5/8″ Phillips flat head wood screw. Attach structural bracket to sill and head jamb of polygon with two #7 x 5/8″ wood screws. See illustration 10.

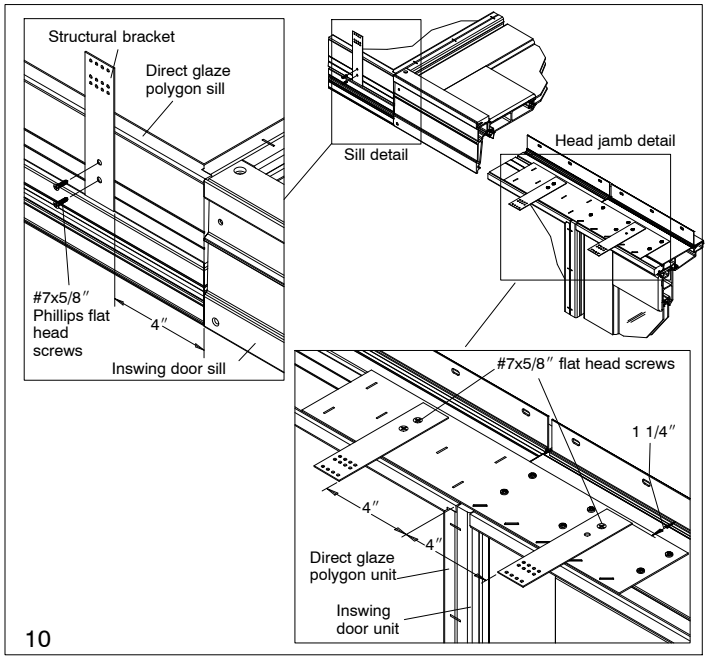

10

15. Apply silicone sealant at both mullion joints from the frame exterior edge to the drip cap/nailing fin kerf and across the kerf over the mulling pin as shown in illustration 11. Apply nailing fin connector by removing the paper backing from the connector and pressing into place. See illustration 11.

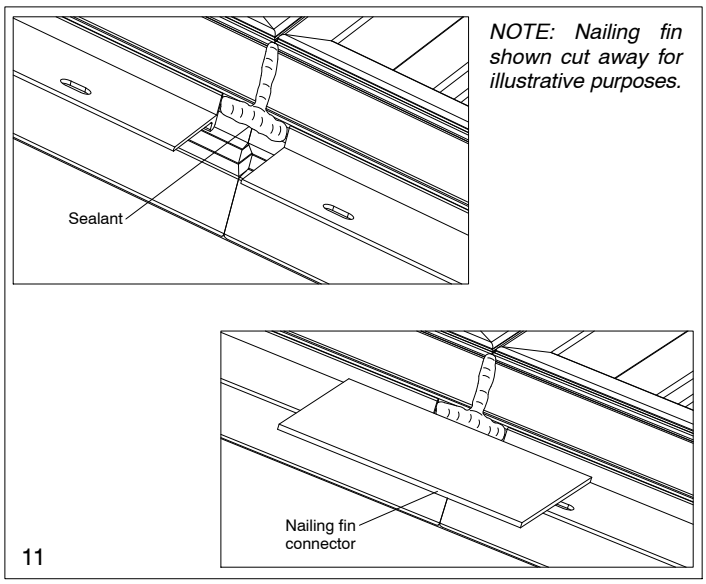

11

16. If applicable, jamb extensions can now be installed. Follow installation instructions for installing unit into rough or masonry opening. Interior mull trim should be applied after unit is completely installed and interior trim is applied.

*NOTE: For mulling polygon units to inswing door units with 6 9/16″ jamb extension W7119 jamb extension is supplied. Refer to installation instructions for jamb extension application.*

## TRANSOM MULLING

| Standard Parts shipped with Mullion Kit – Transom | | |
|---|---|---|
| **ILLUSTRATIONS (not to scale)** | **DESCRIPTION AND COLOR** | **PART/PROFILE NUMBER** |
| | W1241 Interior mull trim<br>120″ (3048) | 32249099 |
| | W7119 9/16″ Jamb Extension (for mulling direct glaze polygons above or beside inswing door)<br>72″ (1829)<br>84″ (2137) | 31504772<br>31504784 |
| | A330 aluminum mulling pin<br>81 1/2″ (2070)<br>150″ (3810) | 15344468<br>11103250 |
| | Mull sealant foam tape–one side adhesive<br>96″ (2438)<br>150′ (45,720) | 11869508<br>10500021 |
| | Nailing fin connector | 10500213 |
| | 26 gauge galvanized mulling tin | 02070302 |
| | #8 x 3/8″ Phillips pan head screws | 05050423 |
| | #7 x 5/8″ Phillips flat head wood screw | 11708421 |

**YOU WILL NEED TO SUPPLY**

- Safety glasses
- #2 Phillips screwdriver
- Power drill
- 3/16″ drill bit
- Silicone sealant w/gun
- 16 gauge 1/2″ x 1/2″ staples w/gun
- Hearing protection
- Scrap pieces of wood
- 7/64″ drill bit
- Clamps

## For Inswing Doors with Sliding Screens Only:

**IMPORTANT:** Secure the Integrity inswing door in a rigid standing position before attempting to remove screen door track.

If equipped, it will be necessary to remove the sliding screen door track assembly at this time. Slide screen roller bar to one side and remove the Phillips flat head screws located in screen track. Move roller bar to the opposite side and remove remaining screws securing screen track. See illustration 12.

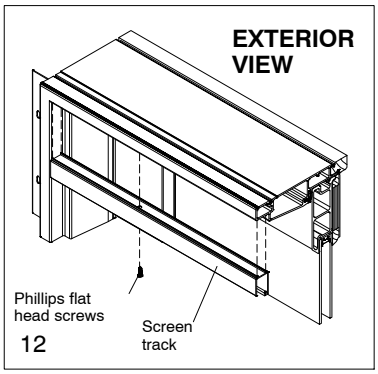

12

1. If applicable, remove nailing fin/drip cap from head jamb of door and sill of transom. Apply one sided mull sealant foam tape to the entire length of door head jamb ensuring it is located 1/4″ (6) from the exterior edge of the Ultrex frame. See illustration 13.

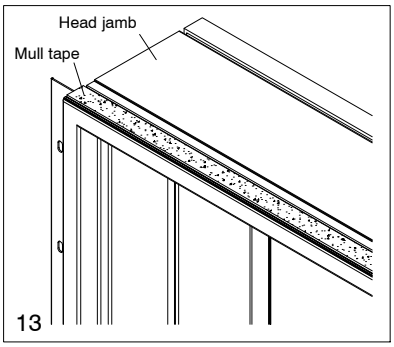

13

*NOTE: For mulling polygon units to inswing door units with 6 9/16″ jambs W7119 jamb extension is supplied. Refer to installation instructions for jamb extension application.*

2. Position rectangular transom on the head jamb of door. Check to be sure that both ends of the transom sill are flush with door head jamb Apply clamps to interior side at each end of head jamb and sill to prevent movement. Use scrap pieces of wood to prevent marring of wood surface. Make sure that nailing fin/drip cap kerfs line up on both ends. See illustration 14. Drill the outer edges of mull kerf located at one side at head jamb of door and sill of transom with a 3/16″ (5) drill bit as shown in illustration 14. This will allow easy application of mulling pin. Be sure to clean filings from the drilled area prior to mull pin installation.
3. Drive mull pin in the full length of sill/head jamb (use hammer if necessary) ensuring it is recessed 1/4″ (6) to allow for sealant application later. See illustration 14.

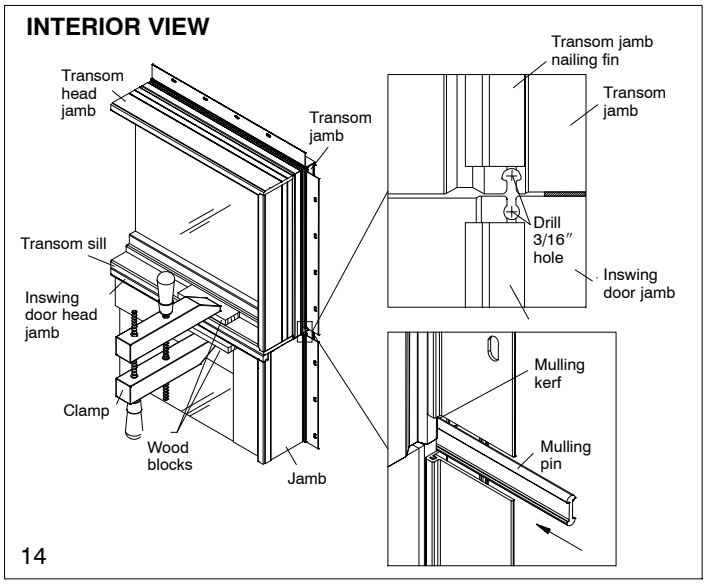

14

4. Apply third clamp if necessary and fasten interior wood members with 1/2″ x 1/2″ 16 gauge staples spaced every 5″ (127). See illustration 15.

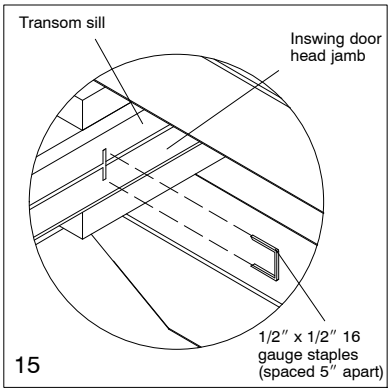

15

5. Center mulling tin over mullion and secure with 1/2″ x 1/2″ 16 gauge staples as shown in illustration 16.
6. On Inswing units, drill three pilot holes 3 1/8″ (79) in from exterior face on each side of the door unit through mulling tin into the Ultrex jamb using a 7/64″ (3) drill bit. See illustration 16. Make sure not to drill past the first thickness of Ultrex. Secure with #8 x 3/8″ screws provided.
7. Attach structural masonry brackets 2″ above mullion with two #7 x 5/8″ flat head wood screws. See illustration 16.

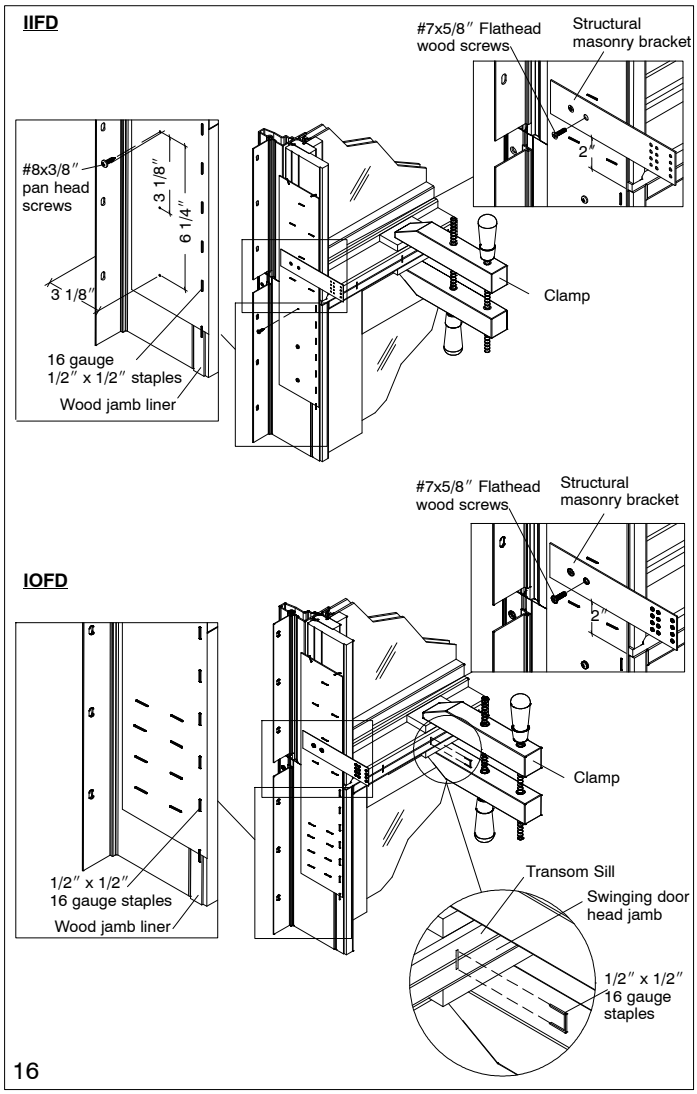

16

8. Remove clamps from the unit. Reapply screen track assembly if removed earlier.
9. Apply silicone sealant at both mullion joints from the frame exterior edge to the drip cap/nailing fin kerf and across the kerf over the mulling pin as shown in illustration 17. Apply nailing fin connector by removing the paper backing from the connector and pressing into place. See illustration 17.

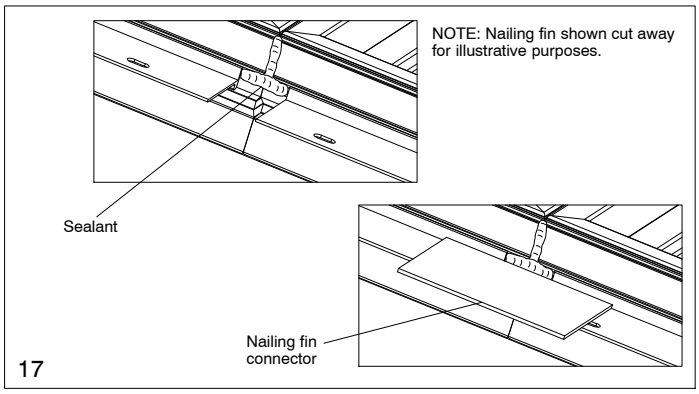

17

10. Follow installation instructions for installing unit into rough or masonry opening. Interior mull trim should be applied after unit is completely installed and interior trim is applied.

## MULTIPLE WIDE TRANSOM OVER SWINGING DOOR

**Parts Shipped With Mullion Kit – Multiple Wide Transom over Inswing Door**

| ILLUSTRATIONS (not to scale) | DESCRIPTION AND COLOR | PART/PROFILE NUMBER |
|---|---|---|
| | W1241 Interior mull trim<br>71 1/2″ (1816)<br>120″ (3048) | <br>31501785<br>32249099 |
| | A330 aluminum mulling pin<br>71 1/2″ (1816)<br>150″ (3810) | <br>15344273<br>11103250 |
| | Mull sealant foam tape – one sided adhesive<br>96″ (2438)<br>150′ (46 meters) | <br>11869508<br>10500021 |
| | Steel mull tie | 11040358 |
| | Structural bracket<br>6″<br>10″ | <br>11860014<br>11860009 |
| | Nailing fin connector | 10500213 |
| | #8 x 3/8″ Phillips pan head screws | 05050423 |
| | #7 x 5/8″ Phillips flat head wood screw | 11708421 |

**YOU WILL NEED TO SUPPLY**

| | |
|---|---|
| Safety glasses | Hearing protection |
| Phillips screwdriver | Scrap pieces of wood |
| Power drill | 7/64″ drill bit |
| 3/16″ drill bit | Hacksaw |
| Clamps | Silicone sealant w/gun |
| 16 gauge 1/2″ x 1/2″ staples w/gun | |

## Mulling Procedures – Multiple Wide Direct Glaze Transom over Inswing Door

1. Lay the transom frames on a flat surface in the desired mulling configuration (interior facing up). Remove nailing fin from sill and side jambs that will be mulled together. Apply mull sealant foam tape along the entire length of one jamb to be mulled ensuring it is located 1/4″ (6) from the exterior edge of the Ultrex frame. See illustration 18.

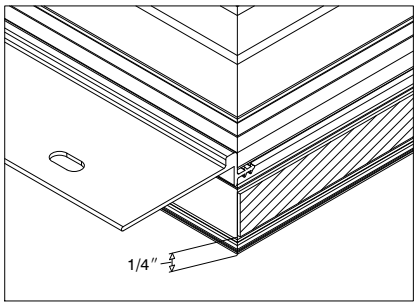


18

2. Position units together in the desired configuration. Check to be sure that the frames at both ends of the mullion are flush and the nailing fin kerfs are aligned. Lightly clamp units together on interior near each end to hold mulled units in place (use wood blocks to protect interior). See illustration 19.

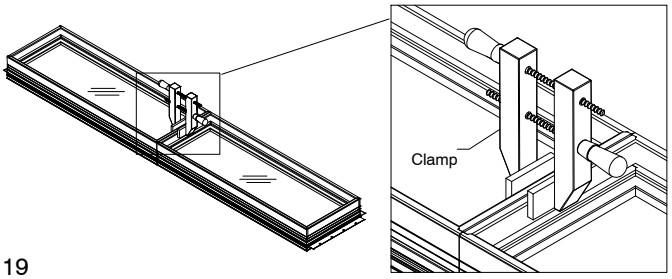


19

3. Drill out the outer edges of the nailing fin/drip cap kerf at the mullion with a 3/16″ drill bit as shown in illustration 20. Clean filings from drilled area to ensure easy installation of the mull pin. Insert mull pin the full length of the mullion ensuring that it is recessed 1/4″ to allow for sealant and horizontal mull pin application later. If necessary drive the mull pin with a hammer. See illustration 20.

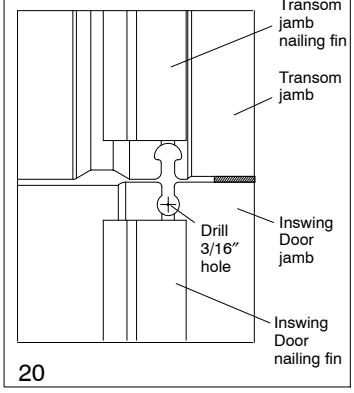


20

4. Make sure mulled units are flush and square at sill and jamb liners. Fasten interior of mulled units with 1/2″ x 1″ 16 gauge staples spaced every 5″ (127). See illustration 21.

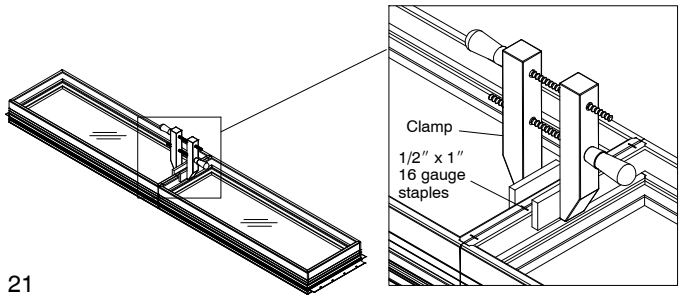

21

5. Install steel mullion tie across head jambs and fasten with two #7 x 5/8″ Phillips flat head wood screws into each unit. Install structural brackets 4″ (102) from mullion and attach with one #7 x 5/8″ Phillips head screw as shown in illustration 22.

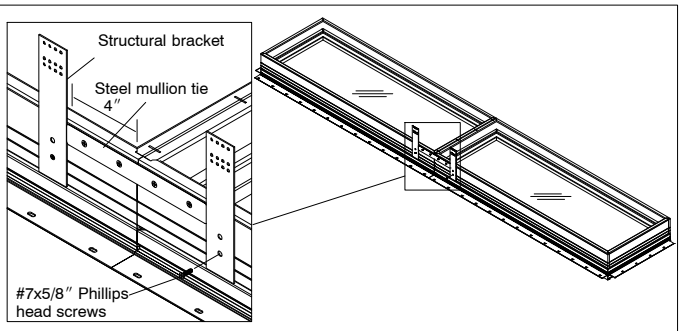

22

6. Apply silicone sealant at the head jamb mullion joint from the frame exterior edge to the drip cap/nailing fin kerf and across the kerf over the mulling pin as shown in illustration 23. Apply nailing fin connector by removing the paper backing from the connector and pressing into place. See illustration 23.

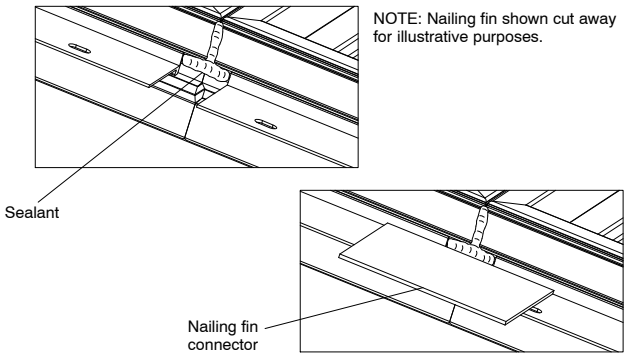

23

7. Follow preceding instructions on mulling a single transom over an Integrity Swinging french door.

## ROUND TOP/ELLIPTICAL OVER SWINGING DOOR

| Parts Shipped With Mullion Kit – Round Top/Elliptical over Inswing Door | | |
|---|---|---|
| **ILLUSTRATIONS (not to scale)** | **DESCRIPTION AND COLOR** | **PART/PROFILE NUMBER** |
| | W1241 Interior Mull Trim<br>71 1/2″ (1816)<br>120″ (3048) | <br>31501785<br>32249099 |
| | V803 Connecting barb fastener<br>96″ (2438) | <br>15812008 |
| | Mull sealant foam tape – two sided adhesive<br>96″ (2438)<br>150′ (46 meters) | <br>11406227<br>11406226 |
| | 26 gauge 3 1/2″ x 16″ galvanized mulling tin – two sheets | 02070302 |
| | Structural Bracket<br>6″ (1816)<br>10″ (3810) | <br>11860014<br>11860009 |
| | Nailing fin connector | 10500213 |
| | #8 x 3/8″ Phillips pan head screws | 05050423 |
| | #7 x 5/8″ Phillips flat head wood screw | 11800758 |

**YOU WILL NEED TO SUPPLY**

| | |
|---|---|
| Safety glasses | Hearing protection |
| Phillips screwdriver | Scrap pieces of wood |
| Power drill | 7/64″ drill bit |
| Clamps | Silicone sealant w/gun |
| 16 gauge 1/2″ x 1/2″ staples w/gun | |

## For Inswing Doors with Sliding Screens Only

**IMPORTANT:** Secure the Integrity inswing door in a rigid standing position before attempting to remove screen door track.

If equipped, it will be necessary to remove the sliding screen door track assembly at this time. Slide screen roller bar to one side and remove the Phillips flat head screws located in screen track. Move roller bar to the opposite side and remove remaining screws securing screen track. See illustration 24.

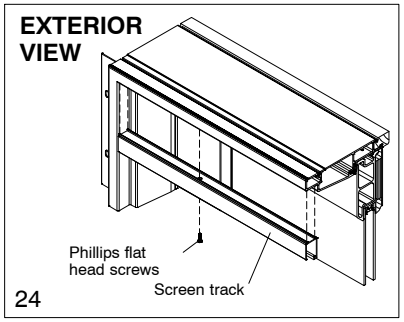

24

1. Remove shipping blocks from sill of Round Top unit as shown in illustration 25.

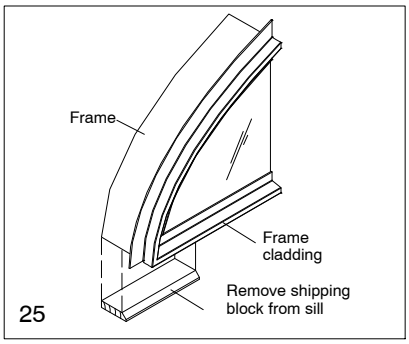

25

2. Lay the Round Top unit on a flat surface. Insert connecting barb fastener into the kerf along the entire length of sill. Apply a 1/8″ (3) bead of APA rated AFG –01 spec. (or equivalent) sealant/adhesive to exterior side of connecting barb fastener the full length of the sill. See illustration 26.

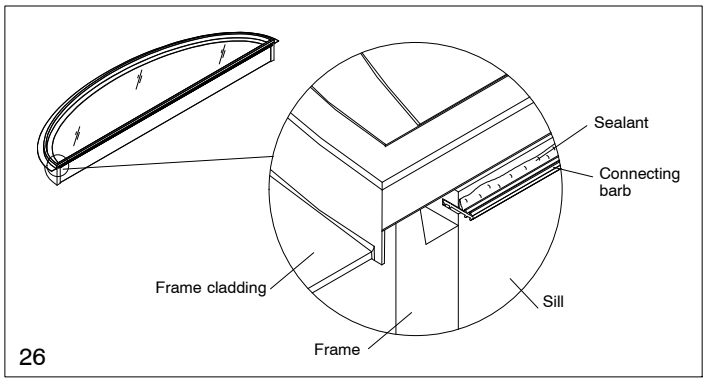

26

3. If applicable, remove nailing fin/drip cap from head jamb of door. Apply mull sealant foam tape the entire length of door head jamb ensuring it is located 1/4″ (6) from the exterior edge of the Ultrex frame. Allow approximately 1 1/2″ (38) excess to wrap around each jamb. Do not remove paper backing from mull tape at this time. See illustration 27.

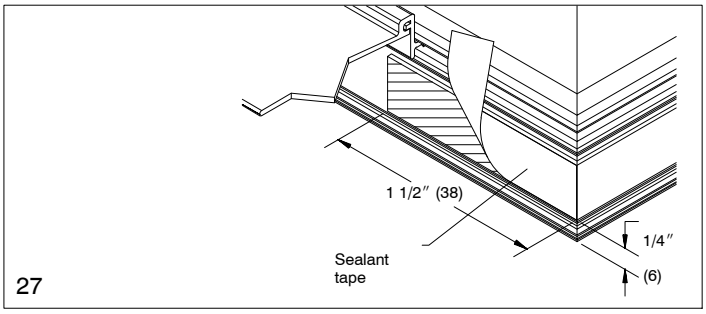

27

**CAUTION: When positioning the Round Top onto the inswing door it will be necessary to have the assistance of another individual.**

4. Position connecting barb fastener on the Round Top unit so that it lines up with nailing fin/drip cap kerf on head jamb of door. Make sure that both ends of Round Top sill and inswing door head jamb are flush.

5. Apply clamps at each end of interior side of door head jamb and Round Top sill to prevent movement. Use scrap pieces of wood to prevent marring of wood surfaces. See illustration 28.

**IMPORTANT:** Read the following before proceeding to next step. Use extreme caution when exerting pressure on clamps as damage may result to Ultrex.

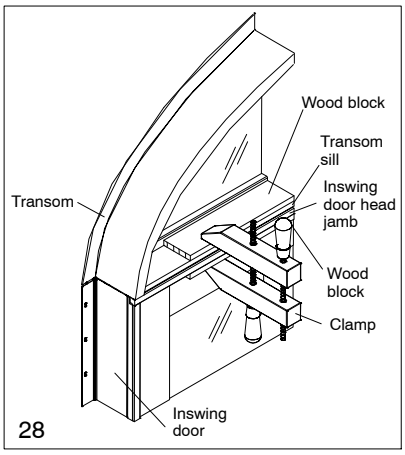

28

6. Carefully remove paper backing from the mull sealant foam tape. Use wood blocks and apply a third clamp on the exterior side of the unit. Start at one end, clamp at 2″ (51) intervals until completely across the unit.

7. Remove clamp from exterior and reposition to interior along Round Top sill and door head jamb. Fasten interior of mulled units with 1/2″ x 1/2″ 16 gauge staples spaced every 5″ (127). See illustration 29.

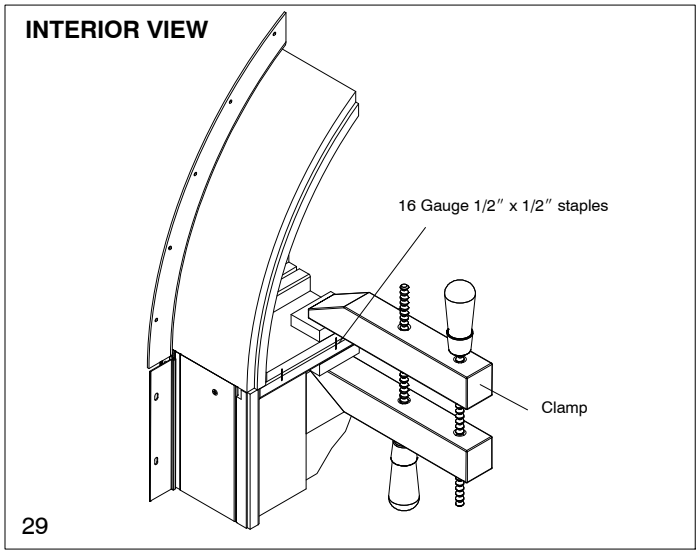

29

8. Apply mulling tin to the Round Top and inswing door jambs, secure with 1/2″ x 1/2″ 16 gauge staples as shown in illustration 30.

9. On Inswing units, drill three pilot holes 3 1/8″ (79) in from exterior face on each side of the door unit through mulling tin into the Ultrex jamb using a 7/64″ (3) drill bit. See illustration 30. Make sure not to drill past the first thickness of Ultrex. Secure with #8 x 3/8″ Phillips pan head screws provided.

10. Attach structural brackets 2″ above mullion with two #7 x 5/8″ flat head wood screws. See illustration 30.

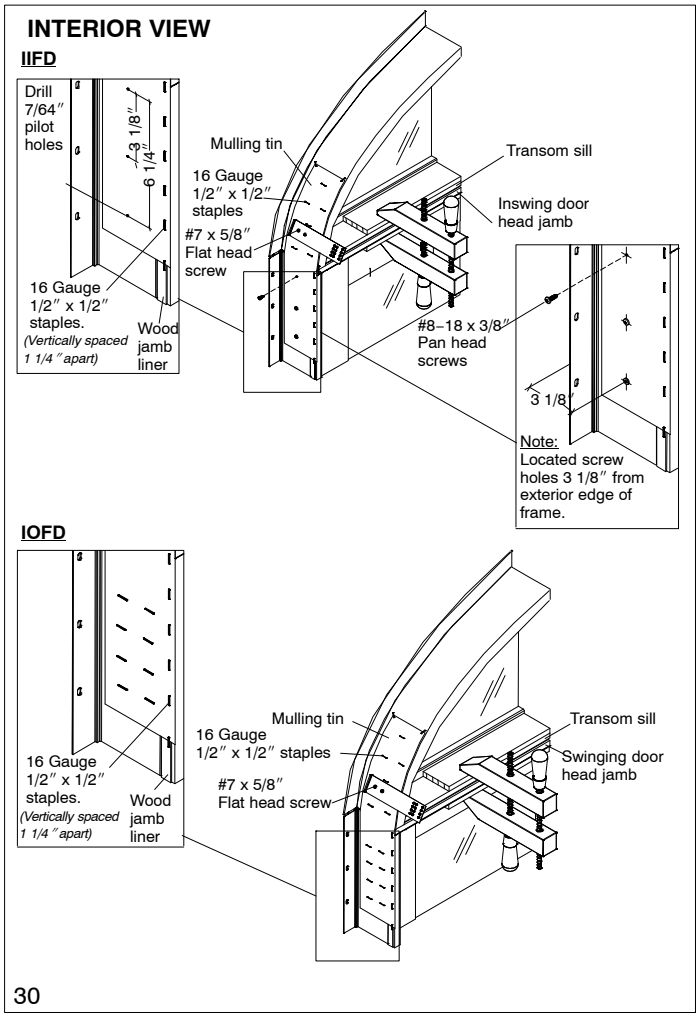

30

11. Apply sealant on exterior over and into mullion joint from exterior edge of mulling tin to exterior surface of the jamb. See illustration 31.

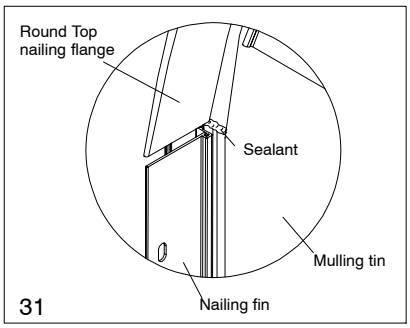

31

12. Apply nailing fin connectors to exterior as shown in illustration 32.

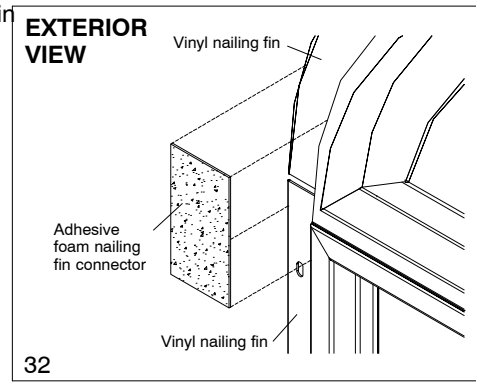

32

13. Follow installation instructions for installing unit into rough or masonry opening. Interior mull trim should be applied after unit is installed and interior trim is applied.

## INTEGRITY ROUND TOP by MARVIN OVER INTEGRITY SWINGING DOOR

**Parts Shipped With Mullion Kit – Round Top/Elliptical over Inswing Door**

| ILLUSTRATIONS (not to scale) | DESCRIPTION AND COLOR | PART/PROFILE NUMBER |
|---|---|---|
| | A330 Al Mulling Pin<br>81 1/2″ (2070) | 15344273 |
| | Mull tape<br>– one side adhesive<br>96″ (2438) | 11869508 |
| | 2–Nailing fin connectors | 10500213 |
| | 2–Mulling tin<br>3 1/2″ x 16″ (64 x 406) | 02070302 |
| | 8 – #7 x 5/8″ Phillips flat head screws | 11800758 |
| | 6–#8 x 3/8″ Phillips pan head screws | 05050423 |
| | 4–Structural bracket<br>6″ (152)<br>10″ (254)<br>*Note: 10″ brackets are not part of the mull kit and must be ordered separately for 6 9/16″ jambs.* | 11860014<br>11860009 |
| | W1242 Interior mull trim for 4 9/16″<br>or<br>W1241 Interior mull trim for 6 9/16″ | 31501296<br><br>31501396 |
| | W7431 2–12″ Mull filler blocks for 4 9/16″ jambs<br>or<br>W8430 Horizontal mull filler for 6 9/16″ jambs | 31500006<br><br>31808058 |

**YOU WILL NEED TO SUPPLY**

| | |
|---|---|
| Safety glasses | Staple gun |
| 16 gauge 1/2″ x 1/2″staples | #2 Phillips screwdriver |
| Power drill | Hearing Protection |
| 3/16″ drill bit | 7/16″ drill bit |
| Silicone sealant w/gun | Clamps |
| 16 gauge 1/2″ x 1/2″ | Scrap pieces of wood |

## Mulling Procedures

1. Lay frames on a flat surface in the desired mulling configuration (interior side up). Remove nailing fin from head jamb of inswing door. Remove shipping blocks from sill of IRTM. Attach additional mull filler blocks to the IRTM 4 9/16″ sill as needed, flush to the interior, with 3/16″ x 1″ staples. See illustration 33.

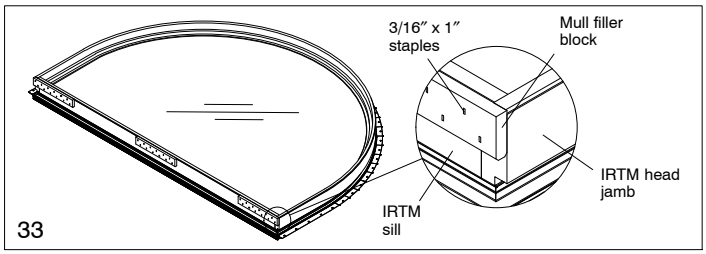

33

*NOTE: For mulling IRTM units to inswing door units with 6 9/16″ jambs W8430 jamb extension is supplied. Remove shipping blocks and trim jamb as shown in illustration 34. Cut horizontal mull filler to length and apply with 3/16″ staples as shown in illustration 34.*

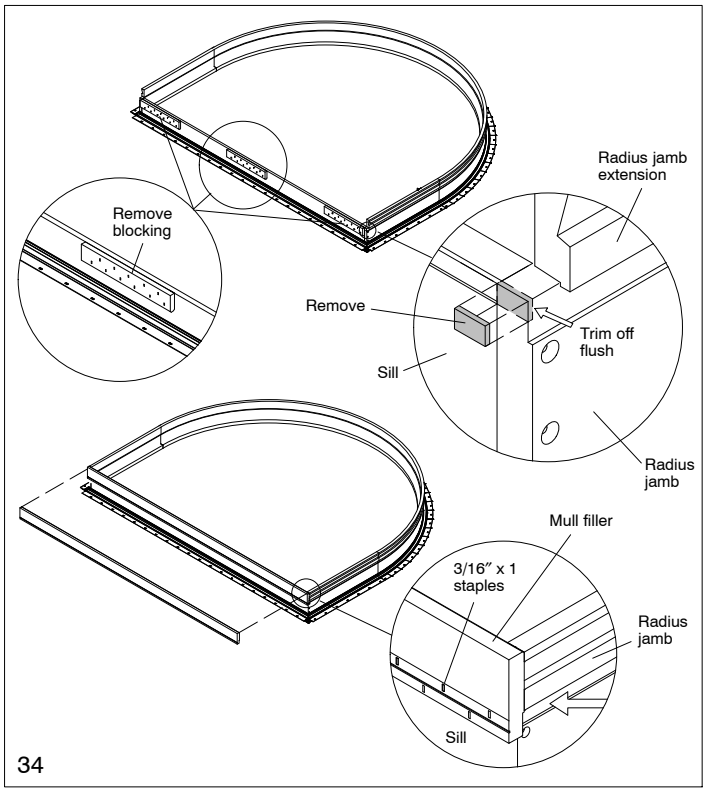

34

2. Apply one sided mull tape the entire length of door head jamb ensuring it is located 1/4″ (6) from the exterior edge of the Ultrex frame. See illustration 35.

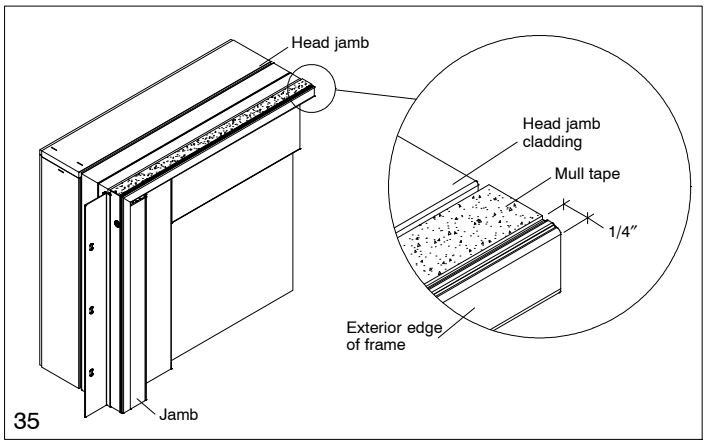

35

3. Position IRTM on the head jamb of door. Check to be sure that both ends of the IRTM sill are flush with door head jamb Apply clamps to interior side at each end of head jamb and sill to prevent movement. Use scrap pieces of wood to prevent marring of wood surface. Make sure that nailing fin/drip cap kerfs line up on both ends. See illustration 36.
4. Drill the outer edges of mull kerf located at one side at head jamb of door and sill of transom with a 3/16″ (5) drill bit as shown in illustration. This will allow easy application of mulling pin. Be sure to clean filings from the drilled area prior to mull pin installation. See illustration 36.

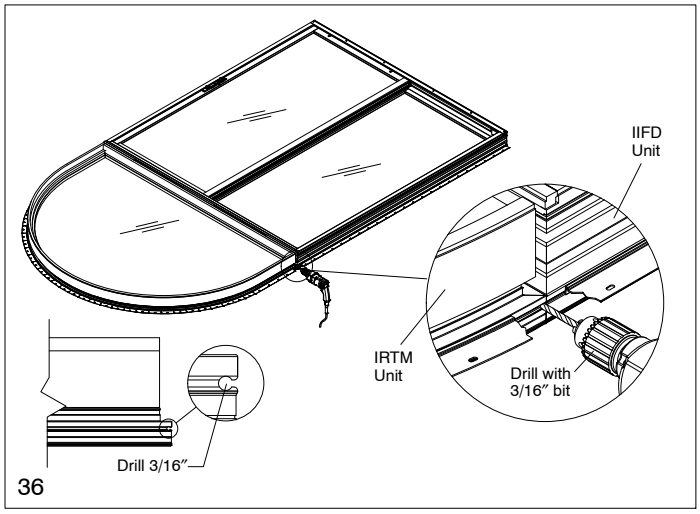

36

5. Cut the mulling pin 1/2″ shorter than the mull joint. Drive mull pin in the full length of sill/head jamb (use hammer if necessary) ensuring it is recessed 1/4″ (6) to allow for sealant application later. See illustration 37.

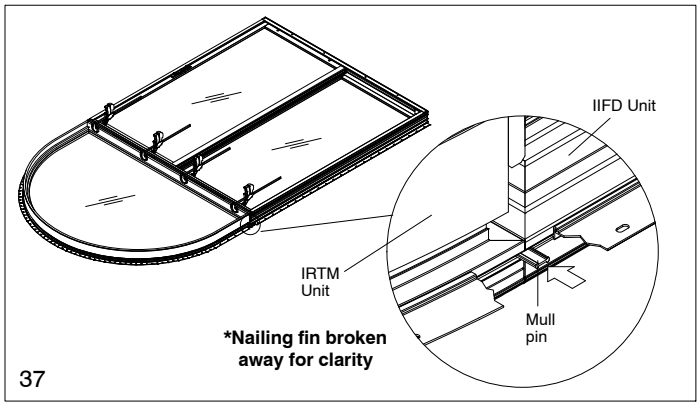

37

6. Apply additional clamps if necessary and fasten interior wood members with 1/2″ x 1/2″ 16 gauge staples spaced every 5″ (127). See illustration 38.

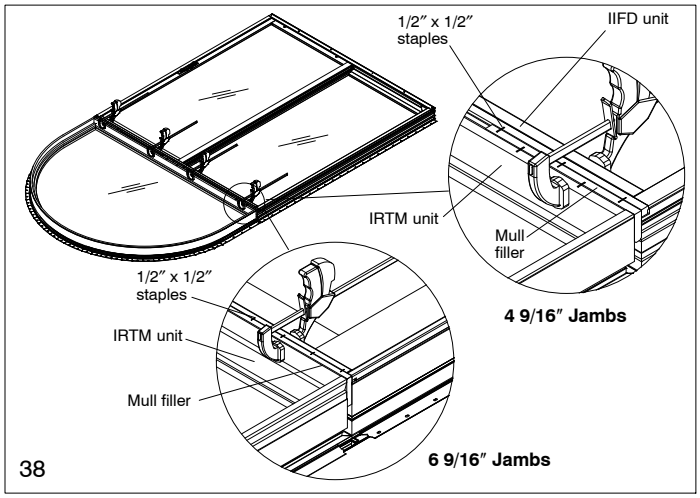

38

7. Center mulling tin over mullion and secure with 1/2″ x 1/2″ 16 gauge staples as shown in illustration 39.
8. On Inswing units, drill three pilot holes 3 1/8″ (79) in from exterior face on each side of the door unit through mulling tin into the Ultrex jamb using a 7/64″ (3) drill bit. See illustration 40. Make sure not to drill past the first thickness of Ultrex. Secure with #8 x 3/8″ screws provided.

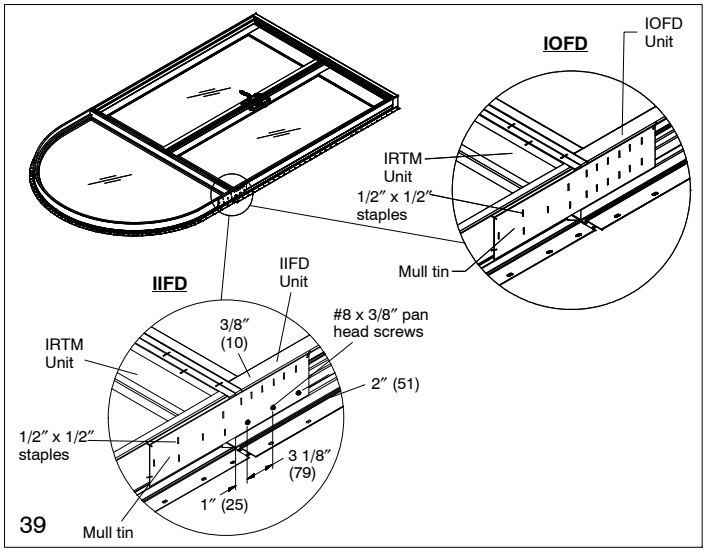

39

9. Attach two structural brackets on both sides of the unit with #7 x 5/8″ flat head wood screws; one on each side of the mull joint. See illustration 40.

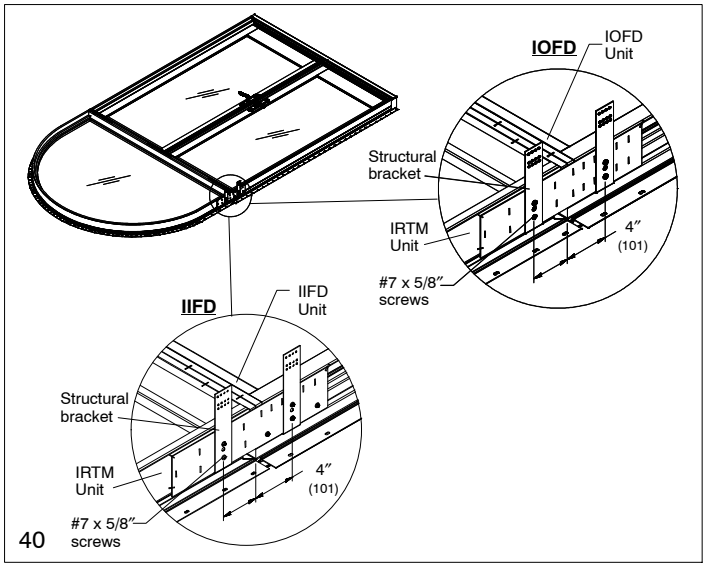

40

10. Apply sealant on exterior over and into mullion joint from exterior edge of mulling tin to exterior surface of the jamb. See illustration 41.

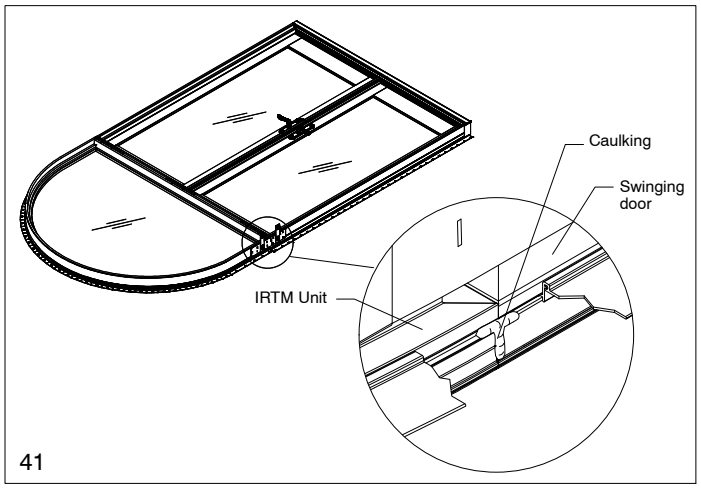


41

11. Apply nailing fin connectors to exterior as shown in illustration 42.

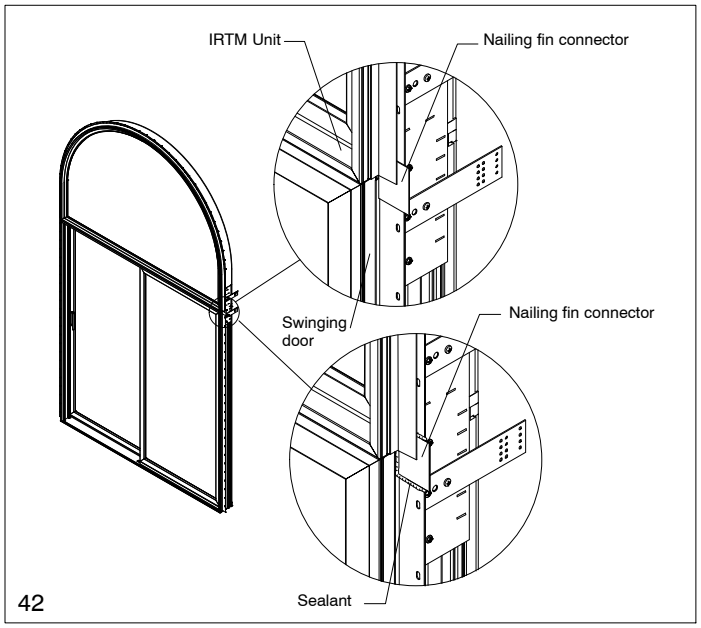


42

*NOTE: It is important that care be exercised when moving a mulled assembly from the mullion area to the rough opening.*

12. Follow installation instructions for installing unit into rough or masonry opening. Interior mull trim should be applied after installation of unit and interior trim has been completed.