Integrity All Ultrex Supplemental Instructions

Through Jamb Installation

ABSTRACT: The following instructions are intended to be used in conjunction with the supplied installation instructions for proper installation techniques including opening preparation, flashing and sealing details. Always read these and all instructions in their entirety before installing your Integrity product.

Tools and Supplies Needed

- Power Drill
- 3/16″ Drill Bit
- Phillips Head Screw Driver
- Construction Adhesive (APA rated AFG-01 spec.)
- Rubber Mallet
- Caulking Gun
- Stiff Putty Knife
- Tape Measure

ATTACH INSTALLATION BRACKETS

*NOTE: Casement/Awning units **do not** use jamb or head jamb brackets. Skip to step 3 for mulled units (or) step 1 on page 2 for non-mulled units.*

1. Install a bracket at every installation hole in the jamb and head jamb. See figure 1A.

NOTE: You may need to remove or move sash to access installation hole(s).

2. Fasten brackets to frame with #7 x 5/8″ screws. See figure 1B.

NOTE: You may use one of the 3″ installation screws inserted through the bracket to keep it aligned with the installation hole.

3. On vertically mulled units, remove the interior mull cap. See figure 1C.
4. Place a mull bracket at the sill end of the aluminum mull tie as shown in figure 1D and attach with #7 x 5/8″ flat head screws.

NOTE for units with interior accessories (does not apply to IFCA units): *The barb used to fasten accessories to the frame will interfere with the installation screw. Use a 3/16″ drill bit to bore out the hole and remove barb material from the area. See figure 1E.*

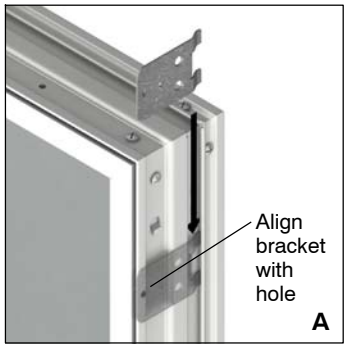

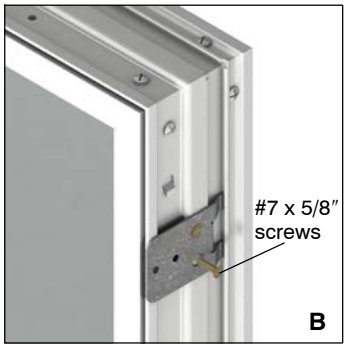

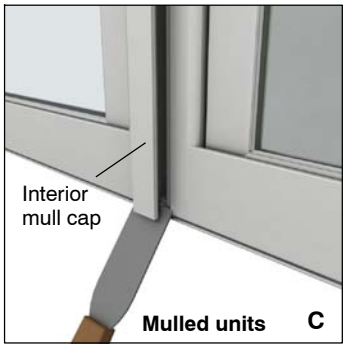

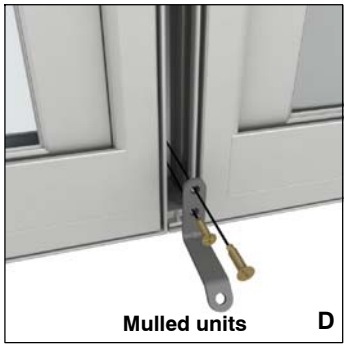

On field mulled IFSLP/T units, Remove the head jamb stop with a stiff putty knife. See figure 1F.

Slide the brackets 4″ (102) from the corners of the mulls and use the **center** hole on the bracket as a guide to drill 3/16″ holes in the frame. See figure 1G.

Fasten to frame with #7 x 5/8″ screws.

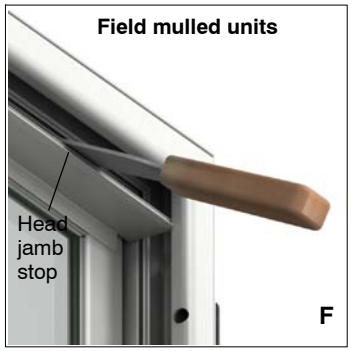

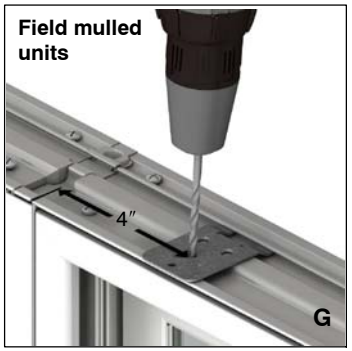

Figure 1: Attach brackets to frame. Field mulled units must have holes drilled in head jamb.

PREPARE THE OPENING AND INSTALLING THE WINDOW

1. On units with a frame width of 41 1/2″ (1054) or more, place three 3/8″ (10) beads of construction adhesive on the sill so that the window will contact these beads in all three locations. See figure 2.
2. Place construction adhesive below the sill on all Casement/Awning and Round Top products.
3. Square and plumb the unit in the opening (refer to installation instructions). Place shims above every installation hole. Apply the #8x3″ screws to permanently secure the unit to the framing members. Cover with hole plug. See figure 2A and 2B.

Note for IFSLP Units: *Carefully remove the head jamb stop to reveal the installation holes in the head jamb. Refer back to figure 1F on page 1.*

4. **Vertically Mulled Units**: Pre-drill through mull bracket and into rough opening with a 3/16″ drill bit and fasten with installation screw. Replace the mull cap removed earlier. See figures 2C and 2D.

Note: *If your opening has an angled sill fabricate and attach a filler block that will allow the sill of the Integrity window to sit flat and level. The filler block should extend out to the edge of the eventual exterior plane of the window.*

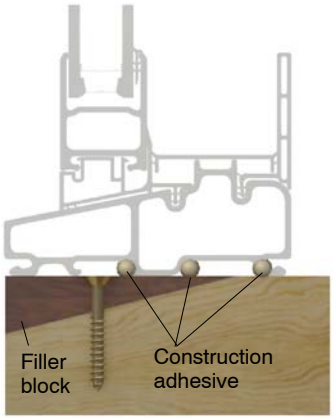

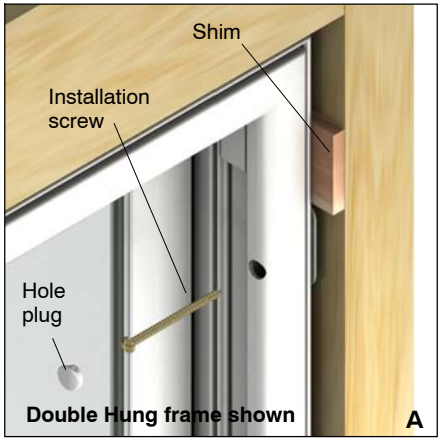

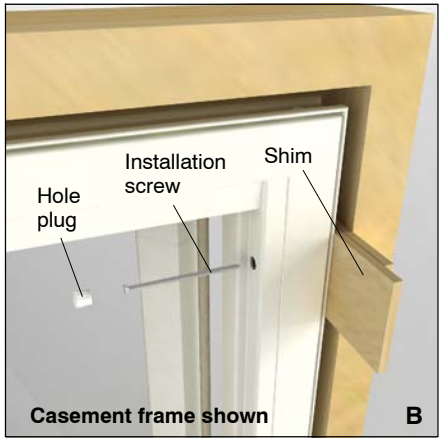

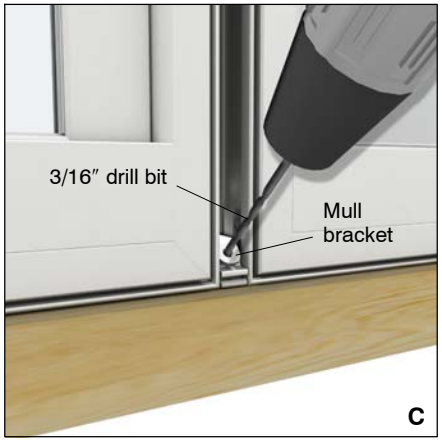

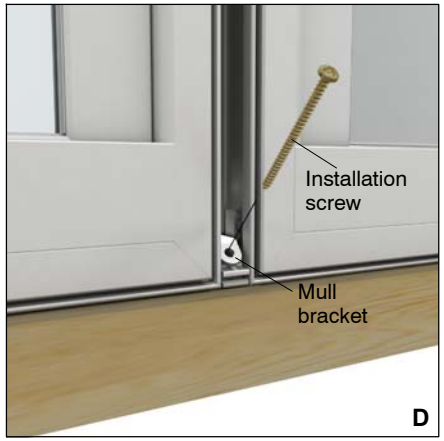

Figure 2: Prepare the opening and fasten through pre-drilled screw holes and bracket on mulls.

Other items available for installation:

- **Integrity All Ultrex Window Installation Instructions:** 19970123
- **Field Applied Through Jamb Position Kit** (instructions included)
  for IFSH/DH/GL/DG/IFRT -11800042
- **Through Jamb Installation Kit**
  for IFSH/DH/GL/DG/IFRT - 11800040
  for IFCA/AWN and IFSWP/T - 11800043
- **Through Jamb Mull Reinforcement Kit**
  for IFSH/DH/GL/DG,IFCA/AWN and IFSWP/T - 11800039