CHAPTER 14

INTEGRITY ALL ULTREX AWNING

Table of Contents

	PAGE
History	14.2
Part Identification – Operator	14.3
Part Identification – Stationary/Picture	14.4
Parts	
Hardware	14.5
Vinyl Parts	14.7
Weather Strip	14.9
Sash Replacement	14.10
Screens and Screen Parts	14.11
Service	
Installing the Roto-Gear Handle	14.12
Removing and Installing Screen	14.12

ATTENTION:

- Specification and technical data are subject to change without notice.
- Numbers listed in parentheses ( ) are metric equivalents in millimeters rounded to the nearest whole number.

HISTORY

PRODUCED	UNIT TYPE	FEATURES OR CHANGES	DISCONTINUED
February 2010	Awning	Introduction of the All Ultrex Awning unit.	Present

AWNING OPERATOR

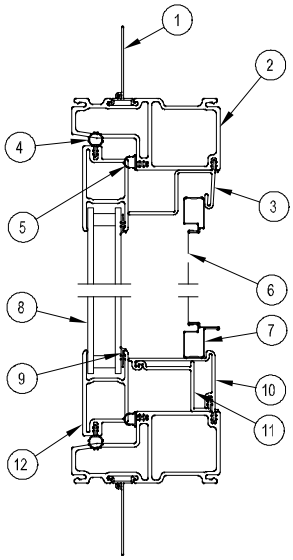

HEAD JAMB & SILL DETAIL

JAMB DETAIL

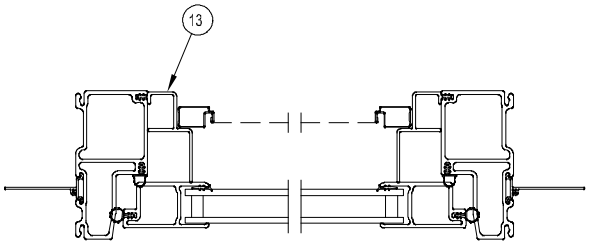

NOTE: Not to scale; specifications subject to change without notice.

1. Nail Fin, Locking
2. Frame
3. Frame Cover Head Jamb
4. Sash Weather Strip
5. Foam Weather Strip
6. Screen Mesh
7. Screen Frame
8. Insulated Glass
9. Glazing Boot, Sash
10. Frame Cover,Sill, Top
11. Frame Cover, Sill, Bottom
12. Sash
13. Frame Cover, Jamb

PART IDENTIFICATION

AWNING
STATIONARY / PICTURE

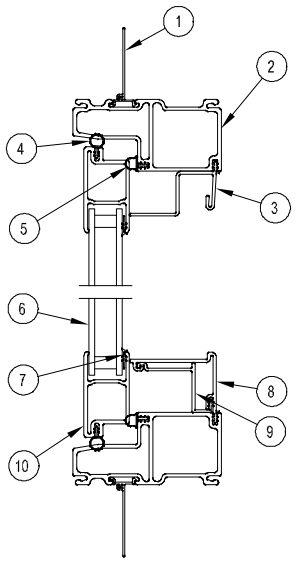

HEAD JAMB & SILL DETAIL

JAMB DETAIL

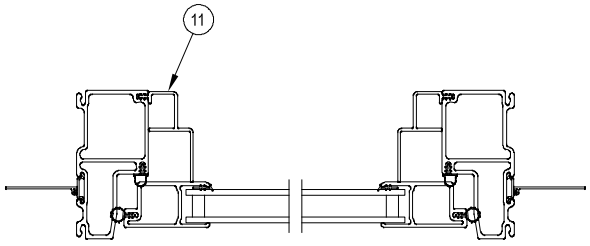

NOTE: Not to scale; specifications subject to change without notice.

1. Nail Fin, Locking
2. Frame
3. Frame Cover, Head Jamb
4. Sash Weather Strip
5. Foam Weather Strip
6. Insulated Glass
7. Glazing Boot Sash
8. Frame Cover, Sill, Top
9. Frame Cover, Sill, Bottom
10. Sash
11. Frame Cover, Jamb

When ordering replacement HARDWARE parts specify:

1. Type of unit; Part number; Description, Color

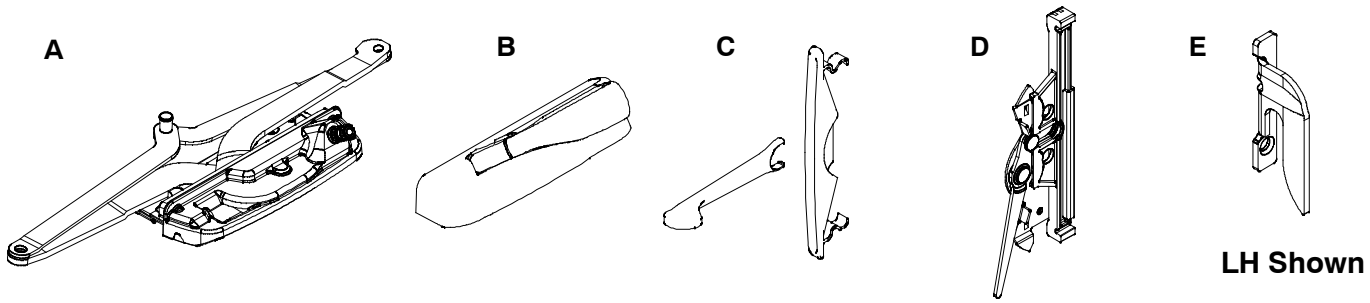

Description		Part Number
A: Scissor Arm Operator		10896278
B: Folding Handle/Cover	AF	10896251
	WH	10896254
	ORBZ	10896306
	SN	10896305
	BS	10896304
C: Lock Drive Handle and Escutcheon	AF	10896269
	WH	10896268
	ORBZ	10896309
	SN	10896308
	BS	10896307
D: Lock Drive Assembly		10896265
E: Keeper *2 keepers sent with all size units*	RH	10896292
	LH	10896295

When ordering replacement HARDWARE parts specify:

1. Type of unit; Part number; Description, Color

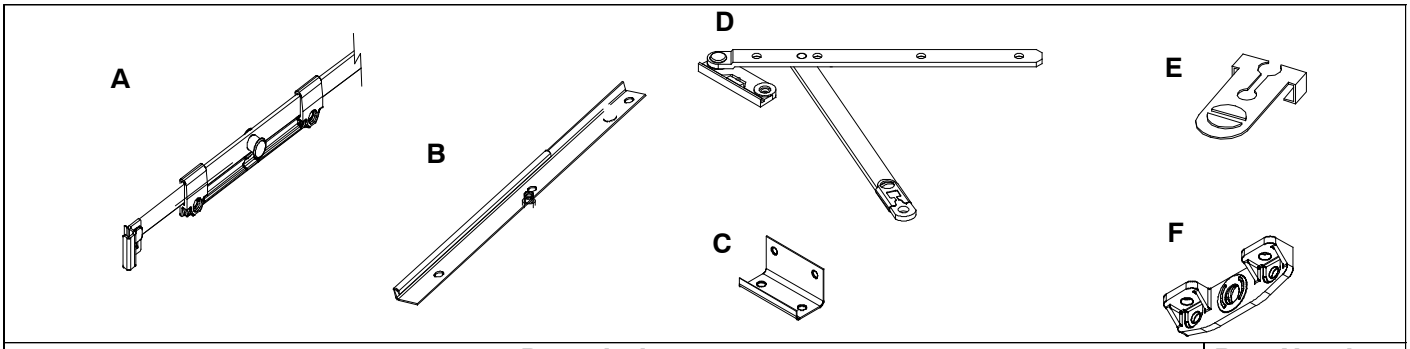

Description		Part Number
A: Tie Bar Assembly includes fasteners: *2 - 1/8"* (3) *x 19/32"*⟨15) *peel revets*	RH LH	11881090 11881091
B: Hinge Track	RH LH	10813007 10813006
C: Stationary Bracket		11841100
D: Hinge Arm Assembly	RH LH	10813005 10813004
E: Detach Hinge, Clip		10814839
F: Stud Bracket includes fasteners: *2 - 5/32"*(4) *x 9/16"*(14) *peel revets*		11881092

When ordering replacement FRAME SILL COVERS specify:

1. Profile number; Part number; Length

V1989 – Top, Operator	V1990 – Bottom, Operator	V1989 – Top, Stationary	V1990 – Bottom, Stationary
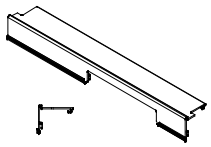	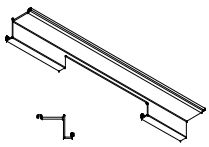	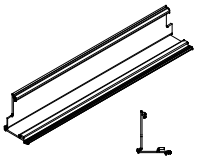	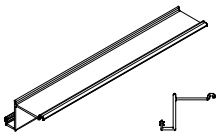

Description	Length	CN	Part Number
Frame Cover Kit, Operator *Includes:* *1 – V1989 top operator* *1 – V1990 bottom operator*	13 19/64″ (338)	CN16	11881071
	19 19/64″ (490)	CN20	11881072
	25 19/64″ (643)	CN26	11881073
	31 19/64″ (795)	CN30	11881074
	37 19/64″ (947)	CN36	11881075
	43 19/64″ (1100)	CN40	11881076
Frame Cover Kit, Stationary *Includes:* *1 – V1989 top stationary* *1 – V1990 bottom stationary*	13 19/64″ (338)	CN16	11881077
	19 19/64″ (490)	CN20	11881078
	25 19/64″ (643)	CN26	11881079
	31 19/64″ (795)	CN30	11881060
	37 19/64″ (947)	CN36	11881061
	43 19/64″ (1100)	CN40	11881062

When ordering replacement FRAME COVERS specify:

1. Profile number; Part number; Length; Handing

V1899 – Head Jamb, Frame Cover

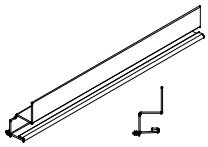

V1900 – Jamb Stat/Hinge Side, Frame Cover

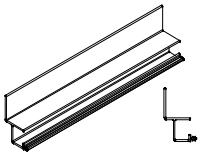

V1900 – Jamb Lock Side, Frame Cover

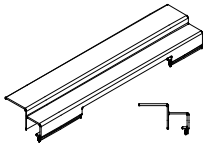

Description	Length	CN	RH PN	LH PN
Frame Cover Jamb Lock	14 1/2″ (368)	CN16	17008014	17008019
	20 1/2″ (521)	CN20	17008320	17008321
	26 1/2″ (673)	CN26	17008326	17008327
	30 1/2″ (826)	CN30	17008332	17008333

Description	Length	CN	Part Number
Frame Cover Jamb Stat/Hinge Side	14 1/2″ (368)	CN16	17006014
	20 1/2″ (521)	CN20	17006020
	26 1/2″ (673)	CN26	17006026
	32 1/2″ (826)	CN30	17006032
Frame Cover Head Jamb	13 19/64″ (338)	CN16	17003013
	19 19/64″ (490)	CN20	17003019
	25 19/64″ (643)	CN26	17003025
	31 19/64″ (795)	CN30	17003031
	37 19/64″ (947)	CN36	17003037
	43 19/64″ (1100)	CN40	17003043

WEATHER STRIP

When ordering replacement WEATHER STRIP specify:

1. Profile number; Part number; Length

A V189 Frame Weather Strip

B V147 Head jamb, Sill and Sash Weather Strip

Description				Part Number
A: V189 Frame Weather Strip	15 1/8″ (384)	CN16	BK	17013015
	21 1/8″ (536)	CN20	BK	17013021
	27 1/8″ (689)	CN26	BK	17013027
	33 1/8″ (841)	CN30	BK	17013033
	39 1/8″ (994)	CN36	BK	17013039
	45 1/8″ (1146)	CN40	BK	17013045
B: V147 Sash Weather Strip	15 1/2″ (394)	CN16	BK	17001416
	21 1/2″ (546)	CN20	BK	17001420
	27 1/2″ (698)	CN26	BK	17001426
	33 1/2″ (851)	CN30	BK	17001430
	39 1/2″ (1003)	CN36	BK	17001436
	45 1/2″ (1156)	CN40	BK	17001440

When ordering replacement SASH specify:

1. Size (using chart below);
2. Operating or stationary;
3. Stone White (SW), Pebble Gray (PB), Bronze (BZ), Evergreen (EG), Cashmere (CS) or Ebony (EB) exterior;
4. Glazing;
5. Interior color

Sash Sizes for Awning

Manufactured 02-22-2010 to Present

Daylight Opening to Sash OM

Daylight Width + 3 17/32″ = OM Width of Sash
Daylight Height + 3 17/32″ = OM Height of Sash

NOTE: Awning sash is not reglazable.
Replacement sash will include all hardware.

Size	OM Width	
CN16	15 17/32″	(420)
CN20	21 17/32″	(521)
CN26	27 17/32″	(674)
CN30	33 17/32″	(775)
CN36	39 17/32″	(928)
CN40	45 17/32″	(1029)

Size	OM Height	
CN16	15 17/32″	(420)
CN20	21 17/32″	(521)
CN26	27 17/32″	(674)
CN30	33 17/32″	(775)

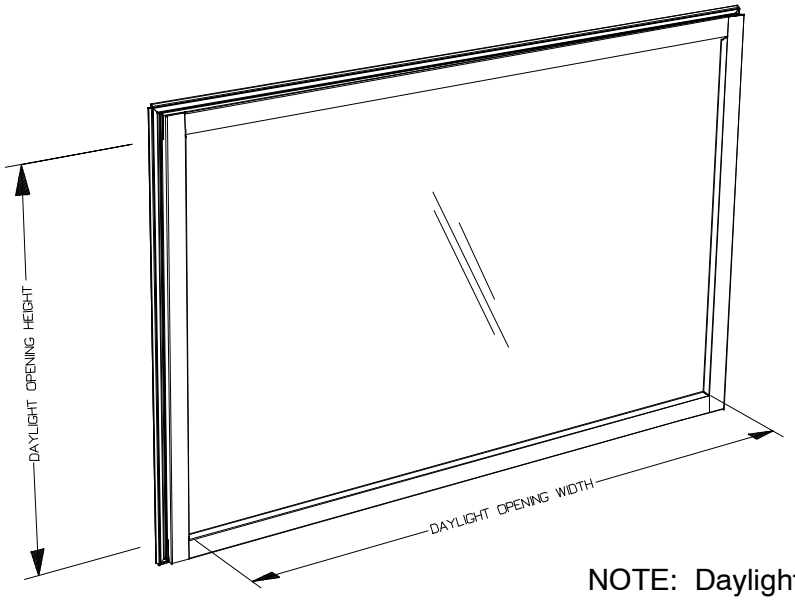

INTERIOR VIEW

NOTE: Daylight opening is a measurement of visible glass.

AWNING

ORDERING REPLACEMENT SCREENS FOR AWNING UNITS

Standard screens offer almond frost aluminum surround and charcoal colored fiberglass 18 x 16 screen mesh. Determine the outside measurement (OM) of the existing screen. Find the sizes that correspond to the width and height indicated on the following chart.

When ordering replacement screen specify:

1. Size; – measure the existing screen OM, if not available, determine the size of the screen by using the conversion chart below shown below.

Screen Sizes for the All Ultrex Awning

Manufactured 2010 to Present
Daylight Opening to OM of Screen

Daylight opening is the measurement of the visible glass.
Daylight Width + 1 13/32″ (36)= OM Width of Screen
Daylight Height + 1 1/64″ (26) = OM Height of Screen

NOTE: OM of aluminum screen includes corner keys.

NOTE: Screens feature leaf spring mounting system.

Size	OM Width	
CN16	13 15/64″	(336)
CN20	19 15/64″	(489)
CN26	25 15/64″	(641)
CN30	31 15/64″	(793)
CN36	37 15/64″	(946)
CN40	43 15/64″	(1098)

Size	OM Height	
CN16	12 53/64″	(326)
CN20	18 53/64″	(478)
CN26	24 53/64″	(631)
CN30	30 53/64″	(783)

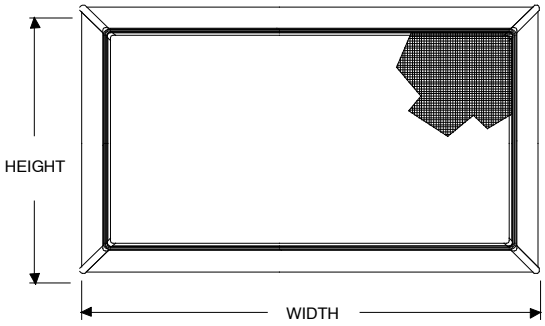

ILLUSTRATION *NOT TO SCALE*	DESCRIPTION	OPER./ COLOR	PART NO.
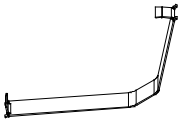	**Leaf Spring**	SS	313430

INSTALLING THE ROTO-GEAR HANDLE

1. With sash in closed position, snap cover on over the base. Install roto-gear handle as shown in illustration 1.
2. Tighten set screw.

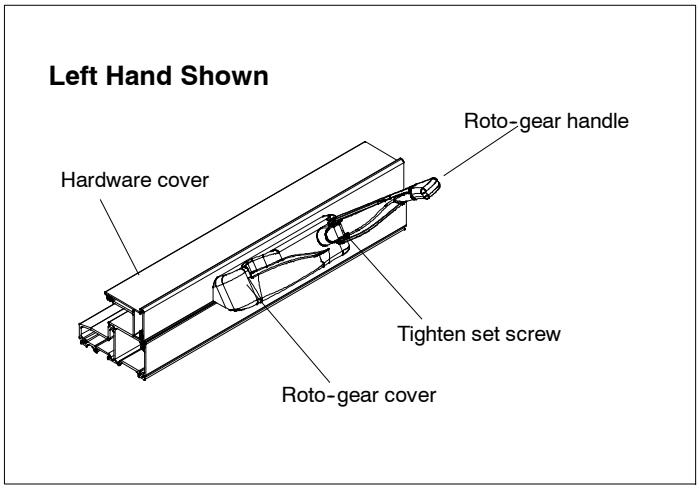

REMOVING AND INSTALLING SCREEN
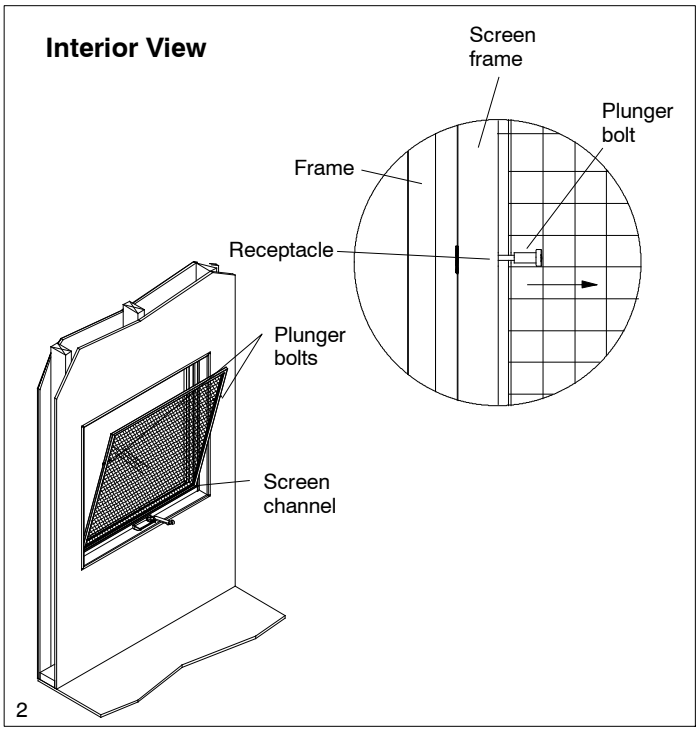
1. To remove screen, grasp plunger bolts, pulling toward center. Draw screen towards you and lift upward, removing screen from channel.
2. To install screen, place screen into screen channel. Grasp plunger bolts, pulling toward center, pushing screen tight against frame. Release plungers to lock into receptacles.