CHAPTER 7A

BOW AND BAY

TABLE OF CONTENTS

History 7A.2
Casement Bow/Bay Stationary 7A.3
Casement 4 and 5 Wide Bow Jamb Detail 7A.4
Casement 45° and 30° Bay Jamb Detail 7A.5
ITDH Bay Head Jamb and Sill Detail 7A.6
ITDH 30° and 45° Bay Jamb Detail 7A.7
Installation Accessories 7A.8
Casement Mull Kits 7A.9
Double Hung Mull Kits 7A.13
Mull Kit Parts Miscellaneous 7A.15
Mull Kit Parts Wood 7A.19
Head and Seat Boards 7A.23
Obsolete Parts 7A.24

ATTENTION:

- Specification and technical data are subject to change without notice.
- Numbers listed in parentheses ( ) are metric equivalents in millimeters rounded to the nearest whole number.

PRODUCED	UNIT TYPE	FEATURES OR CHANGES	STATUS
April 2000	Casement Bow	Added 5 wide mulling option in CN17, CN21 and CN25 widths available factory mulled.	Available

CASEMENT
BOW/BAY

NOTE: Stationary unit shown

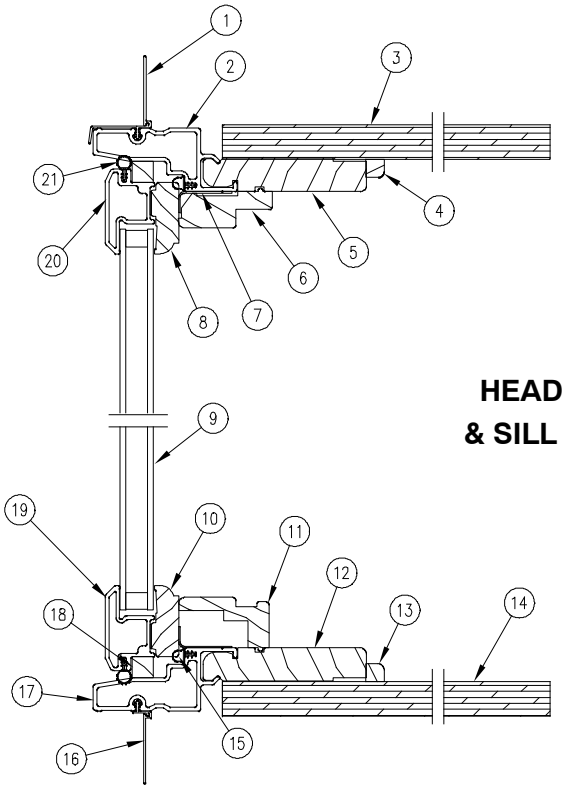

HEAD JAMB
& SILL DETAIL

NOTE: Not to scale; specifications subject to change without notice.

1. Head Jamb Nailing Fin/Drip Cap
2. Head Jamb Cladding
3. Head Board
4. Top Interior Trim
5. Head Jamb
6. Head Jamb Stop
7. Stationary Bracket
8. Top Rail
9. Insulating Glass
10. Bottom Rail
11. Hardware Cover
12. Sill
13. Bottom Interior Trim
14. Seat Board
15. Frame Weather Strip
16. Sill Nailing Fin
17. Sill Cladding
18. Centering Block
19. Top Rail Cladding
20. Sash Weather Strip

CASEMENT BOW

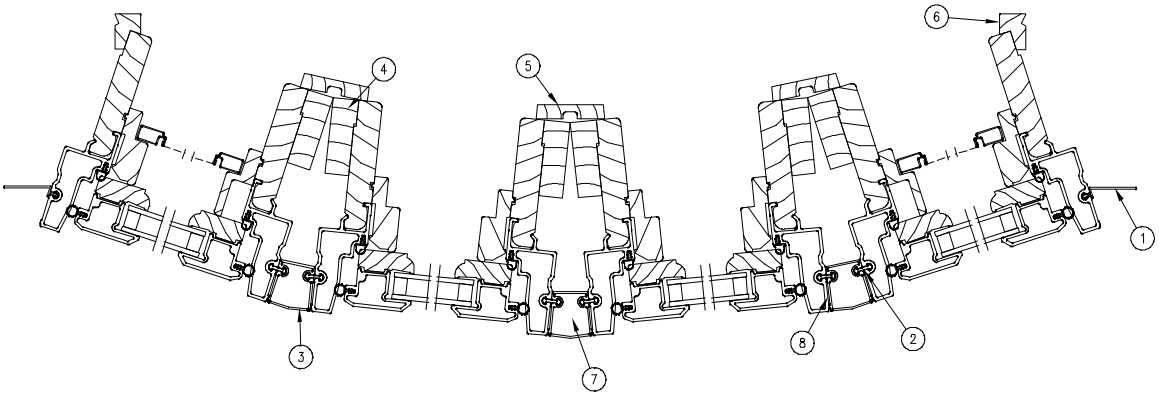

4 WIDE BOW JAMB DETAIL

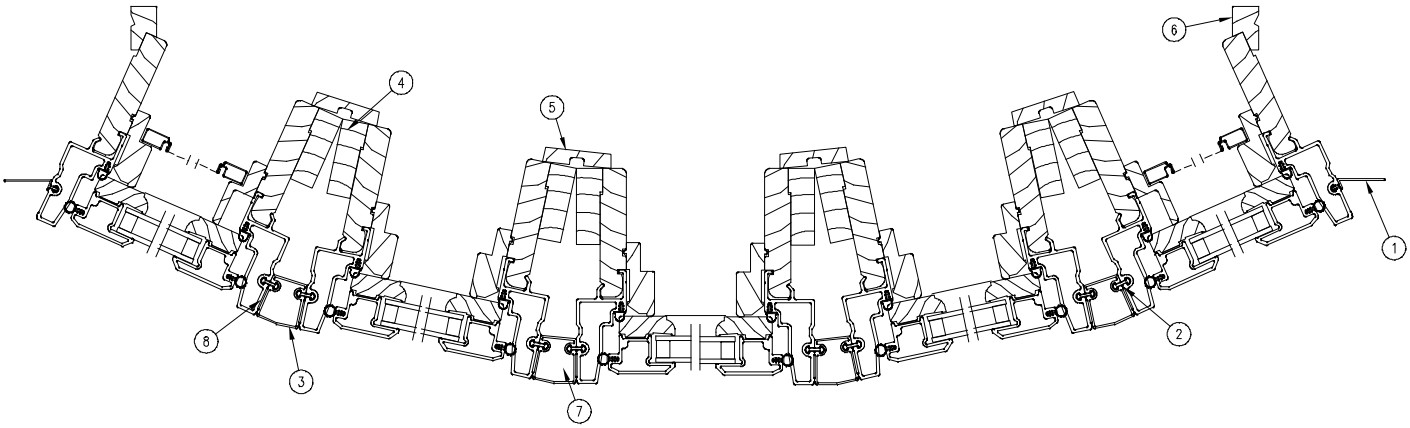

5 WIDE BOW JAMB DETAIL

NOTE: For more detail refer to previous part identification pages.

NOTE: Not to scale; specifications subject to change without notice.

1. Jamb Nailing Fin
2. Mulling Pin
3. Connecting Block
4. Mull Filler Block
5. Interior Mull Trim
6. Return Jamb
7. Connector Block (Foam Plug)
8. Mullion Tape

CASEMENT BAY

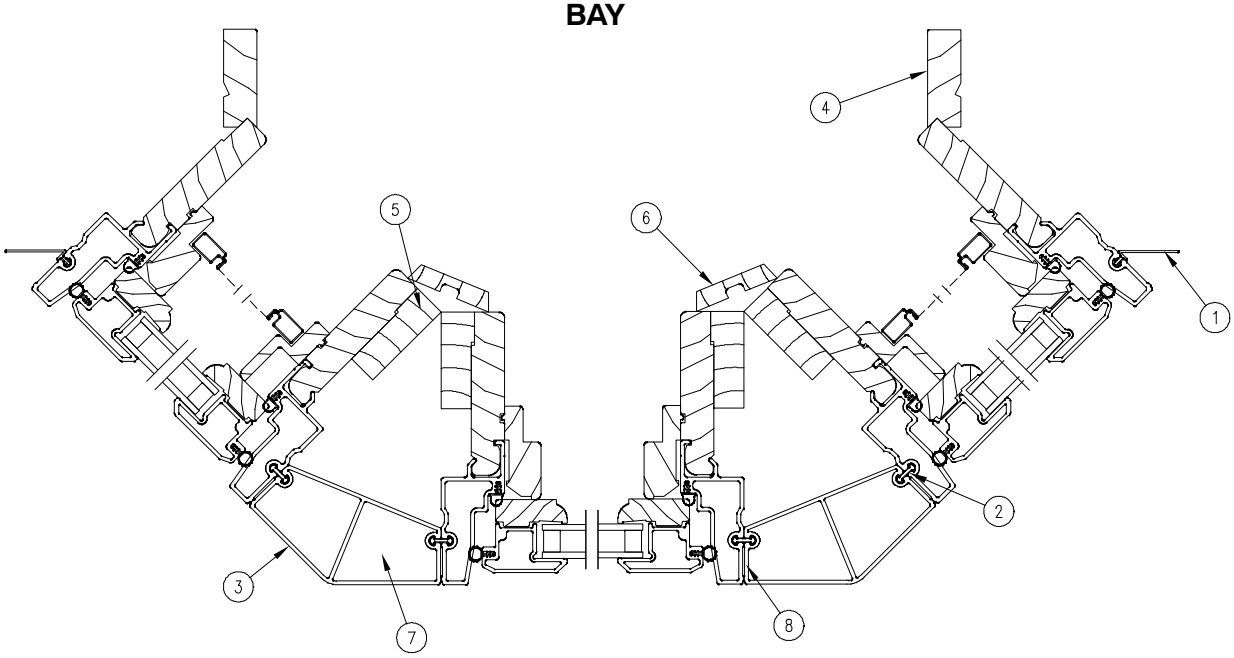

45° BAY JAMB DETAIL

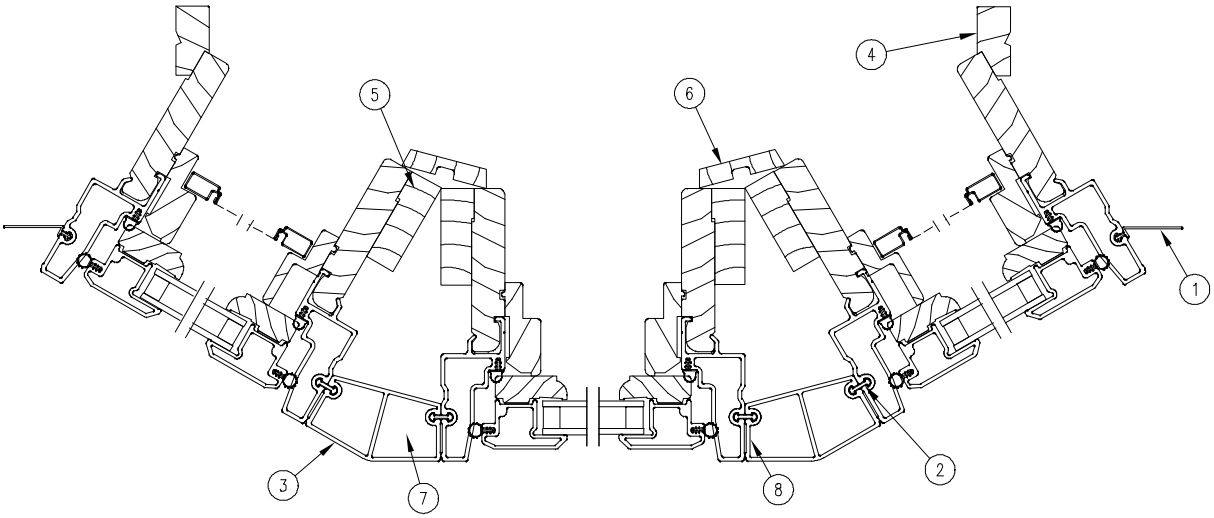

30° BAY JAMB DETAIL

NOTE: For more detail refer to previous part identification pages.

NOTE: Not to scale; specifications subject to change without notice.

1. Jamb Nailing Fin
2. Mullion Pin
3. Connecting Block
4. Return Jamb
5. Mull Filler Block
6. Interior Mull Trim
7. Connector Block (Foam Plug)
8. Mullion Sealant Foam Tape

DOUBLE HUNG BAY

HEAD JAMB & SILL DETAIL

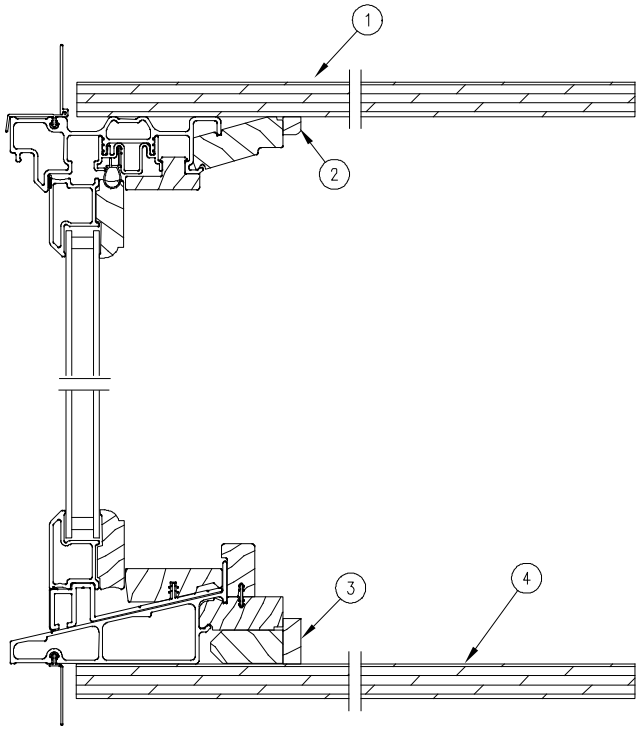

NOTE: Picture unit shown

NOTE: Not to scale; specifications subject to change without notice.

1. Head Board
2. Top Interior Trim
3. Bottom Interior Trim
4. Seat Board

DOUBLE HUNG BAY

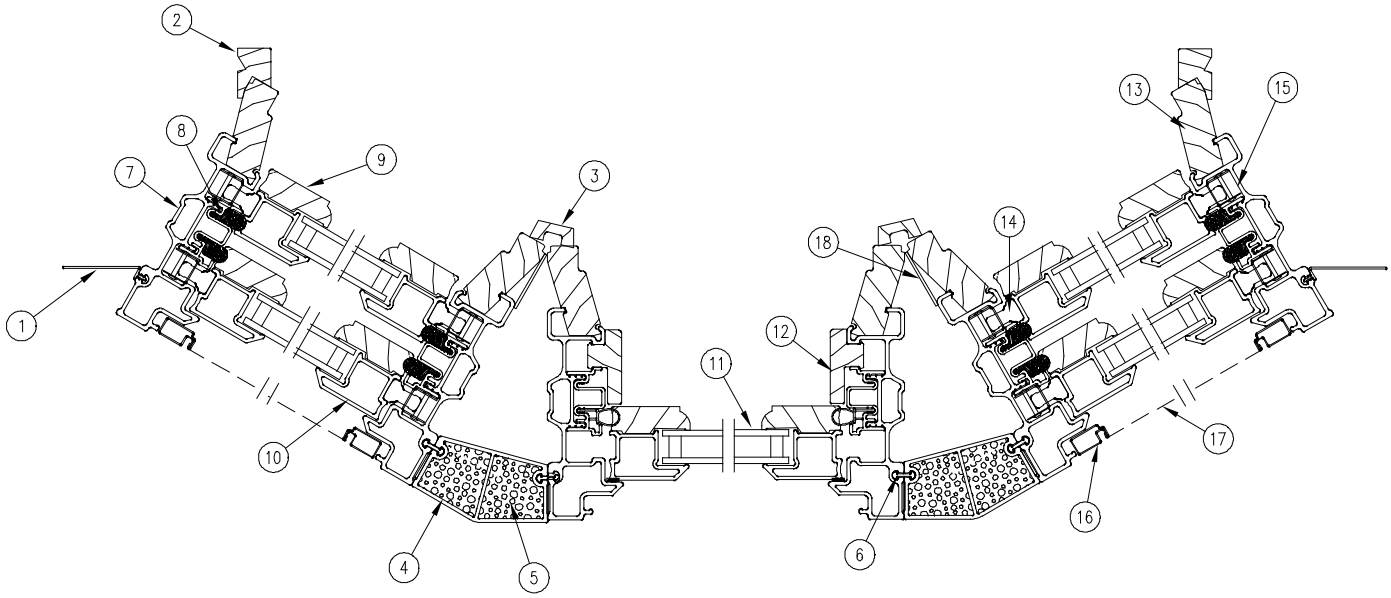

30° BAY JAMB DETAIL

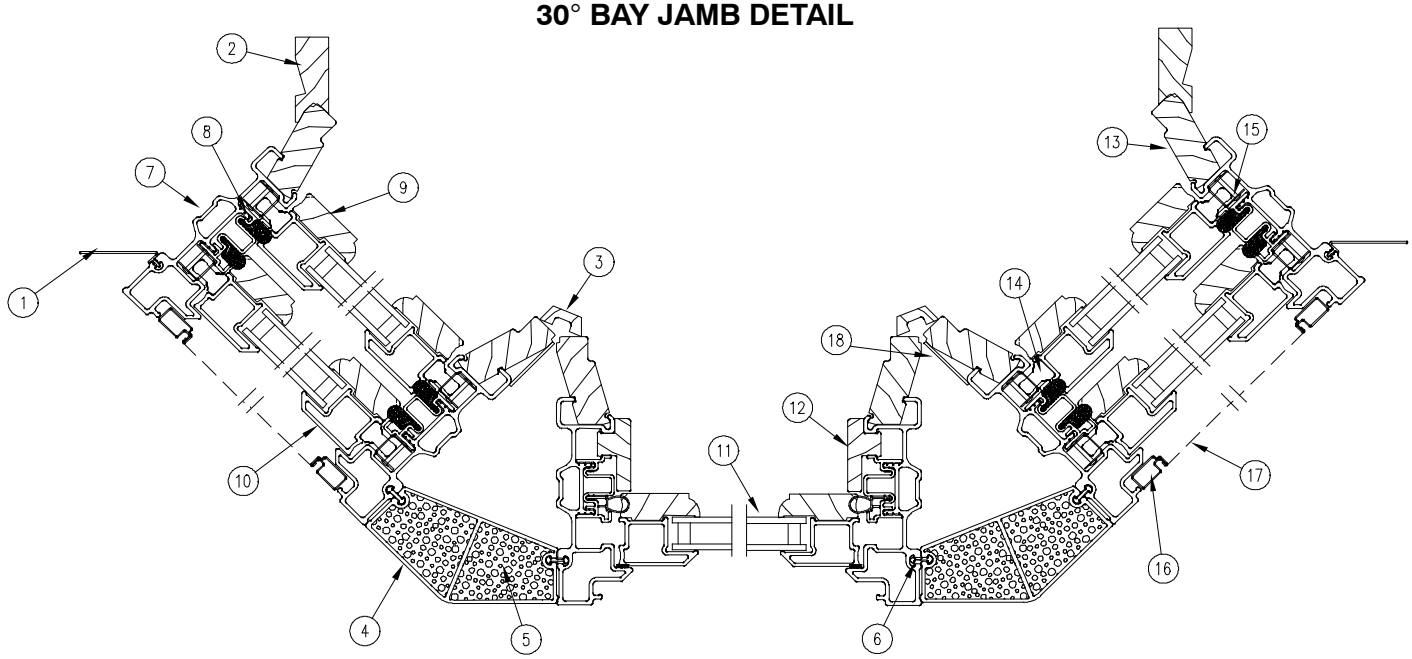

45° BAY JAMB DETAIL

NOTE: Not to scale; specifications subject to change without notice.

1. Jamb Nailing Fin
2. Jamb Extension
3. Interior Mull Trim
4. Connector Block
5. Foam Plug-Connector Block
6. Mulling Pin
7. Jamb (Ultrex)
8. Jamb Weather Strip
9. Stile
10. Stile (Ultrex)
11. Insulating Glass
12. Jamb Interior Stop
13. Jamb Liner
14. Sash Pivot Pin
15. Balance Tube Assembly
16. Screen Frame
17. Screen
18. Jamb Filler

ILLUSTRATION *NOT TO SCALE*	DESCRIPTION	LENGTH/COLOR	PART NO.
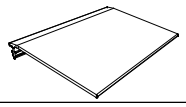	**Jamb/Sill Nailing Fin Bows and Bays - V112** *Note: For Bows and Bays only, hinged*	144″ (3658)	16000598

MULL KITS – CASEMENT

KIT	DESCRIPTION	SIZE	BARE WOOD	WHITE INTERIOR
Casement 30° Bay Mull Kit *Includes:* *4-A330 Mullion Pin* *1-Mull Tape 1 sided* *4-Nail Fin Connector* *6-W7002 Horizontal Trim* *6-W7006 Horizontal Mull Filler Block* *2-W1175 Vertical Trim* *2-A168 30° Bay Connector* *8-30° Bay Foam Connector Block* *2-W7223 4 9/16 Jamb Extention* *2-W7224 6 9/16 Jamb Extension* *2-W2207 6 13/16 Jamb Extension*	**4 9/16″ Jamb Extension**			
	SW	CN 47	11894348	39264348
	PB	CN 47	11897948	39267948
	BZ	CN 47	11898648	39268648
	EG	CN 47	11897648	39260048
	CS	CN 47	11897849	39260148
	SW	CN 71	11894371	39264371
	PB	CN 71	11897971	39267971
	BZ	CN 71	11898271	39268271
	EG	CN 71	11898271	39268371
	CS	CN 71	11898471	39268471
	6 9/16″ Jamb Extension			
	SW	CN 47	11894448	39264448
	PB	CN 47	11898148	39268148
	BZ	CN 47	11899448	39269448
	EG	CN 47	11897748	39269548
	CS	CN 47	11897748	39269648
	SW	CN 71	11894471	39264471
	PB	CN 71	11898171	39268171
	BZ	CN 71	11899771	39269771
	EG	CN 71	11898671	39269548
	CS	CN 71	11898591	39260171
	6 13/16″ Jamb Extension			
	SW	CN 47	11894548	39264548
	PB	CN 47	11899248	39269248
	BZ	CN 47	11900249	39270249
	EG	CN 47	11901249	39270349
	CS	CN 47	11901251	39271149
	SW	CN 71	11894571	39264571
	PB	CN 71	11899271	39269271
	BZ	CN 71	11900273	39270273
	EG	CN 71	11901173	39270373
	CS	CN 71	11901273	39271173

MULL KITS – CASEMENT

KIT	DESCRIPTION	SIZE	BARE WOOD	WHITE INTERIOR
Casement 45° Bay Mull Kit *Includes:* *4-A330 Mullion Pin* *1-Mull Tape 1 sided* *4-Nail Fin Connector* *4-W7002 Horizontal Trim* *6-W7006 Horizontal Mull Filler Block* *2-W1187 Vertical Trim* *2-A167 45° Bay Connector* *8-45 Bay° Foam Connector Block* *2-W7306 4 9/16 Jamb Extention* *2-W7305 6 9/16 Jamb Extension* *2-W2208 6 13/16 Jamb Extension*	**4 9/16″ Jamb Extension**			
	SW	CN 47	11895047	39265047
	PB	CN 47	11899247	39269247
	BZ	CN 47	11900247	39270247
	EG	CN 47	11900147	39270347
	CS	CN 47	11900349	39271147
	SW	CN 71	11895071	39265071
	PB	CN 71	11899271	39269271
	BZ	CN 71	11900271	39270271
	EG	CN 71	11900371	39270371
	CS	CN 71	11900569	39271171
	6 9/16″ Jamb Extension			
	SW	CN 47	11895147	39265147
	PB	CN 47	11899447	39269447
	BZ	CN 47	11900447	39270447
	EG	CN 47	11900347	39270547
	CS	CN 47	11900551	39271247
	SW	CN 71	11895171	39265171
	PB	CN 71	11899471	39269471
	BZ	CN 71	11900471	39270471
	EG	CN 71	11900571	39270571
	CS	CN 71	11900578	39271271
	6 13/16″ Jamb Extension			
	SW	CN 47	11895247	39265247
	PB	CN 47	11899647	39269647
	BZ	CN 47	11900647	39270647
	EG	CN 47	11900648	39270747
	CS	CN 47	11900649	39271248
	SW	CN 71	11895271	39265271
	PB	CN 71	11899671	39269671
	BZ	CN 71	11900671	39270671
	EG	CN 71	11900771	39270771
	CS	CN 71	11900772	39271272

MULL KITS – CASEMENT

KIT	DESCRIPTION	SIZE	BARE WOOD	WHITE INTERIOR
Casement 12° 4-Wide Bay Mull Kit *Includes:* *6-A330 Mullion Pin* *1-Mull Tape 1 sided* *6-Nail Fin Connector* *6-W7002 Horizontal Trim* *8-W7006 Horizontal Mull Filler Block* *3-W1189 Vertical Trim* *3-A166 12° Bay Connector* *6-12° Bay Foam Connector Block* *2-W7311 4 9/16 Jamb Extention* *2-W7304 6 9/16 Jamb Extension* *2-W2211 6 13/16 Jamb Extension*	**4 9/16″ Jamb Extension**			
	SW	CN 47	11894647	39264647
	PB	CN 47	11898847	39268847
	BZ	CN 47	11899747	39269747
	EG	CN 47	11895347	39260047
	CS	CN 47	11895749	39260147
	SW	CN 71	11894671	39264671
	PB	CN 71	11898871	39268871
	BZ	CN 71	11890871	39269871
	EG	CN 71	11890971	39269974
	CS	CN 71	11890972	39260274
	6 9/16″ Jamb Extension			
	SW	CN 47	11894747	39264747
	PB	CN 47	11899047	39269047
	BZ	CN 47	11900047	39270047
	EG	CN 47	11900747	39270147
	CS	CN 47	11900748	39270847
	SW	CN 71	11894771	39264771
	PB	CN 71	11899071	39269071
	BZ	CN 71	11900171	39270071
	EG	CN 71	11900871	39270171
	CS	CN 71	11900872	39270871
	6 13/16″ Jamb Extension			
	SW	CN 47	11894847	39264847
	PB	CN 47	11899947	39269947
	BZ	CN 47	11900947	39270947
	EG	CN 47	11900847	39271047
	CS	CN 47	11900848	39271447
	SW	CN 71	11894871	39264871
	PB	CN 71	11899971	39269971
	BZ	CN 71	11900971	39270971
	EG	CN 71	11901071	39271071
	CS	CN 71	11901171	39271471

MULL KITS – CASEMENT

KIT	DESCRIPTION	SIZE	BARE WOOD	WHITE INTERIOR
Casement 12° 5-Wide Bay Mull Kit *Includes:* *8-A330 Mullion Pin* *1-Mull Tape 1 sided* *6-Nail Fin Connector* *10-W7002 Horizontal Trim* *10-W7006 Horizontal Mull Filler Block* *4-W1189 Vertical Trim* *4-A166 12° Bay Connector* *6-12° Bay Foam Connector Block* *2-W2138 4 9/16 Jamb Extention* *2-W2141 6 9/16 Jamb Extension* *2-W2209 6 13/16 Jamb Extension*	**4 9/16″ Jamb Extension**			
	SW	CN 47	11894648	39264648
	PB	CN 47	11898848	39268848
	BZ	CN 47	11899948	39269848
	EG	CN 47	11895248	39269948
	CS	CN 47	11895649	39260248
	SW	CN 71	11894672	39264672
	PB	CN 71	11898872	39268872
	BZ	CN 71	11899972	39269872
	EG	CN 71	11894972	39269972
	CS	CN 71	11895072	39260272
	6 9/16″ Jamb Extension			
	SW	CN 47	11894748	39264748
	PB	CN 47	11899048	39269048
	BZ	CN 47	11900048	39270048
	EG	CN 47	11900248	39270148
	CS	CN 47	11900348	39270848
	SW	CN 71	11894772	39264772
	PB	CN 71	11899072	39269072
	BZ	CN 71	11900172	39270072
	EG	CN 71	11900272	39270172
	CS	CN 71	11900372	39270872
	6 13/16″ Jamb Extension			
	SW	CN 47	11894848	39264848
	PB	CN 47	11899949	39269949
	BZ	CN 47	11900049	39270949
	EG	CN 47	11901049	39271049
	CS	CN 47	11901159	39271449
	SW	CN 71	11894872	39264872
	PB	CN 71	11899973	39269973
	BZ	CN 71	11900973	39270973
	EG	CN 71	11901073	39271073
	CS	CN 71	11901072	39271473

MULL KITS – DOUBLE HUNG/GLIDER

KIT	DESCRIPTION	SIZE	BARE WOOD	WHITE INTERIOR
Double Hung 30° Bay Mull Kit *Includes:* *4-A330 Mullion Pin* *1-Wood Filler (RT Bending Stock)* *2-A168 30° Bay Connector* *8-30° Bay Foam Connector Block* *3-W7002 Interior Top Trim* *3-W6110 Interior Sill Trim* *2-W7011 Jamb Filler Block* *2-W1174 30 Bay Vertical Interior Trim* *2-W7291 4 9/16 Return Jamb Extension* *2-W7323 6 9/16 Return Jamb Extension* *2-W2212 6 13/16 Return Jamb Extension*	**4 9/16 Jamb Extension**			
	SW	CN 48	11893248	39213248
	PB	CN 48	11893548	39213548
	BZ	CN 48	11894549	39214548
	EG	CN 48	11895148	39214848
	CS	CN 48	11895549	39215448
	SW	CN 76	11895676	39265676
	PB	CN 76	11898376	39268376
	BZ	CN 76	11897376	39267376
	EG	CN 76	11897476	39267476
	CS	CN 76	11897776	39267576
	6 9/16 Jamb Extension			
	SW	CN 48	11893348	39213348
	PB	CN 48	11893648	39213648
	BZ	CN 48	11894248	39214648
	EG	CN 48	11893848	39214948
	CS	CN 48	11893849	39215548
	SW	CN 76	11895776	39265776
	PB	CN 76	11898576	39268576
	BZ	CN 76	11899576	39269776
	EG	CN 76	11897576	39269876
	CS	CN 76	11897879	39269976
	6 13/16 Jamb Extension			
	SW	CN 48	11893448	39213448
	PB	CN 48	11893748	39213748
	BZ	CN 48	11894948	39214748
	EG	CN 48	11895048	39215048
	CS	CN 48	11895449	39215648
	SW	CN 76	11895876	39265876
	PB	CN 76	11899276	39269276
	BZ	CN 76	11900376	39270376
	EG	CN 76	11900476	39270476
	CS	CN 76	11900579	39271176

Mullion Kits also include screws (where applicable), nailing fin/drip cap, corner gaskets and instructions.

MULL KITS – DOUBLE HUNG/GLIDER

KIT	DESCRIPTION	SIZE	BARE WOOD	WHITE INTERIOR
Double Hung 45° Bay Mull Kit *Includes:* *4-A330 Mullion Pin* *1-Wood Filler (RT Bending Stock)* *2-A167 45° Bay Connector* *8-45° Bay Foam Connector Block* *3-W7002 Interior Top Trim* *3-W6110 Interior Sill Trim* *2-W1244 45° Bay Vertical Interior Trim* *2-W1174 30° Bay Vertical Interior Trim* *2-W7329 4 9/16 Return Jamb Extension* *2-W7328 6 9/16 Return Jamb Extension* *2-W2212 6 13/16 Return Jamb Extension*	**4 9/16 Jamb Extension**			
	SW	CN 48	11892648	39212648
	PB	CN 48	11892948	39212948
	BZ	CN 48	11893948	39213948
	EG	CN 48	11892448	39214248
	SW	CN 76	11895376	39255376
	PB	CN 76	11899876	39255676
	BZ	CN 76	11900676	39256676
	EG		11900276	39256976
	6 9/16 Jamb Extension			
	SW	CN 48	11892748	39212748
	PB	CN 48	11893048	39213048
	BZ	CN 48	11894048	39214048
	EG	CN 48	11892548	39214348
	SW	CN 76	11895476	39255476
	PB	CN 76	11899676	39255876
	BZ	CN 76	11900876	39256876
	EG	CN 76	11900976	39257076
	6 13/16 Jamb Extension			
	SW	CN 48	11892848	39212848
	PB	CN 48	11893148	39213148
	BZ	CN 48	11894148	39214148
	EG	CN 48	11892348	39214448
	SW	CN 76	11895576	39255576
	PB	CN 76	11896176	39255176
	BZ	CN 76	11897176	39256176
	EG	CN 76	11897276	39257176

Mullion Kits also include screws (where applicable), nailing fin/drip cap, corner gaskets and instructions.

MULL KIT PARTS – MISCELLANEOUS

When ordering replacement mull kit components specify:

1. Part Number;
2. Description;
3. Profile.

ILLUSTRATION *NOT TO SCALE*	DESCRIPTION	LENGTH / COLOR	PART NO.
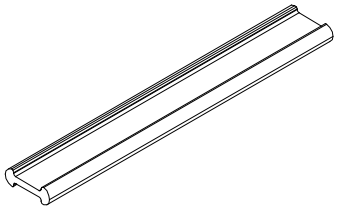	**Mullion Pin** A330 **ICA/IAWN** CN 47 CN 71	46 5/8″ (1184) 70 5/8″ (1794)	15344348 15344372
	ITDH/IGL CN 48 CN 72	47″ (1194) 71″ (1803)	15344148 15344172
	Lineal	150″ (3810)	11103250
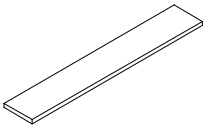	**Mull Tape - 1 Sided Adhesive** 3/32″ x 1/2″	96″ (2438) 100′ (30 meters)	11869508 11406224

MULL KIT PARTS – MISCELLANEOUS

ILLUSTRATION *NOT TO SCALE*	DESCRIPTION	LENGTH / COLOR	PART NO.
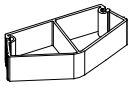	**30 ° Bay Connector** A168		
	47 SW	47 1/8″ (1197)	19613247
	47 PB	47 1/8″ (1197)	18613347
	47 BZ	47 1/8″ (1197)	19614247
	47 EG	47 1/8″ (1197)	19614347
	47 CS	47 1/8″ (1197)	19614447
	ICA		
	71 SW	71 1/8″ (1807)	19613271
	71 PB	71 1/8″ (1807)	18613371
	71 BZ	71 1/8″ (1807)	19614271
	71 EG	71 1/8″ (1807)	19614371
	71 CS	71 1/8″ (1807)	19614471
	48 SW	47 3/4″ (1213)	19613448
	48 PB	47 3/4″ (1213)	18613548
	48 BZ	47 3/4″ (1213)	19614448
	48 EG	47 3/4″ (1213)	19614548
	48 CS	47 3/4″ (1213)	19614648
	ITDH		
	76 SW	75 3/4″ (1924)	19613476
	76 PB	75 3/4″ (1924)	18613576
	76 BZ	75 3/4″ (1924)	19614476
	76 EG	75 3/4″ (1924)	19614576
	76 CS	75 3/4″ (1924)	19614676
	Lineal SW	150″ (3810)	19613199
	PB	150″ (3810)	18613899
	BZ	150″ (3810)	18614399
	EG	150″ (3810)	19614499
	CS	150″ (3810)	19614599

MULL KIT PARTS – MISCELLANEOUS

ILLUSTRATION *NOT TO SCALE*	DESCRIPTION	LENGTH / COLOR	PART NO.
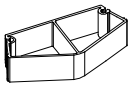	**45° Bay Connector** A167		
	47 SW	47 1/8″ (1197)	19611702
	47 PB	47 1/8″ (1197)	18611802
	47 BZ	47 1/8″ (1197)	19612702
	47 EG	47 1/8″ (1197)	19613702
	47 CS	47 1/8″ (1197)	19613802
	ICA		
	71 SW	71 1/8″ (1807)	19611706
	71 PB	71 1/8″ (1807)	18611806
	71 BZ	71 1/8″ (1807)	19612706
	71 EG	71 1/8″ (1807)	19613706
	71 CS	71 1/8″ (1807)	19613806
	48 SW	47 3/4″ (1213)	19611711
	48 PB	47 3/4″ (1213)	18611811
	48 BZ	47 3/4″ (1213)	19612711
	48 EG	47 3/4″ (1213)	19612811
	48 CS	47 3/4″ (1213)	19612911
	ITDH		
	76 SW	75 3/4″ (1924)	19611718
	76 PB	75 3/4″ (1924)	18611818
	76 BZ	75 3/4″ (1924)	19612718
	76 EG	75 3/4″ (1924)	19612818
	76 CS	75 3/4″ (1924)	19612918
	Lineal SW	150″ (3810)	19611699
	PB	150″ (3810)	18611799
	BZ	150″ (3810)	19614199
	EG	150″ (3810)	19614299
	CS	150″ (3810)	19614699
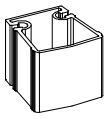	**12° Bow Connector** A166		
	47 SW	47 1/8″ (1197)	19611902
	47 PB	47 1/8″ (1197)	18612002
	47 BZ	47 1/8″ (1197)	18613002
	47 EG	47 1/8″ (1197)	19613002
	47 CS	47 1/8″ (1197)	19613102
	ICA		
	71 SW	71 1/8″ (1807)	19611906
	71 PB	71 1/8″ (1807)	18612006
	71 BZ	71 1/8″ (1807)	18613006
	71 EG	71 1/8″ (1807)	19613006
	71 CS	71 1/8″ (1807)	19613106
	Lineal SW	120″ (3048)	19611898
	PB	120″ (3048)	18611998
	BZ	120″ (3048)	19612899
	EG	120″ (3048)	19612999
	CS	120″ (3048)	19613299

MULL KIT PARTS – MISCELLANEOUS

ILLUSTRATION *NOT TO SCALE*	DESCRIPTION	LENGTH / COLOR	PART NO.
	30° Bay Foam Connector Block *NOTE: 4 needed per unit*	WH	10500108
	45° Bay Foam Connector Block *NOTE: 4 needed per unit*	WH	10500106
	12° Bow Foam Connector Block *NOTE: 6 needed per 4 wide unit, 8 needed per 5 wide unit*	WH	10500105
	Nailing Fin Connector	WH	10500213

MULL KIT PARTS – WOOD

ILLUSTRATION *NOT TO SCALE*	DESCRIPTION	LENGTH/ COLOR	BARE WOOD PART NO.	WHITE WOOD PART NO.
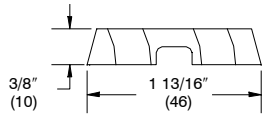	**ICA 30° Bay Interior Trim – Vertical** W1185 CN 71 lineal	70 3/4″ (1797) 96″ (2438)	33734471 33734496	39234471 39234496
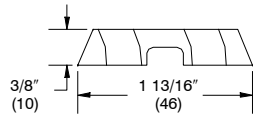	**ICA 45° Bay Interior Trim – Vertical** W1187 CN 71 Lineal	70 3/4″ (1797) 96″ (2430)	33733871 32213596	39233871 39233896
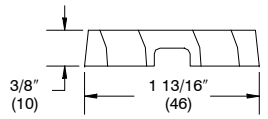	**ICA 12° Bow Interior Trim – Vertical** W1189 CN 71 lineal	70 3/16″ (1783) 96″ (2438)	33733971 33733996	39233971 39233996
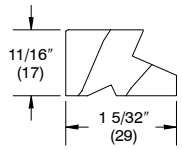	**ICA 12° 5W Bow Return Jamb Extension 4 9/16″** W2138 CN 71 lineal	69 29/32″ (1176) 96″ (2438)	33734771 33734796	39234771 39234796
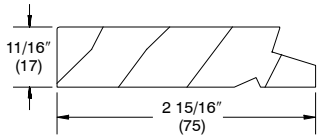	**ICA 12° 5W Bow Return Jamb Extension 6 9/16″** W2141 CN 71 lineal	69 29/32″ (1176) 96″ (2438)	33734871 33734896	39234871 39234896
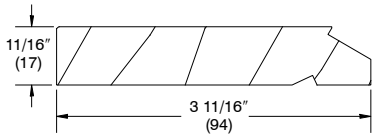	**ICA 30° Bay Return Jamb Extension – 6 13/16″** W2207 CN 71 lineal	70 3/8″ (1788) 96″ (2438)	33744071 33744096	39235071 39235096
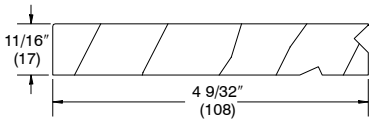	**ICA 45° Bay Return Jamb Extension – 6 13/16″** W2208 CN 71 lineal	70 5/32″ (1782) 96″ (2438)	33744471 33744496	39244471 39244496
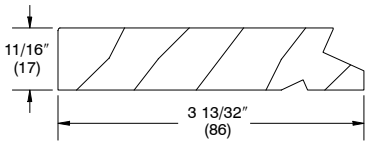	**ICA 12° 5W Bow Return Jamb Extension 6 13/16″** W2209 CN 71 lineal	69 29/32″ (1176) 96″ (2438)	33743671 33743696	39234971 39234996

MULL KIT PARTS – WOOD

ILLUSTRATION *NOT TO SCALE*	DESCRIPTION	LENGTH/ COLOR	BARE WOOD PART NO.	WHITE WOOD PART NO.
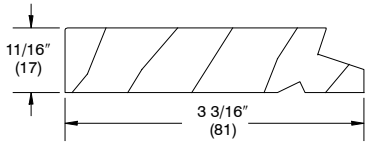	**ICA 12° 4W Bow Return Jamb Extension – 6 13/16″** W2211	CN 71 lineal	70 1/2″ (1791) 96″ (2438)	33733771 33733796	39243671 39243696
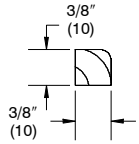	**Horizontal Interior Trim** W7002 *NOTE: For ICA and ITDH Bow and Bay Mull Kits*	80″ (2032)	33732780	39232780
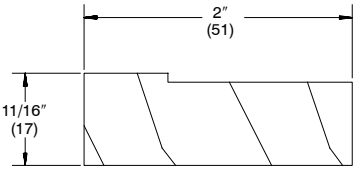	**ICA Bow/Bay Mull Filler** W7006	CN 71 lineal	69 7/8″ (1175) 96″ (2438)	33732771 33732799	Not Applicable
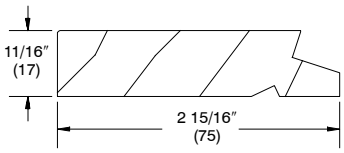	**ICA 12° 4W Bow Return Jamb Extension – 6 9/16″** W7304	CN 71 lineal	70 1/2″ (1791) 96″ (2438)	33735071 33735096	39245071 39245096
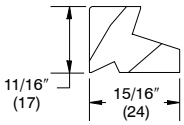	**ICA 12° 4W Bow Return Jamb Extension – 4 9/16″** W7311	CN 71 lineal	70 1/2″ (1791) 96″ (2438)	33733571 33733596	39233571 39233596
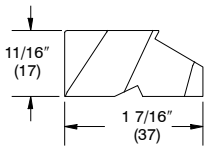	**ICA 30° Bay Return Jamb Extension – 4 9/16″** W7323	CN 71 lineal	70 3/16″ (1783) 96″ (2438)	33734071 33734096	39234071 39234096
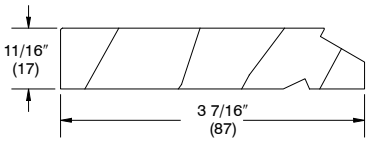	**ICA 30° Bay Return Jamb Extension – 6 9/16″** W7324	CN 71 lineal	70 3/8″ (1788) 96″ (2438)	33734171 33734196	39234171 39234196
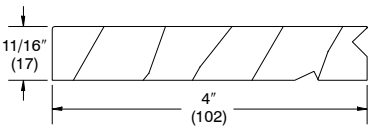	**ICA 45° Bay Return Jamb Extension – 6 9/16″** W8574	CN 71 lineal	70 5/32″ (1782) 96″ (2438)	33735071 33735096	39245071 39245096
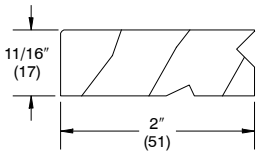	**ICA 45° Bay Return Jamb Extension – 4 9/16″** W8575	CN 71 lineal	70 5/32″ (1782) 96″ (2438)	33734971 33734996	39244971 39244996

MULL KIT PARTS – WOOD

ILLUSTRATION *NOT TO SCALE*	DESCRIPTION	LENGTH/ COLOR	BARE WOOD PART NO.	WHITE WOOD PART NO.
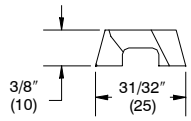	**ITDH 30° Bay Interior Trim – Vertical** W1174 CN76 lineal	75 3/4″ (1924) 96″ (2438)	33734576 33734596	39234576 39234596
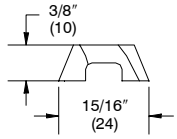	**ITDH 45° Bay Interior Trim– Vertical** W1244 CN76 lineal	75 3/4″ (1924) 96″ (2438)	33733276 33733296	39233276 39233296
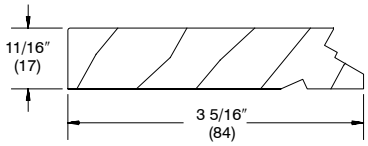	**ITDH 30° Bay Return Jamb Extension – 6 13/16″** W2212 CN72 lineal	71 3/4″ (1822) 96″ (2438)	33744572 33744596	39244372 39244396
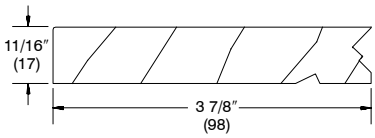	**ITDH 45° Bay Return Jamb Extension – 6 13/16″** W2213	71 3/4″ (1822) 96″ (2438)	33744672 33744696	39245372 39245396
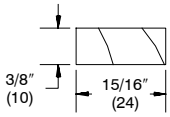	**ITDH Interior Trim – Sill** W6110	80″ (2032)	32214480	39214480
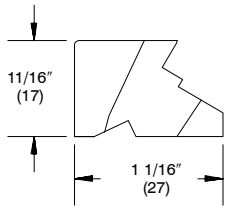	**ITDH 30° Bay Return Jamb Extension – 4 9/16″** W7291 CN72 lineal	72 1/4″ (1835) 96″ (2438)	33734272 33734296	39234272 39234296
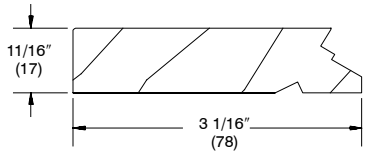	**ITDH 30° Bay Return Jamb Extension – 6 9/16″** W7295 CN72 lineal	72″ (1829) 96″ (2438)	33734372 33734396	39234372 39234396

MULL KIT PARTS – WOOD

ILLUSTRATION *NOT TO SCALE*	DESCRIPTION	LENGTH/ COLOR	BARE WOOD PART NO.	WHITE WOOD PART NO.
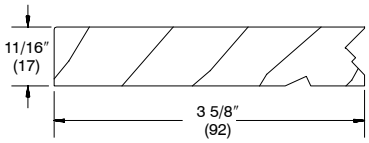	**ITDH 45° Bay Return Jamb Extension – 6 9/16″** W7328			
	CN72 lineal	72″ (1829) 96″ (2438)	33733172 33733195	39233172 39233195
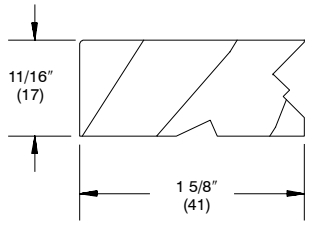	**ITDH 45° Bay Return Jamb Extension – 4 9/16″** W7329			
	CN72 lineal	72″ (1829) 96″ (2438)	33733072 33733096	39233072 39233096

ORDERING HEAD AND SEAT BOARD BLANKS

When ordering head and seat board blanks specify:

1. Description;
2. Board Size;
3. CN Width;
4. Part Number;
5. Bare wood or interior

NOTE: Listed below are the available stock sizes of head and seat board blanks. Find the board size based on CN width. Construction is exterior grade 3/4″ plywood with clear pine veneer finish and interior edge. Head and seat boards listed will accommodate 4 9/16″ or 6 9/16″ jamb extensions only. ***Numbers listed below are for one blank only.***

Board Size	Bare Wood Part No.	White Interior Part No.	Board Size	Bare Wood Part No.	White Interior Part No.
16x80	18218203	39218203	24x84	18218904	39218904
16x96	18218204	39218204	26x84	18219002	39219002
18x99	18218405	39218405	27x120	18219104	39219104
21x118	18218650	39218650	28x96	18219202	39219202
22x84	18218704	39218704	28x108	18219204	39219204
24x72	18218902	39218902	30x144	18219306	39219306

CASEMENT BAYS			
30 Degree		45 Degree	
CN Width	Board Size	CN Width	Board Size
17-17-17	24x72	17-17-17	24x72
17-21-17	24x72	17-21-17	24x72
17-25-17	24x72	17-25-17	24x72
17-29-17	24x72	17-29-17	24x72
17-33-17	24x72	17-33-17	24x72
17-37-17	24x72	17-37-17	24x72
17-49-17	24x84	17-49-17	24x72
21-21-21	24x72	21-21-21	24x72
21-25-21	24x72	21-25-21	24x72
21-29-21	24x72	21-29-21	24x72
21-33-21	24x72	21-33-21	24x72
21-37-21	24x84	21-37-21	24x72
21-49-21	28x96	21-49-21	24x84
21-57-21	28x96	21-57-21	28x96
21-73-21	21x118	21-73-21	28x108
25-25-25	24x72	25-25-25	26x84
25-29-25	22x84	25-29-25	26x84
25-33-25	24x84	25-33-25	28x96
25-37-25	24x84	25-37-25	28x96
25-49-25	28x96	25-49-25	28x96
25-57-25	28x108	25-57-25	28x108
29-29-29	22x84	29-29-29	28x96
29-33-29	24x84	29-33-29	28x96
29-37-29	28x96	29-37-29	28x96
29-49-29	28x108	29-49-29	28x96
29-57-29	28x108	29-57-29	28x108
33-33-33	28x96		
33-37-33	28x96		
33-49-33	28x108		

CASEMENT BOWS			
4 Wide		5 Wide	
CN Width	Board Size	CN Width	Board Size
17-4W	16x96	17-5W	22X84
21-4W	16x96	21-5W	21X118
25-4W	28x108	25-5W	27X120
29-4W	27x120		

DOUBLE HUNG BAYS			
30 Degree		45 Degree	
CN Width	Board Size	CN Width	Board Size
22-22-22	24x72	22-22-22	24x72
22-26-22	24x72	22-26-22	24x72
22-30-22	24x72	22-30-22	24x72
22-34-22	22x84	22-34-22	24x72
22-36-22	22x84	22-36-22	24x84
22-38-22	22x84	22-38-22	24x84
22-42-22	22x84	22-42-22	24x84
22-50-22	28x96	22-50-22	28x96
22-54-22	28x96	22-54-22	28x96
22-62-22	28x108	22-62-22	28x108
26-26-26	22x84	26-26-26	26x84
26-30-26	22x84	26-30-26	26x84
26-34-26	22x84	26-34-26	26x84
26-36-26	28x96	26-36-26	26x84
26-38-26	28x96	26-38-26	26x84
26-42-26	28x96	26-42-26	28x96
26-50-26	28x108	26-50-26	28x96
26-54-26	28x108	26-54-26	28x108
26-62-26	21x118	26-62-26	28x108
30-30-30	28x96	30-30-30*	28x96
30-34-30	28x96	30-34-30*	28x96
30-36-30	28x96	30-36-30*	28x96
30-38-30	28x96	30-38-30*	28x96
30-42-30	28x108	30-42-30*	28x96
30-50-30	28x108	30-50-30*	28x108
30-54-30	27x120	30-54-30*	28x108
34-34-34	28x108	30-62-30*	30x144
34-36-34	28x108		
34-38-34	28x108		
34-42-34	21x118		
34-50-34	28x108		
36-36-36	28x108		
36-38-36	28x108		
36-42-36	28x108		
38-38-38	28x108		
38-42-38	30x144		

* For 4 9/16″ jamb extension only.

OBSOLETE PARTS

ILLUSTRATION *NOT TO SCALE*	DESCRIPTION		LENGTH	PART NO.
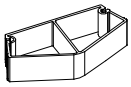	**30 Degree Bay Connector** A168			
	ICA	47 AR	47 1/8″ (1197)	18613247
		71 AR	71 1/8″ (1807)	18613271
	ITDH	48 AR	47 3/4″ (1213)	18613448
		72 AR	71 3/4″ (1822)	18613472
	Lineal	AR	120″ (3048)	18613098
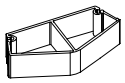	**45 Degree Bay Connector** A167			
	ICA	47 AR	47 1/8″ (1197)	18611702
		71 AR	71 1/8″ (1807)	18611706
	ITDH	48 AR	47 3/4″ (1213)	18611711
		72 AR	71 3/4″ (1822)	18611714
	Lineal	AR	150″ (3810)	18611699
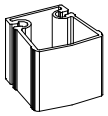	**12 Degree Connector** A166			
	ICA	CN 47 AR	47 1/8″ (1197)	18611902
		CN 71 AR	71 1/8″ (1807)	18611906
		Lineal AR	120″ (3048)	18611898

ILLUSTRATION *NOT TO SCALE*	DESCRIPTION		LENGTH/ COLOR	BARE WOOD PART NO.	PREFINISH WOOD PART NO.
Double Hung 30 Degree Bay Mull Kits	**4 9/16 Jamb Extension**	SW	CN 48	11895648	39265648
		PB	CN 48	11898348	39268348
		SW	CN 72	11895672	39265672
		PB	CN 72	11898372	39268372
	6 9/16 Jamb Extension	SW	CN 48	11895748	39265748
		PB	CN 48	11898548	39268548
		SW	CN 72	11895772	39265772
		PB	CN 72	11898572	39268572
	6 13/16 Jamb Extension	SW	CN 48	11895848	39265848
		PB	CN 48	11899348	39269348
		SW	CN 72	11895872	39265872
		PB	CN 72	11899372	39269372
Double Hung 45 Degree Bay Mull Kits	**4 9/16 Jamb Extension**	SW	CN 48	11895348	39255348
		PB	CN 48	11899648	39259648
		SW	CN 72	11895372	39255372
		PB	CN 72	11899672	39259672
	6 9/16 Jamb Extension	SW	CN 48	11895448	39255448
		PB	CN 48	11899848	39259848
		SW	CN 72	11895472	39255472
		PB	CN 72	11899872	39259872
	6 13/16 Jamb Extension	SW	CN 48	11895548	39255548
		PB	CN 48	11896148	39266148
		SW	CN 72	11895572	39255572
		PB	CN 72	11896172	39266172