CHAPTER 13

INTEGRITY ALL ULTREX CASEMENT
ALL ULTREX SWINGING WINDOW PICTURE (IFSLP)
ALL ULTREX SWINGING WINDOW TRANSOM (IFSLT)

Table of Contents

	PAGE
History	13.2
Part Identification – Operator	13.3
Part Identification – Stationary/Picture/Transom	13.4
Parts	
Hardware	13.5
Vinyl Parts	13.8
Weather Strip	13.10
Sash Replacement	13.11
Screens and Screen Parts	13.12
Service	
Installing the Roto–Gear Handle	13.13
Removing and Installing the Screen	13.13
Installing the Casement Operator Sash	13.14
Removing the Casement Operator Sash	13.15
Removing Stationary Sash	13.16
Replacing Stationary Sash	13.17

ATTENTION:

- Specification and technical data are subject to change without notice.
- Numbers listed in parentheses ( ) are metric equivalents in millimeters rounded to the nearest whole number.

HISTORY

PRODUCED	UNIT TYPE	FEATURES OR CHANGES	STATUS
February 2010	Casement	Introduced the All Ultrex Casement product.	Current
December 2010	Casement	Introduced the Coastal Hardware option	Current
March 2011	Casement	Updated Bottom Sill Cover Profile	Current
October 2012	Casement	October 29, 2012: Introduced All Ultrex Expanded Sizes and Mulls.	Current

PART IDENTIFICATION

CASEMENT OPERATOR

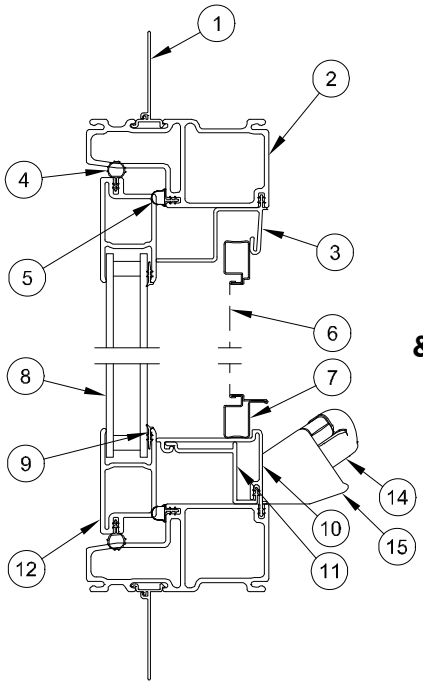

HEAD JAMB & SILL DETAIL

JAMB DETAIL

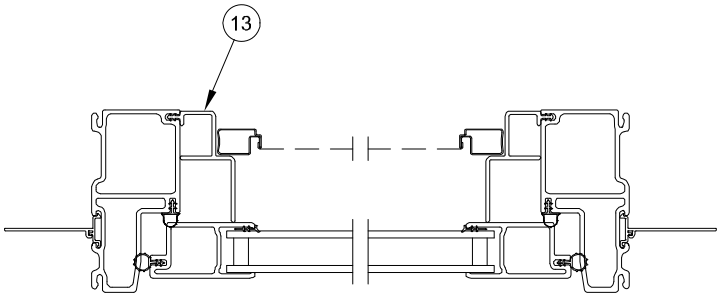

NOTE: Not to scale; specifications subject to change without notice.

1. Nail Fin, Locking
2. Frame
3. Frame Cover Head Jamb
4. Sash Weather Strip
5. Foam Weather Strip
6. Screen Mesh
7. Screen Frame
8. Insulated Glass
9. Glazing Boot, Sash
10. Frame Cover,Sill, Top
11. Frame Cover, Sill, Bottom
12. Sash
13. Frame Cover, Jamb
14. Roto Gear Folding Handle
15. Roto Gear Assembly

PART IDENTIFICATION

CASEMENT
STATIONARY / PICTURE / TRANSOM

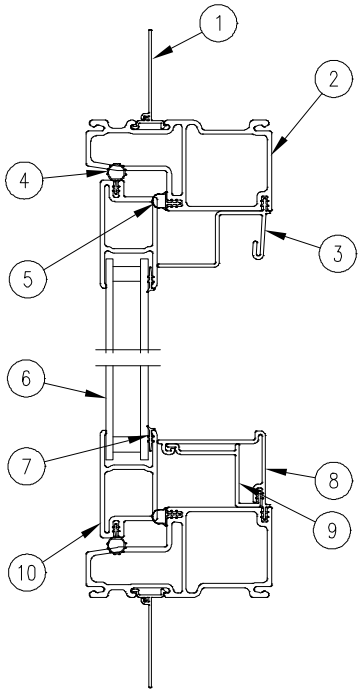

HEAD JAMB & SILL DETAIL

JAMB DETAIL

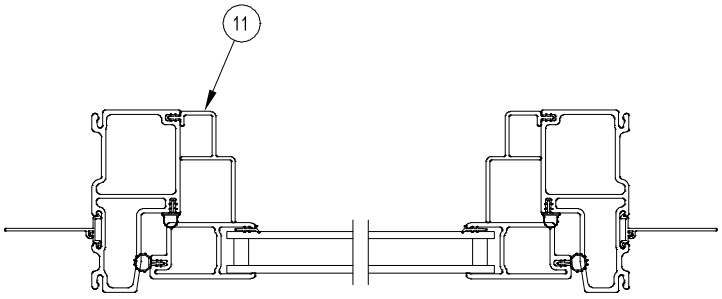

NOTE: Not to scale; specifications subject to change without notice.

1. Nail Fin, Locking
2. Frame
3. Frame Cover, Head Jamb
4. Sash Weather Strip
5. Foam Weather Strip
6. Insulated Glass
7. Glazing Boot Sash
8. Frame Cover, Sill, Top
9. Frame Cover, Sill, Bottom
10. Sash
11. Frame Cover, Jamb

When ordering replacement HARDWARE parts specify:

1. Type of unit; Part number; Description; Color; Handing (if applicable)

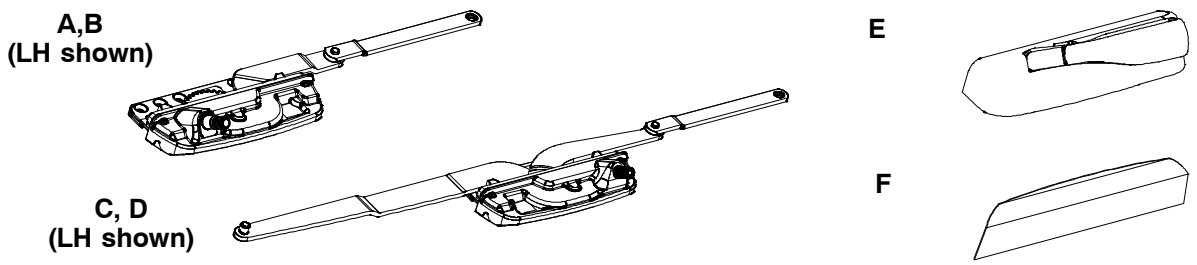

Description				Part Number
A: Dyad Operator Roto-gear includes fasteners: *4 – #8x7/8″, PH, Flat, AB, ZYC*	Used on: CN16 and 20		RH	10896280
			LH	10893279
B: Dyad Operator Roto-gear, Coastal includes fasteners: *4 – #8x7/8″, PH, Flat, AB, ZYC*	Used on: CN16 and 20		RH	11862611
			LH	11862610
C: Dual Arm Operator Roto-gear includes fasteners: *4 – #8x7/8″, PH, Flat, AB, ZYC*	Used on: CN26 and 30		RH	10896282
			LH	10896281
D: Dual Arm Operator Roto-gear Coastal includes fasteners: *4 – #8x7/8″, PH, Flat, AB, ZYC*	Used on: CN26 and 30		RH	11862606
			LH	11862605
E: Folding Handle/Cover	Dyad	AF	LH	10896250
	Used on: CN16 and CN20	AF	RH	10896251
	Custom sizes less than 28″	WH	LH	10896253
		WH	RH	10896254
		ORBZ	LH	10896303
		ORBZ	RH	10896306
		SN	LH	10896302
		SN	RH	10896305
		BS	LH	10896301
		BS	RH	10896304
		AF	LH	10896251
	Dual Arm	AF	RH	10896250
	Used on: CN26 and CN30	WH	LH	10896254
	Custom sizes 28″ and greater	WH	RH	10896253
		ORBZ	LH	10896306
		ORBZ	RH	10896303
		SN	LH	10896305
		SN	RH	10896302
		BS	LH	10896304
		BS	RH	10896301
F: Encore Undercover	For the underside of the roto–gear		WH	10880184
			AF	10880185
			SN	10880186
			BS	10880187
			ORBZ	10880188

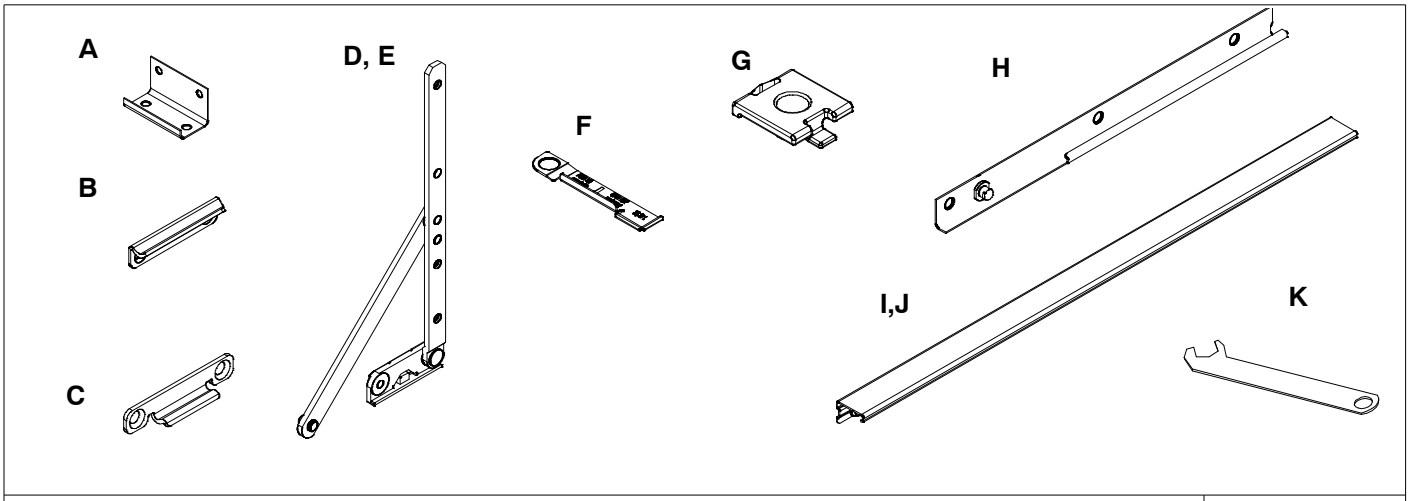

Description			Part Number
A: Stationary Bracket includes fasteners: *2 – 5/32″ (4) X 9/16 (14)″ peel rivets*			11881080
B: Concealed Snubber Frame includes fasteners: *2 – 5/32″ (4) X 9/16 (14)″ peel rivets*			11881082
C: Sash Snubber includes fasteners: *2 – 5/32″ (4) X 9/16 (14)″ peel rivets*			11881081
D: Hinge Arm Assembly includes fasteners: *4 –#7x 5/8″ AB–17, Steel w/ZYC*		UL–LR LL–UR	10814755 10814754
E: Hinge Arm Assembly, Coastal includes fasteners: *4 –#7x 5/8″ AB–17, 410 Stainless*		UL–LR LL–UR	11862624 11862623
F: Hinge Limiter	SS SS	RH LH	11862601 11862602
G: Guide Track Shoe			10896277
H: Adjustable Hinge Track	SS SS	UL–LR LL–UR	10896284 10896283
I: Guide Track includes fasteners: *3 –#7x 5/8″ AB–17, Steel w/ZYC*			10896276
J: Guide Track, Coastal includes fasteners: *3 –#7x 5/8″ AB–17, 410 Stainless*			11862607
K: 3/8″ Open Ended Wrench			10814840

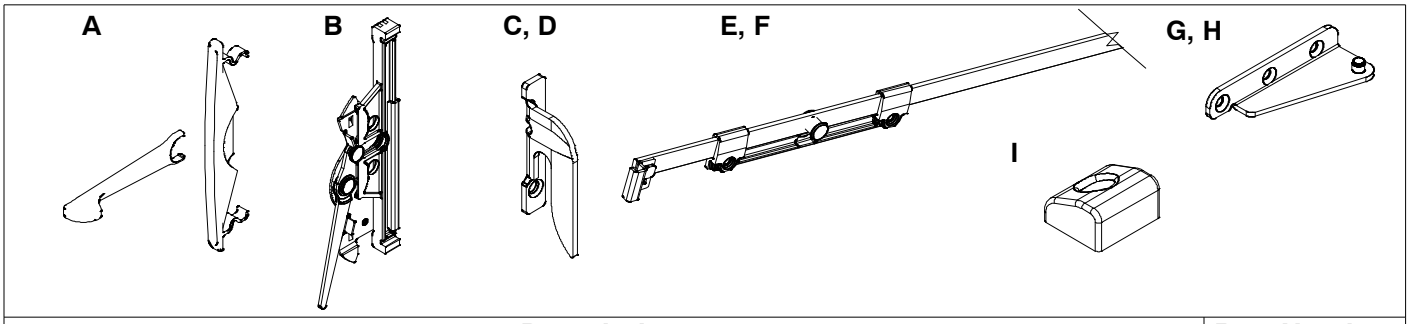

Description			Part Number
A: Lock Drive Handle and Escutcheon		AF	10896269
		WH	10896268
		ORBZ	10896309
		SN	10896308
		BS	10896307
B: Lock Drive Assembly includes fasteners: *2 – 1/8″ (3) X 19/32″ (15) peel rivets*			11881083
C: Keeper includes fasteners: *2 – #7–19x5/8″* Type AB–17 Full, E–Gard, Steel w/ZYC	Order Quantity Needed	RH	10896267
		LH	10896266
D: Keeper, Coastal includes fasteners: *2 – #7–19x5/8″* Type AB–17 Full, 410 Stainless	Order Quantity Needed	RH	11862613
		LH	11862614
E: Tie Bar Assembly includes fasteners: *2, 4 or 6 – 1/8″(3)X19/32″ (15)5056 Aluminum peel rivets*	Used on: CN 20,26		10896255
	CN 30,36		10896256
	CN 40,46		10896257
	CN 50		10896258
	CN 56		10896259
	CN 60		10896260
F: Tie Bar Assembly, Coastal includes fasteners: *2, 4 or 6 – 1/8″(3)X19/32″ (15)5056 Aluminum peel rivets*	Used on: CN 20,26		11862615
	CN 30,36		11862616
	CN 40,46		11862617
	CN 50		11862618
	CN 56		11862619
	CN 60		11862620
G: Stud Bracket includes fasteners: *3 – #7–19x5/8″* AB–17, E–Gard, Steel w/ZYC		RH	10896264
		LH	10896263
H: Stud Bracket, Coastal includes fasteners: *3 – #7–19x5/8″* AB–17, 410 Stainless Steel		RH	11862609
		LH	11862608
I: Casement Hinge Lift			11862631

When ordering replacement FRAME SILL COVERS specify:

1. Profile number; Part number; Length; Handing (if applicable)

V1989 – Frame Cover Sill Top, Operator

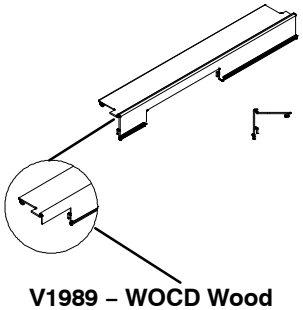

V1989 – WOCD Wood Secondary Sill Cover

V1990 – Frame Cover Sill Bottom, Operator

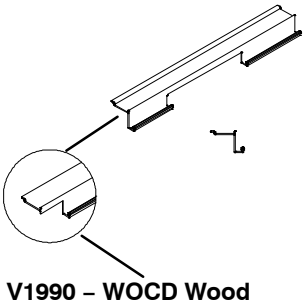

V1990 – WOCD Wood Secondary Sill Cover

V1989 – Frame Cover Sill, Top, Stationary

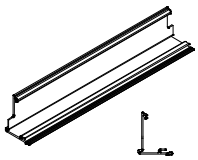

V1990 – Frame Cover Sill, Bottom, Stationary

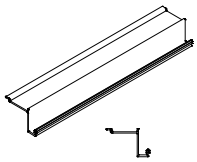

Description	Length	CN	RH PN	LH PN
Frame Cover Kit, Operator	13 5/16″ (338)	CN16	11881094	11881093
Includes:	19 5/16″ (490)	CN20	11881096	11881095
1 – V1989 top operator	25 5/16″ (643)	CN26	11881098	11881097
1 – V1990 bottom operator	31 5/16″ (795)	CN30	11881070	11881099
Frame Cover Kit, Operator, WOCD	NA	CN16	NA	NA
Includes:	19 5/16″ (490)	CN20	11881196	11881195
1 – V1989 top operator, WOCD	25 5/16″ (643)	CN26	11881198	11881197
1 – V1990 bottom operator, WOCD	31 5/16″ (795)	CN30	11881200	11881199

Description	Length	CN	Part Number
Frame Cover Kit, Stationary	13 5/16″ (338)	CN16	11881077
Includes:	19 5/16″ (490)	CN20	11881078
1 – V1989 top stationary	25 5/16″ (643)	CN26	11881079
1 – V1990 bottom stationary	31 5/16″ (795)	CN30	11881060
	37 5/16″ (947)	CN36	11881061
	43 5/16″ (1100)	CN40	11881062
	55 5/16″ (1405)	CN 50	11881063
	67 5/16″ (1709)	CN60	11881064

When ordering replacement FRAME COVER parts specify:

1. Profile number; Part number; Length; Handing (if applicable)

V1899 – Head Jamb, Frame Cover

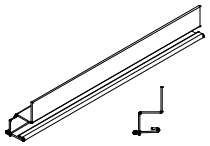

V1900 – Frame Cover Jamb Stat/Hinge Side

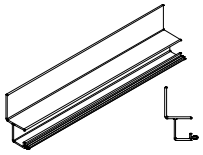

V1900 – Frame Cover Jamb Lock Side

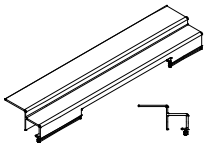

V1900 – WOCD Secondary Locking Jamb Cover

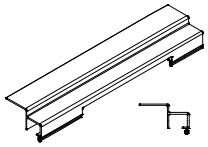

Description	Length	CN	RH PN	LH PN
Frame Cover, Jamb Lock Side, V1900	20 1/2″ (521)	CN20	17008020	17008021
	26 1/2″ (673)	CN26	17008026	17008027
	32 1/2″ (826)	CN30	17008032	17008033
	38 1/2″ (978)	CN36	17008038	17008039
	44 1/2″ (1130)	CN40	17008044	17008045
	50 1/2″ (1283)	CN46	17008050	17008051
	56 1/2″ (1435)	CN50	17008056	17008057
	62 1/2″ (1588)	CN56	17008062	17008063
	68 1/2″ (1740)	CN60	17008068	17008069
WOCD Secondary Locking Jamb Cover V1900	19 25/32″ (502)	CN20	17002720	17002721
	25 25/32″ (654)	CN26	17002726	17002727
	31 25/32″ (807)	CN30	17002732	17002733
	37 25/32″ (959)	CN36	17002738	17002739
	43 25/32″ (1112)	CN40	17002744	17002745
	49 25/32″ (1264)	CN46	17002750	17002751
	55 25/32″ (1416)	CN50	17002756	17002757
	61 25/32″ (1569)	CN56	17002762	17002763
	67 25/32″ (1721)	CN60	17002768	17002769
Frame Cover Jamb Stat/Hinge Side V1900	8 1/2″ (216)	CN10	17006008	
	14 1/2″ (368)	CN16	17006014	
	20 1/2″ (521)	CN20	17006020	
	26 1/2″ (673)	CN26	17006026	
	32 1/2″ (826)	CN30	17006032	
	38 1/2″ (978)	CN36	17006038	
	44 1/2″ (1130)	CN40	17006044	
	50 1/2″ (1283)	CN46	17006050	
	56 1/2″ (1435)	CN50	17006056	
	62 1/2″ (1588)	CN56	17006062	
	68 1/2″ (1740)	CN60	17006068	

Description	Length	CN	Part Number
Frame Cover Head Jamb V1899	13 5/16″ (338)	CN16	17003013
	19 5/16″ (490)	CN20	17003019
	25 5/16″ (643)	CN26	17003025
	31 5/16″ (795)	CN30	17003031
	37 5/16″ (947)	CN36	17003037
	43 5/16″ (1100)	CN40	17003043
	55 5/16″ (1405)	CN50	17003055
	67 5/16″ (1709)	CN60	17003067

WEATHER STRIP

When ordering replacement WEATHER STRIP specify:

1. Description; Profile number; Part number; Quantity

A V189 Frame Weather Strip

B V147 Sash Weather Strip

Description				Part Number
A: V189 Frame Weather Strip	9 1/8″ (232)	CN10	BK	17013009
	15 1/8″ (384)	CN16	BK	17013015
	21 1/8″ (536)	CN20	BK	17013021
	27 1/8″ (689)	CN26	BK	17013027
	33 1/8″ (841)	CN30	BK	17013033
	39 1/8″ (994)	CN36	BK	17013039
	45 1/8″ (1146)	CN40	BK	17013045
	51 1/8″ (1298)	CN46	BK	17013051
	57 1/8″ (1451)	CN50	BK	17013057
	63 1/8″ (1603)	CN56	BK	17013063
	69 1/8″ (1756)	CN60	BK	17013069
B: V147 Sash Weather Strip	9 1/2″ (241)	CN10	BK	17001410
	15 1/2″ (394)	CN16	BK	17001416
	21 1/2″ (546)	CN20	BK	17001420
	27 1/2″ (698)	CN26	BK	17001426
	33 1/2″ (851)	CN30	BK	17001430
	39 1/2″ (1003)	CN36	BK	17001436
	45 1/2″ (1156)	CN40	BK	17001440
	51 1/2″ (1308)	CN46	BK	17001446
	57 1/2″ (1460)	CN50	BK	17001450
	63 1/2″ (1613)	CN56	BK	17001456
	69 1/2″ (1765)	CN60	BK	17001460

When ordering replacement SASH specify:

1. Size (using chart below);
2. Operating, stationary, transom or picture, left or right operator (if applicable);
3. Stone White (SW), Pebble Gray (PB), Bronze (BZ), Evergreen (EG), Cashmere (CA), Ebony (EB) exterior;
4. Glazing;

Sash Sizes for Casement Manufactured 2010 to Present

Daylight Opening to Sash OM

Daylight Width + 3 17/32″ = OM Width of Sash
Daylight Height + 3 17/32″ = OM Height of Sash

NOTE: Casement sash is not reglazable. Replacement sash will include all hardware..

Size	OM Width	
CN16	15 17/32″	(420)
CN20	21 17/32″	(521)
CN26	27 17/32″	(674)
CN30	33 17/32″	(775)
CN36	39 17/32″	(928)
CN40	45 17/32″	(1029)
CN50	57 17/32″	(1283)
CN60	69 17/32″	(1537)

Size	OM Height	
CN10	9 17/32″	(267)
CN16	15 17/32″	(420)
CN20	21 17/32″	(521)
CN26	27 17/32″	(674)
CN30	33 17/32″	(775)
CN36	39 17/32″	(928)
CN40	45 17/32″	(1029)
CN46	51 17/32″	(1182)
CN50	57 17/32″	(1283)
CN56	63 17/32″	(1436)
CN60	69 17/32″	(1537)

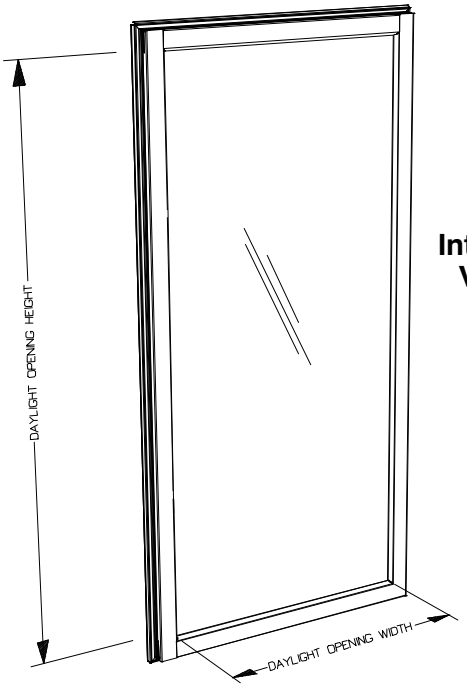

Interior View

Casement

NOTE: The daylight opening is the interior measurement of visible glass.

ORDERING REPLACEMENT SCREENS FOR CASEMENT UNITS

Standard screens offer almond frost aluminum surround and charcoal colored fiberglass 18 x 16 screen mesh. Determine the outside measurement (OM) of the existing screen. Find the sizes that correspond to the width and height indicated on the following chart.

When ordering replacement screen specify:

1. Size; – measure the existing screen OM, if not available, determine the size of the screen by using the conversion chart below shown below.

Screen Sizes for the All Ultrex Casement

Manufactured 2010 to Present
Daylight Opening to OM of Screen

Daylight opening is the measurement of the visible glass.
Daylight Width + 1 13/32″ (36)= OM Width of Screen
Daylight Height + 1 1/64″ (26) = OM Height of Screen

NOTE: OM of aluminum screen includes corner keys.

NOTE: Screens feature leaf spring mounting system.

Size	OM Width	
CN16	13 15/64″	(336)
CN20	19 15/64″	(489)
CN26	25 15/64″	(641)
CN30	31 15/64″	(793)
CN36	37 15/64″	(946)
CN40	43 15/64″	(1098)

Size	OM Height	
CN20	18 53/64″	(478)
CN26	24 53/64″	(631)
CN30	30 53/64″	(783)
CN36	36 53/64″	(936)
CN40	42 53/64″	(1088)
CN46	48 53/64″	(1240)
CN50	54 53/64″	(1393)
CN56	60 53/64″	(1545)
CN60	66 53/64″	(1698)

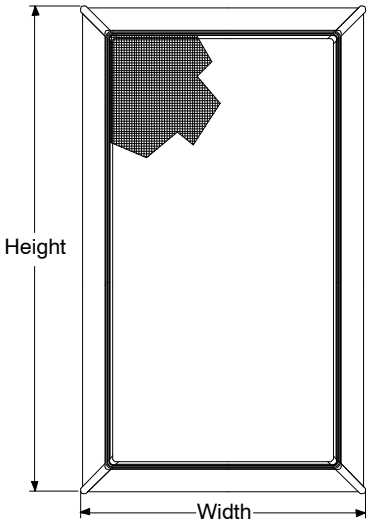

ILLUSTRATION *NOT TO SCALE*	DESCRIPTION	OPER./ COLOR	PART NO.
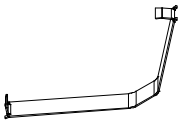	**Leaf Spring**	SS	313430

INSTALLING THE ROTO–GEAR HANDLE

1. Use a small flathead screwdriver to loosen the set screw in the handle. See figure 1a.
2. Slide the handle onto the spline. Be sure it is fully seated by pushing toward the window until the handle rests on the crank assembly. See figure 1b.
3. Tighten the set screw using the flathead screwdriver. See figure 1c.
4. Fold the handle into the recessed area on the cover. See figure 1d.

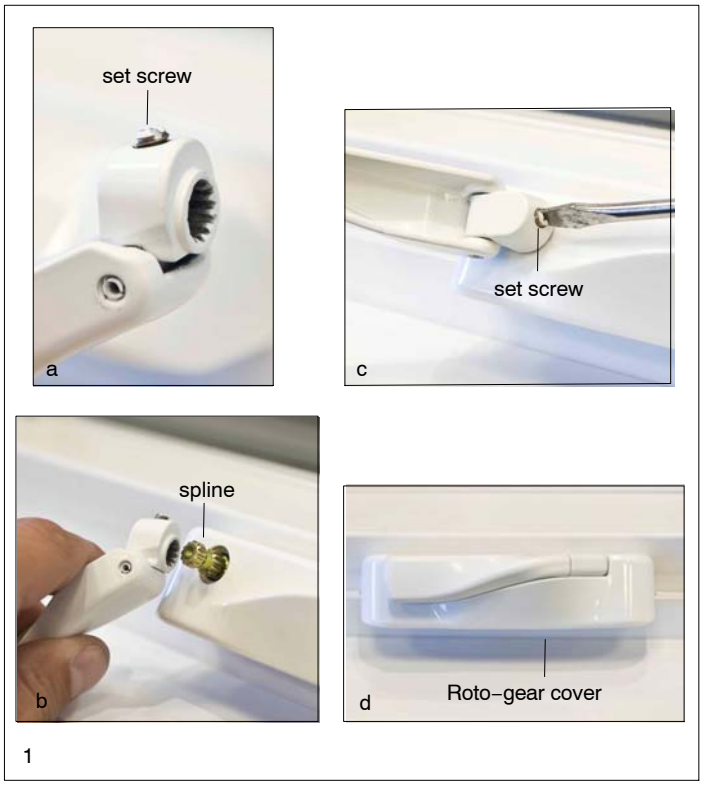

REMOVING AND INSTALLING THE SCREEN

1. To remove the screen, grasp the plunger bolts, and pull toward the center. Bring the screen towards you and lift upward, removing the screen from the channel.
2. To install the screen, set it into the screen channel. Grasp the plunger bolts, pulling them toward the center and pushing the screen tight against the frame. Release the plungers to lock them into the receptacles.

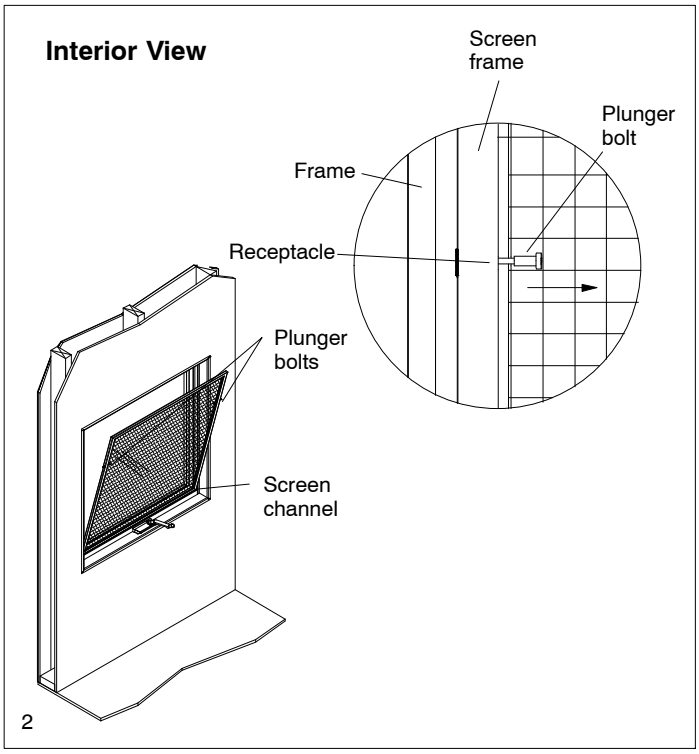

INSTALLING THE CASEMENT OPERATOR SASH

1. Place the guide track shoes on the top and bottom track near the hinge track stud. Slide the shoes into the hinge track, making sure both the top and bottom shoe enter the track. See figure 1.

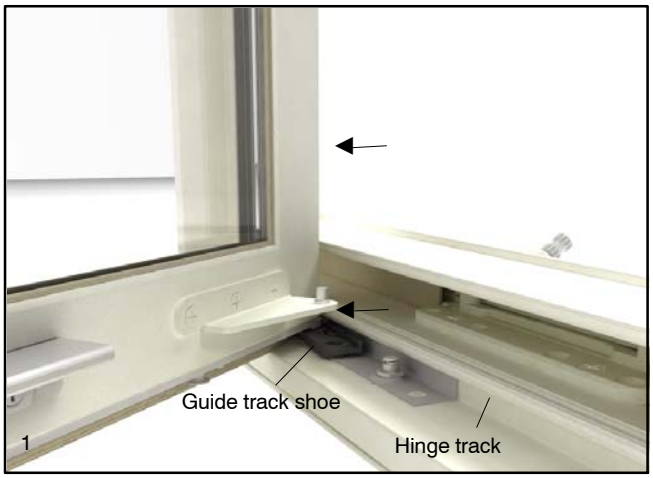

2. Do not release the sash until the hinge arms (top and bottom) have been attached to the hinge track stud by pushing or tapping the arm onto the hinge track stud. See figure 2.

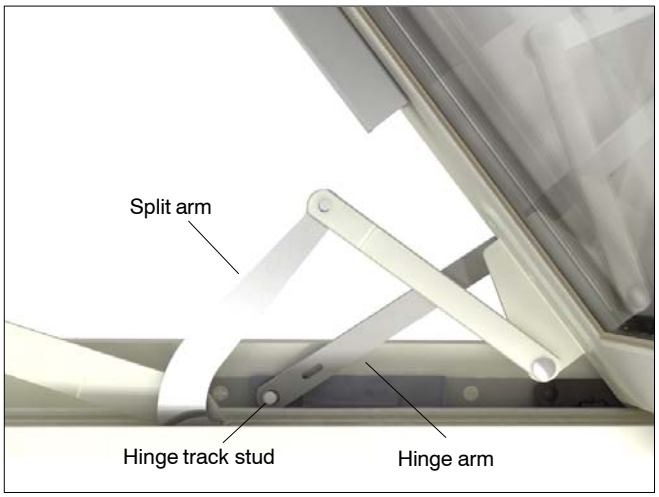

3. Crank the hardware until the straight arm is positioned at the guide track and attach the arm to the black plastic slider. See figure 3.

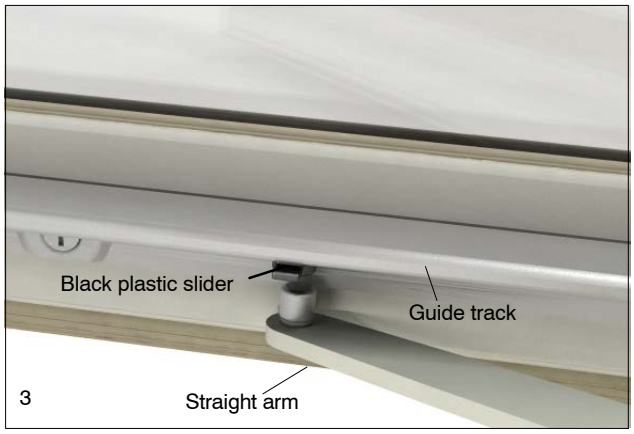

4. Push the split arm onto the sash stud bracket. See figure 4.

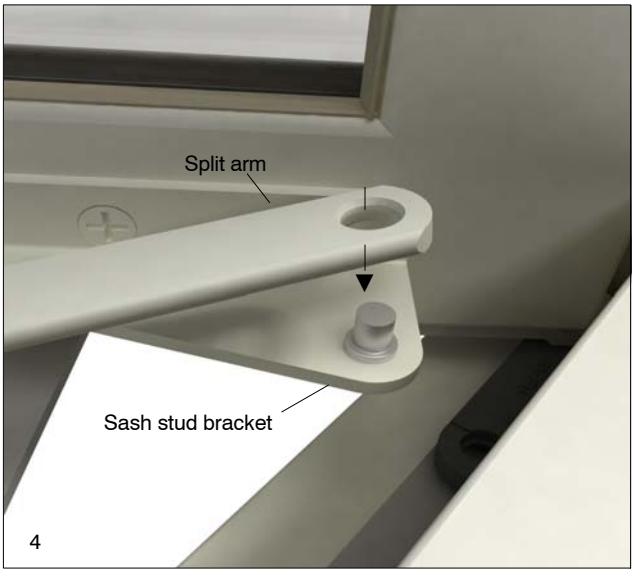

5. Check for proper sash operation.

REMOVING THE CASEMENT OPERATOR SASH

1. Release the lock handle. See figure 1a. Crank the unit open. Detach the roto–gear straight arm by pushing down near the guide track. See figure 1b.

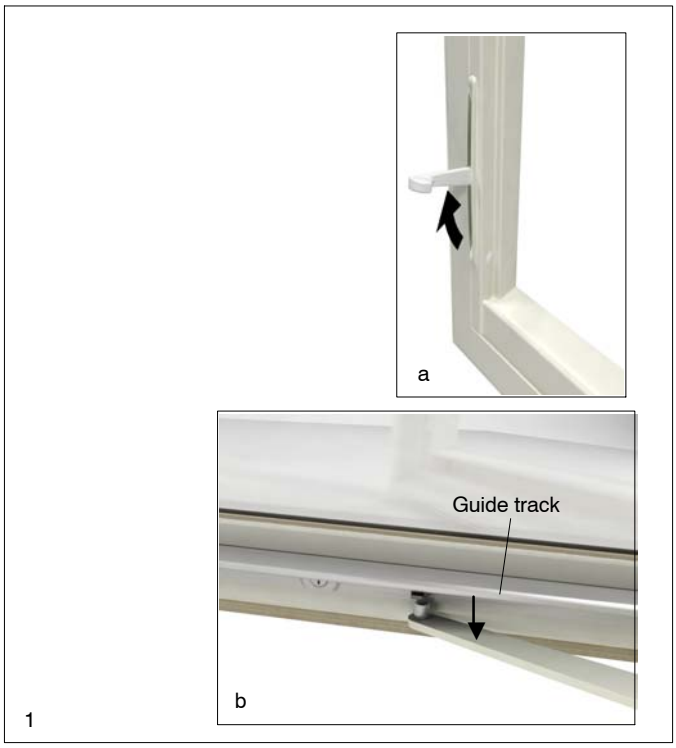

2. Detach the roto–gear split arm from the sash stud bracket. See figure 2. Crank the roto–gear until it is completely open and fold the split arm away.

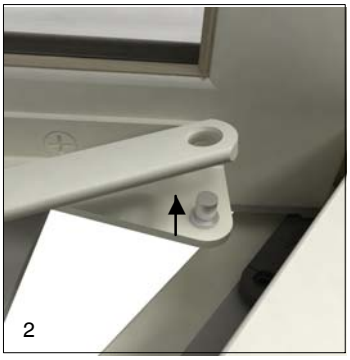

CAUTION: Before accomplishing the next step(s) it is important to have a firm grip on the sash to prevent it from sliding when the hinge arms are released.

3. Pry the lower hinge arm off the hinge track stud using a screwdriver blade. See figure 3a.

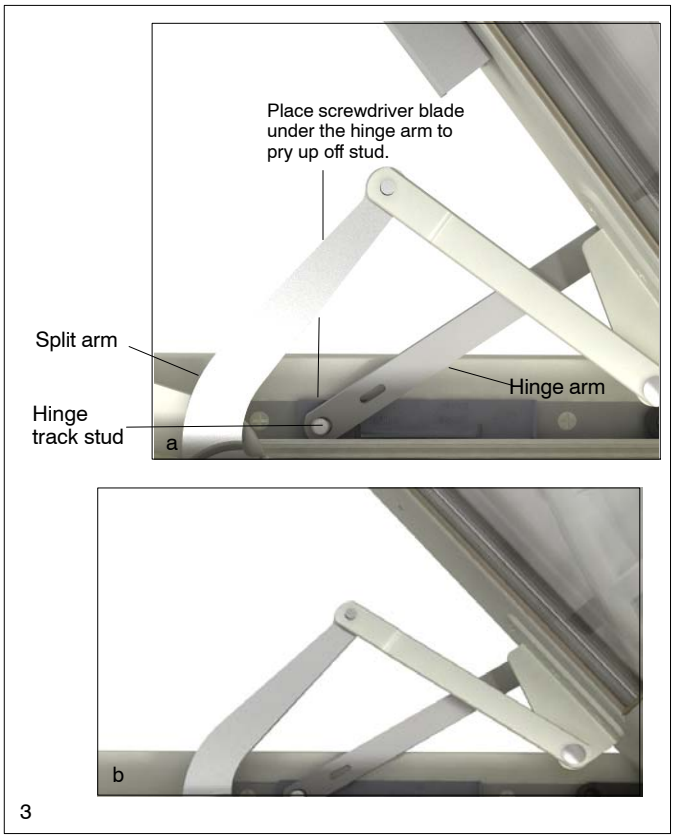

NOTE: CN17 and CN21 will have only the split arm as shown in figure 3b.

NOTE: All CN33 wide and CN37 wide casement windows utilize a hinge limiter which stops the sash at the recommended maximum unit opening. The limiter can be pivoted out to allow full sash opening for cleaning or washing the exterior. The limiter must be pivoted back in place to fully close window.

CAUTION: Sash can be very heavy and hard to handle when removed from the hinge tracks. Use the assistance of another individual when necessary.

4. Slide the guide track shoes out of the tracks toward the center of the unit to remove the sash. See figure 4.

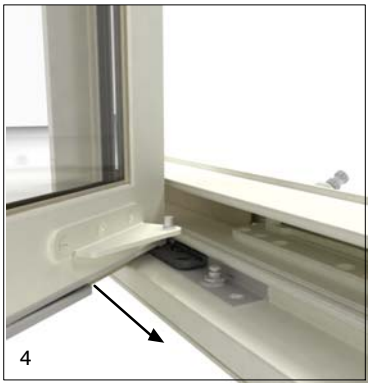

SERVICE – STATIONARY SASH REMOVAL

NOTE: Assistance of another individual is highly recommended when removing and replacing Integrity Casement stationary sash or the use of a handling suction cup.

You Will Need to Supply

Stiff blade putty knife
#2 Phillips screwdriver

Parts Needed

Stationary bracket
Hardware cover
Head jamb and jamb stop (V1900)
Frame weather strip (V189)

Removing Casement Stationary Sash

1. With a small pry bar or stiff putty knife, remove the interior wood stops in the following order: stationary hardware cover, head jamb stop, and jamb stop. Be careful not to damage frame, cover, or jamb stops. See illustration 1.

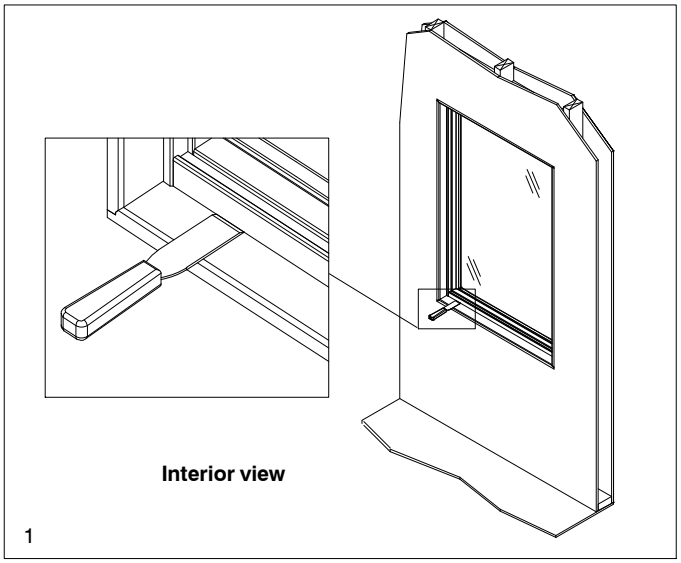

1

CAUTION: Before removing stationary bracket screws, enlist the help of another individual or use glass handling suction cups to prevent sash from falling out of frame.

2. Using a #2 Phillips screwdriver, remove the two screws from each stationary bracket. Save these screws for reinstallation of sash. See illustration 2.

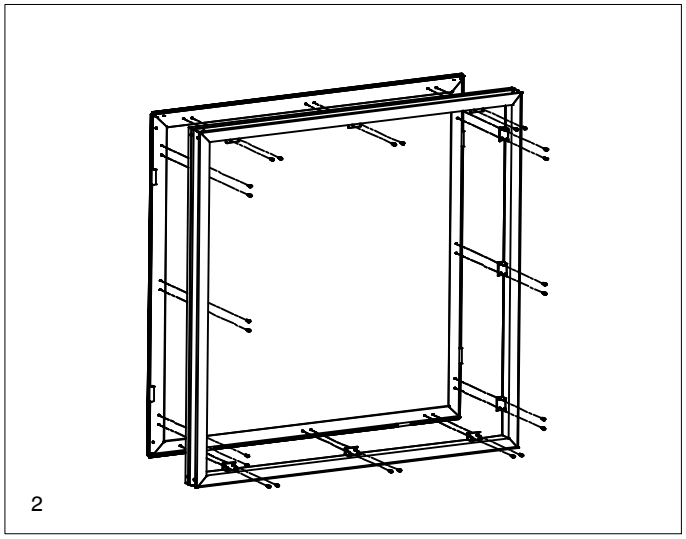

2

3. Carefully remove the stationary sash from the exterior (with assistance) or with glass handling suction cups, push the sash out, rotate, then pull the sash in from the interior. See illustration 3.

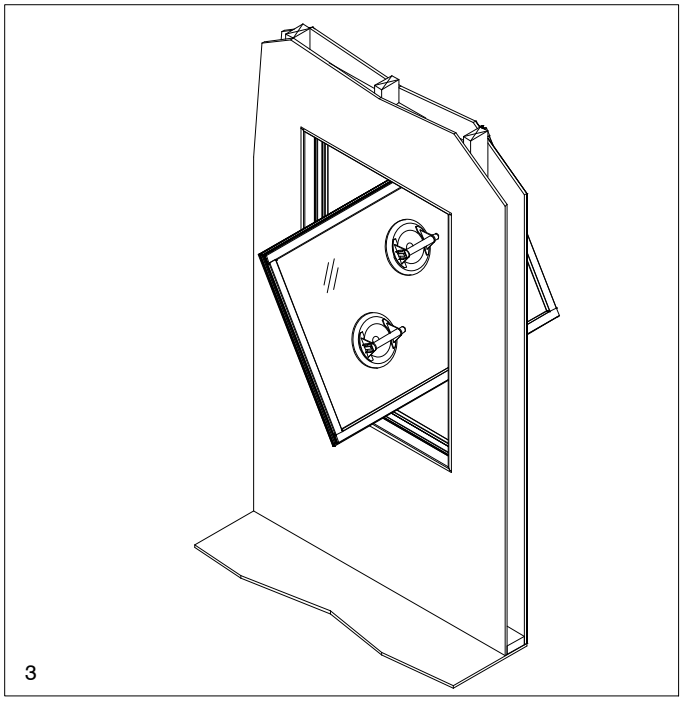

3

Replacing Casement Stationary Sash

NOTE: Before installing the stationary sash, carefully inspect setting blocks to make sure they remained in place. Inspect frame and sash weather strip for tears or other imperfections caused during removal.

4. With the assistance of another individual or glass handling suction cups, slide the sash through the frame, turn to an upright position and set the bottom of the stationary sash in the frame from the exterior. Tip the top of the sash in and hold in place, sash should fit snugly in frame. See illustration 4.
5. Pull the sash in with glass handling suction cups or have an assistant push from the exterior to keep the sash seated in the frame. Using a #2 Phillips screwdriver attach the sash to the stationary brackets.
6. Once the sash has been fastened to all stationary brackets check to make sure that sash is seated properly in the frame.
7. Reattach jamb stops to frame in the reverse order as step 1.

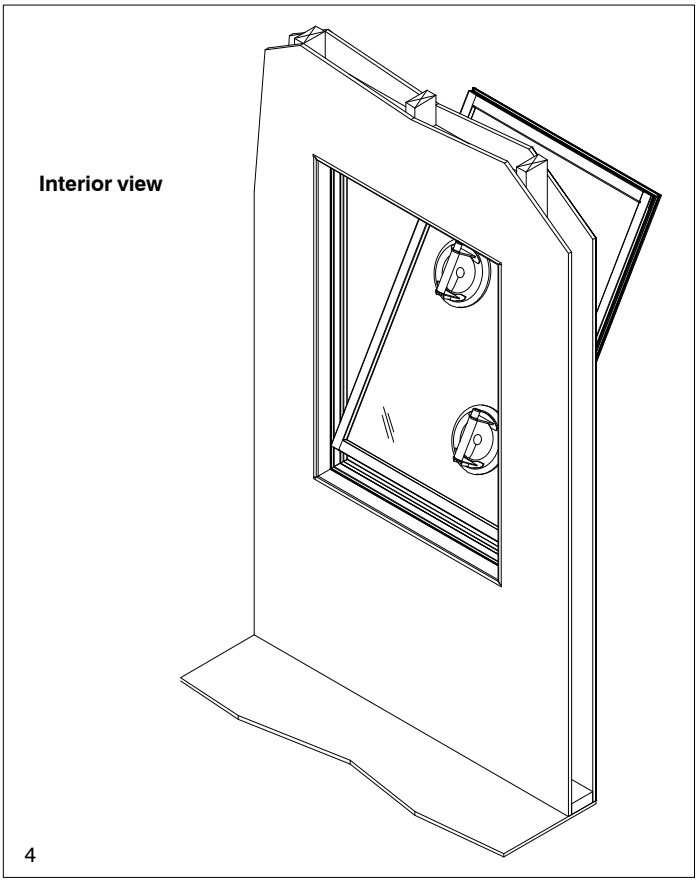

4