CHAPTER 20

INTEGRITY ALL ULTREX SLIDING PATIO DOOR

Table of Contents

	PAGE
History	20.2
Part Identification – Two Panel Operator	20.3
Part Identification – Three Panel Operator	20.4
Parts	
Hardware	20.5
Aluminum	20.8
Miscellaneous	20.9
Weather Strip and Vinyl	20.11
Installation Kits	20.14
Wood Parts	20.15
Sash, Frame and DLO Charts	20.16
Panel, Screen and Grille Replacement	20.17
Screens and Screen Parts	20.18
Service	
Screen Adjustment	20.20
Screen Removal	20.21
Screen Replacement	20.22
Operator Panel Adjustment	20.23
Operator Panel Removal	20.24
Stationary Panel Removal	20.25
Keeper Installation	20.26
Mortise Lock Adjustment/Removal	20.27

ATTENTION:

- Specification and technical data are subject to change without notice.
- Numbers listed in parentheses ( ) are metric equivalents in millimeters rounded to the nearest whole number.

PRODUCED	UNIT TYPE	FEATURES OR CHANGES	DISCONTINUED
March 2008	Sliding Patio Door	Unit features 3/4″ insulating Low E II tempered glass with Argon, single point mortise style locking system, stainless steel ball bearing twin roller operating system, 3 3/8″ jambs with 4 9/16″ or 6 9/16″ extensions available, optional factory applied sheet rock return and field applied j–channel, and exterior non–keyed handle. Pultruded fiberglass (Ultrex) interior and exterior. White Ultrex interior only with white hardware. Stone white, pebble gray, bronze, evergreen or cashmere Ultrex exteriors with hardware finish to match Ultrex finish option selection. GBGs are white to the interior, exterior GBGs match exterior Ultrex finish option selection. PVC sill liner and color matched top hung screen. Available in 2–panel (5068, 50610, 5080, 6068, 60610, 6080) and 3–panel (90610, 9080) configuration	Present
March 2009	Sliding Patio Door	Ebony exteriors introduced.	Present
May 2009	Sliding Patio Door	LoÉ^{3} 366™ glass option introduced.	Present
February 2010	Sliding Patio Door	Introduced new handle design for the PVD Brass, Satin Nickel and Oil Rubbed bronze finish.	Present
February 2011	Sliding Patio Door	February 28, 2011 Introduced keyed option for complete handle sets.	Present
January 2012	Sliding Patio Door	January 30, 2012 Introduced the 5′ 10″ CN.	Present
April 2012	Sliding Patio Door	April 30, 2012 Added the 32″ NCO Handle Option.	Present
July 2012	Sliding Patio Door	Improved 9080 structural stability with product enhancements at the Leveling Block End Cap and top of Operator Panel.	Present

PART IDENTIFICATION

2 PANEL OPERATOR

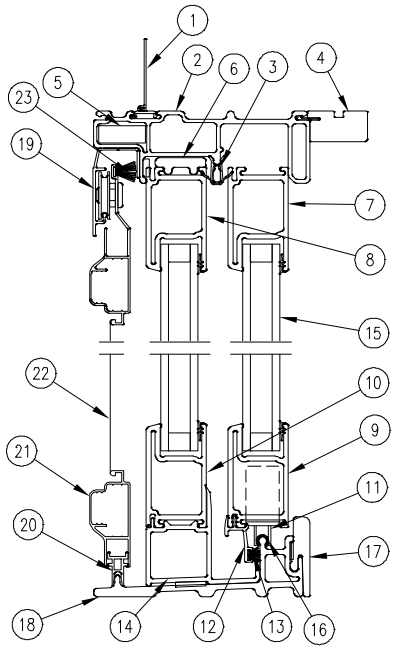

HEAD JAMB & SILL DETAIL OPERATOR

JAMB DETAIL

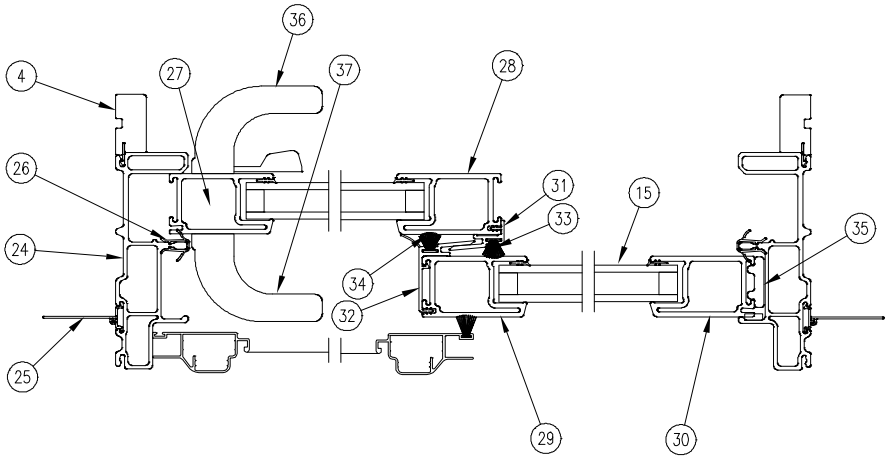

NOTE: XO CONFIGURATION SHOWN

NOTE: Not to scale; specifications subject to change without notice.

1. Head Jamb Nailing Fin
2. Ultrex Head Jamb
3. Head Jamb Weather Strip
4. Jamb Extension
5. Head Jamb Screw Backer
6. Stat. Panel Head Jamb Spacer
7. Operator Panel Top Rail
8. Stationary Panel Top Rail
9. Operator Panel Bottom Rail
10. Stationary Panel Bottom Rail
11. Adjustable Roller
12. Operator Panel Drip Seal
13. Panel Drip Weather Strip
14. Stationary Panel Leveling Block
15. Insulating Glass
16. Stainless Steel Cap
17. Sill Liner
18. Ultrex Sill
19. Head Jamb Screen Track
20. Screen Roller Guide
21. Screen Frame
22. Screen Mesh
23. Screen Frame Weather Strip
24. Ultrex Jamb
25. Jamb Nailing Fin
26. Jamb Weather Strip
27. Operator Locking Stile
28. Operator Meeting Stile
29. Stationary Meeting Stile
30. Stationary Jamb Stile
31. Operator Panel Interlock
32. Stationary Panel Interlock
33. Operator Interlock Pile Weather Strip
34. Stationary Interlock Pile Weather Strip
35. Panel Spacer
36. Interior Handle
37. Exterior Handle

3 PANEL OPERATORS

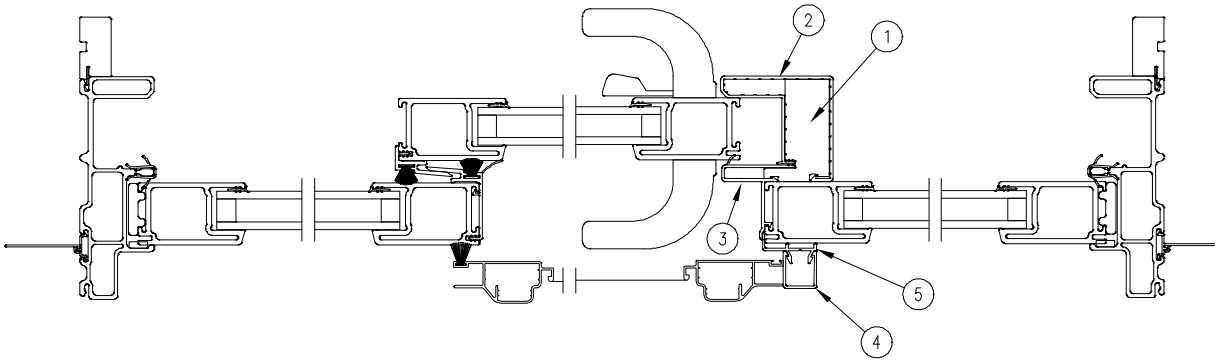

3 PANEL JAMB DETAIL – OXO

JAMB DETAIL

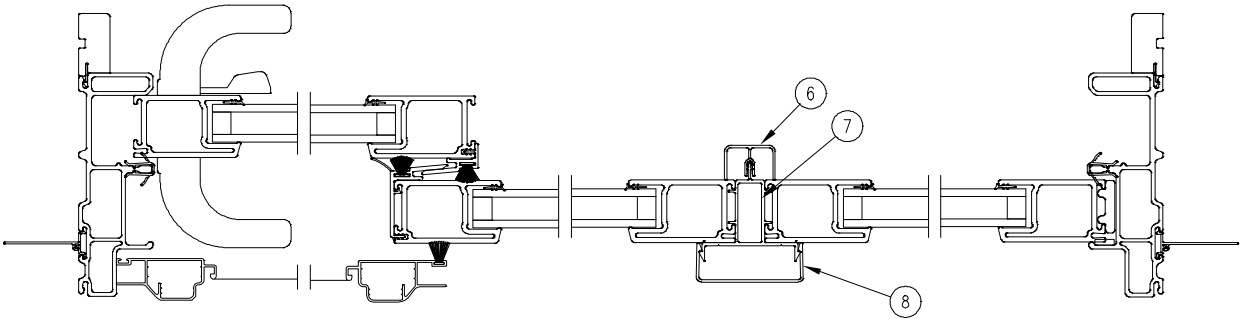

3 PANEL JAMB DETAIL – XOO

NOTE: Not to scale; specifications subject to change without notice.

1. Astragal Core OXO
2. Astragal Cap Interior OXO
3. Astragal Cap Exterior OXO
4. Screen Stop Astragal Cap
5. Screen Stop Astragal Base
6. Mull Trim Interior OOX/XOO
7. Stationary Panel Spline
8. Spline Cap Exterior

When ordering replacement Sliding Patio Door parts specify, part number, description, color (if applicable), and handing (if applicable).

NOTE: All handles for post February 22, 2010 are interchangeable regardless of style or finish.

ILLUSTRATION *NOT TO SCALE*	DESCRIPTION	COLOR	PART NO.
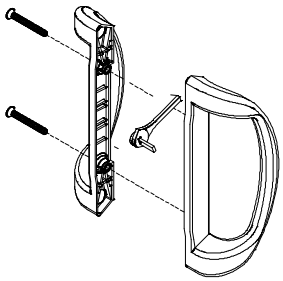	**Complete Handle Set, Non–keyed** *Usage: February 22, 2010 to present* *Includes:* *1 – handle assembly, int. and ext. same finish* *1 – Lock Lever* *2 – Machine screws, #8 x 1.5″ Phillips Head*	SW AF	10140056 10140057
	Handle, Interior Kit* *Includes:* *1 – Interior handle* *1 – Lock Lever* *2 – Machine screws, #8 x 1.5″ Phillips Head*	SW AF	11897180 11897181
	Handle, Exterior Kit *Includes:* *1 – Exterior handle*	SW AF	11897185 11897186
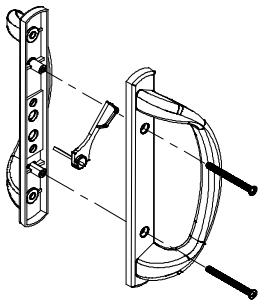 **viewed from interior**	**Complete Handle Set, Non–keyed** *Usage: February 22, 2010 to present* *Includes:* *1 – handle assembly, int. and ext. same finish* *1 – Lock Lever* *2 – Machine screws, #8 x 1.5″ Phillips Head*	BS PVD SN PVD ORBZ PVD	10140058 10140059 10140060
	Handle, Interior Kit* *Includes:* *1 – Interior handle* *1 – Lock Lever* *2 – Machine screws, #8 x 1.5″ Phillips Head*	BS PVD SN PVD ORBZ PVD	11897182 11897183 11897184
	Handle, Exterior Kit *Includes:* *1 – Exterior handle*	BS PVD SN PVD ORBZ PVD	11897187 11897188 11897189
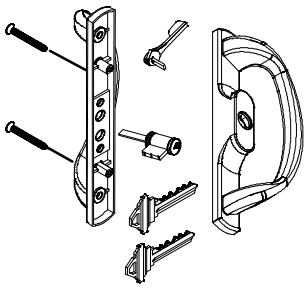	**Complete Handle Set, Keyed** *Usage: February 28, 2011 to present* *Includes:* *1 – handle assembly, int. and ext. same finish* *1 – Lock Lever* *2 – Machine screws, #8 x 1.5″ Phillips Head* *1 – Lock cylinder* *2 – Keys*	WH AF BS PVD SN PVD ORBZ PVD	10140061 10140062 10140063 10140064 10140065
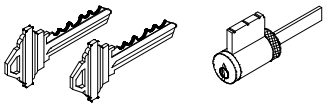	**Keyed Cylinder** *Includes:* *1–Lock cylinder* *2–Keys*		11860976

* Can be used on either keyed or non–keyed handles

ILLUSTRATION *NOT TO SCALE*	DESCRIPTION	COLOR	PART NO.
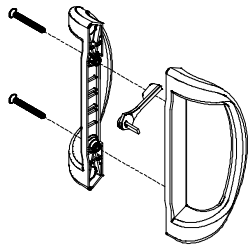	**Obsolete Handle Set, Non–keyed** *Usage: Prior to February 22, 2010* *Includes:* *1 – handle assembly, int and ext* *1 – Lock Lever* *2 – Machine screws, #10 x 1.5″ Phillips Head*	WH PB BZ EG CA EB	10140050 10140051 10140052 10140053 10140054 10140055
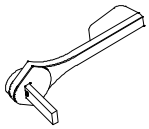	**Lock Lever**	SW AF BS PVD SN PVD ORBZ PVD	10897076 10897077 10897078 10897079 10897080
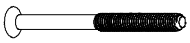	**Machine Screw, #8 x 1.5″**	SW AF BS PVD SN PVD ORBZ PVD	11801025 11801026 11801027 11801028 11801029
	Grommet *Includes:* *2 – grommets* *NOTE: Use as adapter from #10 screws to #8 screws*	BK	10897082
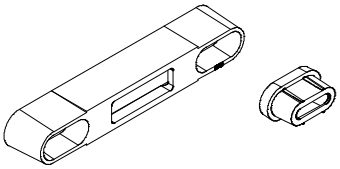	**Keeper** *Includes:* *1 – Keeper – 11100441* *2 – Operator lock stops* *2 – #8 x 3″ Phillips panhead screws – 11800829*		11800041
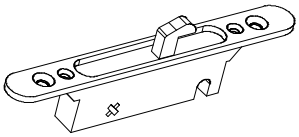	**Mortise Lock** includes fasteners: *2 – #8 x 1″ Phillips flathead screws – 11800810*		11800022
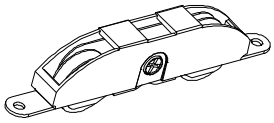	**Adjustable Panel Roller** includes fasteners: *2 – #8 x 1″ Phillips flathead screws – 11800810*		10820000
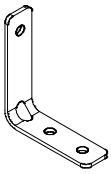	**Stationary Panel Bracket** includes fasteners: *1 – #8 x 1″ Phillips panhead screws – 11800820* *1 – #8 x 3″ Phillips panhead screws – 11800829* *1 – #8 x 3/4″ Phillips trusshead screws – 11800898*		11800010

When ordering replacement Sliding Patio Door parts specify:

1. Part number;
2. Description;
3. Color (if applicable);
4. Handing (if applicable).

Net Clear Opening Handle

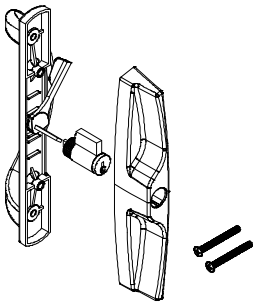

NOTE: ILLUSTRATION *NOT TO SCALE*

	Fastener Colors				
Non Keyed Handle Kit Colors	**White**	**Almond Frost**	**Black**	**Silver**	**Brass Plated**
White	11810001	11810004	11810007	11810010	11810017
Almond Frost	11810002	11810005	11810008	11810011	11810018
Bronze	11810003	11810006	11810009	11810016	11810019

	Fastener Colors				
Keyed Handle Kit Colors	**White**	**Almond Frost**	**Black**	**Silver**	**Brass Plated**
White	11820020	11820023	11820026	11820029	11820032
Almond Frost	11820021	11820024	11182027	11820030	11820033
Bronze	11820022	11820025	11820028	11820031	11820034

NOTE: Each kit contains one handle, two screws, installation instructions and one label.

1 5/8″ Oval Screws	**White**
White	11801155
Almond Frost	11801156
Black	11801157
Silver	11801158
Brass Plated	11801159

When ordering replacement Sliding Patio Door parts specify:

1. Part number;
2. Description;
3. Color (if applicable);
4. Handing (if applicable).

ILLUSTRATION AND DESCRIPTION
ILLUSTRATIONS NOT TO SCALE

Spline Cap, Exterior
A1508

Screen Stop Astragal Cap
A361

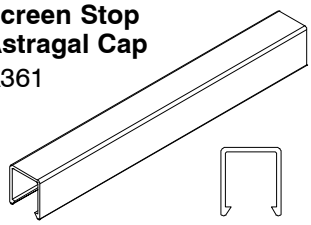

Screen Stop Astragal Base
A362

Includes:
8–10 – #8 x 2″ Phillips panhead screws

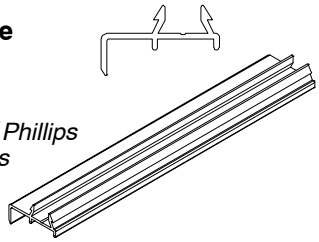

Call Number	Operation	Length	Description / Color / Part No.					
Spline Cap (A1508)								
			SW/SW	**PB/SW**	**BZ/SW**	**EG/SW**	**CS/SW**	**EB/SW**
6–8		77 1/2″ (1969)	11008510	12008510	13008510	14008510	15008510	16008510
6–10		79 1/2″ (2019)	11008610	12008610	13008610	14008610	15008610	16009610
8–0		93 1/2″ (2375)	11000880	12000880	13000880	14000880	15000880	16000980
Lineal		96″ (2438)	11008499	11008599	11008699	11008799	11008899	11008999
Screen Stop Astragal Cap (A361)								
			SW/SW	**PB/SW**	**BZ/SW**	**EG/SW**	**CS/SW**	**EB/SW**
6–8		76 23/32″ (1948)	18505101	18505102	18505103	18505104	18505105	18505106
6–10		79 1/2″ (2019)	18506102	18506101	18506103	18506104	18506105	18506106
8–0		93 1/2″ (2375)	18500802	18500801	18500803	18500804	18500805	18500806
Lineal		96″ (2438)	18547696	18547596	18547796	18547869	18547969	18547970
Screen Stop Astragal Base (A362)								
			SW/SW	**PB/SW**	**BZ/SW**	**EG/SW**	**CS/SW**	**EB/SW**
6–8		77 17/32″ (1969)	11800268	11800368	11800468	11800568	11800768	11800968
6–10		79 1/2″ (2019)	11800461	11800561	11800961	11801061	11801161	15916105
8–0		93 1/2″ (2375)	11801280	11801380	11801480	11801580	11801680	15910806
Lineal		96″ (2438)	18547896	18547797	18547997	18547998	18547999	18548000

ILLUSTRATION *NOT TO SCALE*	DESCRIPTION	OPER./COLOR	PART NO.
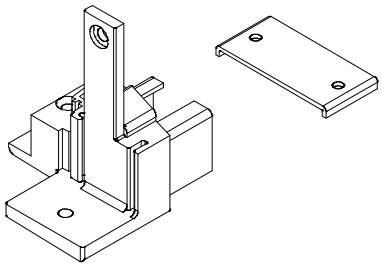	**Leveling Block End Cap** *Includes:* *1 – End cap* *2 – #8 x 1 ″ Phillips panhead screws – 11800820* *1 – #8 x 1 1/2 ″ Phillips panhead screws – 11800852* *1 – #8 x 1 ″ Phillips flathead screws – 11800810* *1 – Stationary panel dust block* *2 – Leveling block end cap dust block* *1 – Leveling block end cap retainer – 11850110*	OX/OOX/OXO XO/XOO/OXO	11800999 11800099
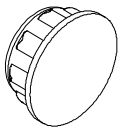	**Roller Adjustment Hole Cap**	SW	156015
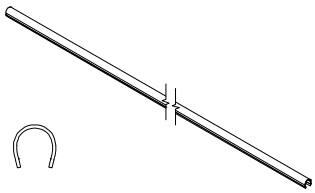	**Stainless Steel Sill Cap** CN 5–0 width CN 5–10 width CN 6–0/ 9–0 OXO width CN 9–0 OOX, XOO width	58″ (1473) 67 1/32″ (1703) 70″ (1778) 105 1/2″ (2680)	10600650 10600510 10600660 10600690
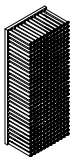	**Dust Block, Leveling Block End Cap**		10600250
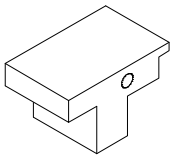	**Astragal Foam Plug**		10500880
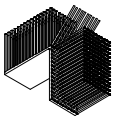	**Stationary Panel Dust Block**		15600011
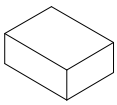	**Panel Drip Plug**		10500137
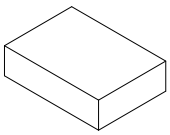	**Jamb/Sill Foam Block**		10500136

ILLUSTRATION *NOT TO SCALE*	DESCRIPTION	OPER./COLOR	PART NO.
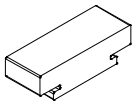	**Stationary Panel to Head Jamb Foam Block**		10600500
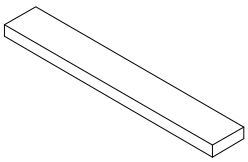	**Sill Liner Foam Frame Sealant** 1/16″ x 3/8″ (1.5 x 9.5)		10500142
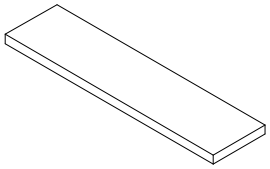	**Leveling Block Foam Frame Sealant** 3/32″ x 5/8″ (2.4 x 15.9)		11406212
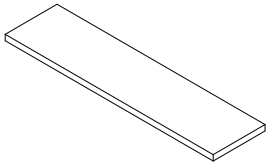	**Foam Frame Sealant** *NOTE: Adhesive one side – 100′* 1/8″ x 3/8″ (3.2 x 9.5)		10500050

WEATHER STRIP AND VINYL

When ordering replacement weatherstrip specify:

1. Quantity;
2. Profile number;
3. Part number;
4. Size;
5. Description.

ILLUSTRATION *NOT TO SCALE*	DESCRIPTION	LENGTH/ COLOR	PART NO.
	Sill Liner V1634		
	CN 5–0	56 17/32″ (1436)	11100050
	CN 5–10	67 1/32″ (1703)	11100510
	CN 6–0	68 17/32″ (1741)	11100060
	CN 9–0	104 17/32″ (2655)	11100090
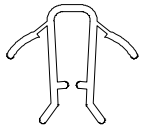	**Head Jamb Weather Strip** V1636		
	CN 5–0 width	56 17/32″ (1436)	18210050
	CN 5–10 width	67 31/32″ (1726)	18210510
	CN 6–0 width	68 17/32″ (1741)	18210060
	CN 9–0 width	104 17/32″ (2655)	18210090
	Jamb Weather Strip V1636		
	CN 6–8 height	78 3/32″ (1984)	18210068
	CN 6–10 height	80 3/32″ (2034)	18210610
	CN 8–0 height	94 3/32″ (2390)	18210080
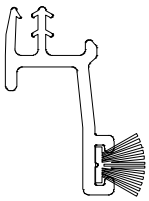	**Panel Seal** V1637 *Includes: Pile weather strip*		
	CN 5–0	29 13/32″ (747)	18310050
	CN 5–10	34 21/32″ (880)	18310510
	CN 6–0/9–0	35 13/32″ (899)	18310060
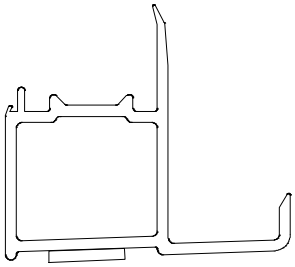	**Leveling Block** V1639 *Includes: Adhesive foam tape*		
	CN 5–0	28 15/16″ (735)	11800050
	CN 5–10	34 3/16″ (868)	11801510
	CN 6–0/9–0	34 15/16″ (887)	11800060
	CN 9–0	70 15/16″ (1802)	11800090

WEATHER STRIP AND VINYL

ILLUSTRATION *NOT TO SCALE*	DESCRIPTION	LENGTH/ OPERATION	PART NO.
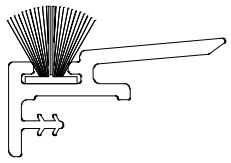	**Interlock, Operator** V1646 *Includes:* *Pile Weather Strip (11107546)* *gasket* CN 6–10 CN 6–8 CN 8–0	78 3/16″ (1986) 76 3/16″ (1935) 92 3/16″ (2342)	11806610 11800668 11800280
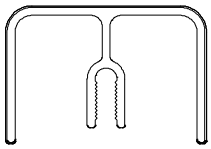	**Spline Cap, Interior** V1633 SW CN 6–10 CN 6–8 CN 8–0	79 3/4″(2026) XOO/OOX 77 3/4″(1975) XOO/OOX 93 3/4″(2381) XOO/OOX	16901610 16901510 16900180
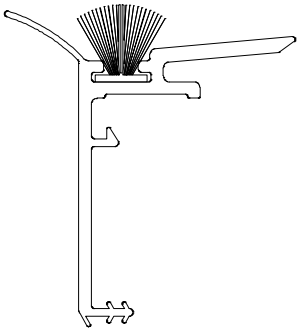	**Interlock, Stationary** V1638 *Includes:* *Pile Weather Strip (11107546)* CN 6–8 CN 6–10 CN 8–0	77 5/8″ (1972) XO 77 5/8″ (1972) OX 79 5/8″ (2022) XO 79 5/8″ (2022) OX 93 5/8″ (2378) OX 93 5/8″ (2378) XO	11800068 11800168 11800061 11810161 11800080 11810180
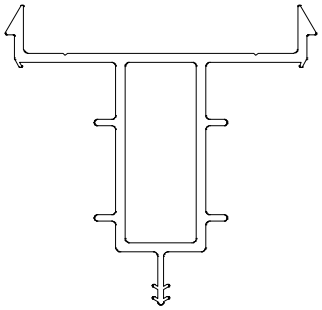	**Stationary Panel Spline** V1649 *Includes: Pile weather strip* *16–20 – #8 x 5/8″ Phillips* *PH screws – 11800505* CN 6–10 CN 6–8 CN8–0	79 7/8″(2029) XOO/OOX 77 7/8″(1978) XOO/OOX 93 7/8″(2385) XOO/OOX	11800361 11801068 11800380

ILLUSTRATION *NOT TO SCALE*	DESCRIPTION	LENGTH/ OPERATION	PART NO.
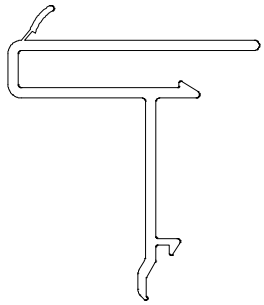	**Astragal Cap, Exterior** V1663		
	CN 6–8 RH, OXO	77 17/32″ (1969)	15000511
	CN 6–8 LH, OXO	77 17/32″ (1969)	15000510
	CN 6–10 RH, OXO	79 17/32″ (2020)	15000611
	CN 6–10 LH, OXO	79 17/32″ (2020)	15000610
	CN 8–0 RH, OXO	93 17/32″ (2375)	15000081
	CN 8–0 LH, OXO	93 17/32″ (2375)	15000080
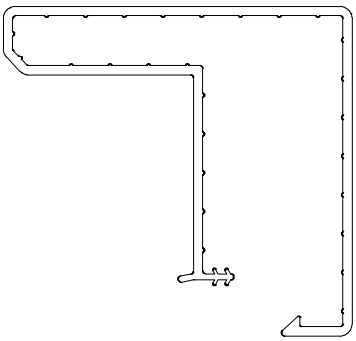	**Astragal Cap, Interior** V1667		
	CN 6–8 RH, OXO	77 7/8″ (1979)	15002510
	CN 6–8 LH, OXO	77 7/8″ (1979)	15001510
	CN 6–10 RH, OXO	79 7/8″ (2020)	15002610
	CN 6–10 LH, OXO	79 7/8″ (2020)	15001610
	CN 8–0 RH, OXO	93 7/8″ (2384)	15000280
	CN 8–0 LH, OXO	93 7/8″ (2384)	15000180
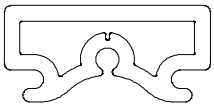	**Panel Extension Block** V2228 *Includes:* *1 – #8 x 1 ″ Phillips panhead screw – 11800820*		
	CN 9080 RH, OXO CN 9080 LH, OXO CN 9080, OOX CN 9080, XOO	28″ (711)	02100028

INSTALLATION KITS

ILLUSTRATION *NOT TO SCALE*	DESCRIPTION	PART NO.
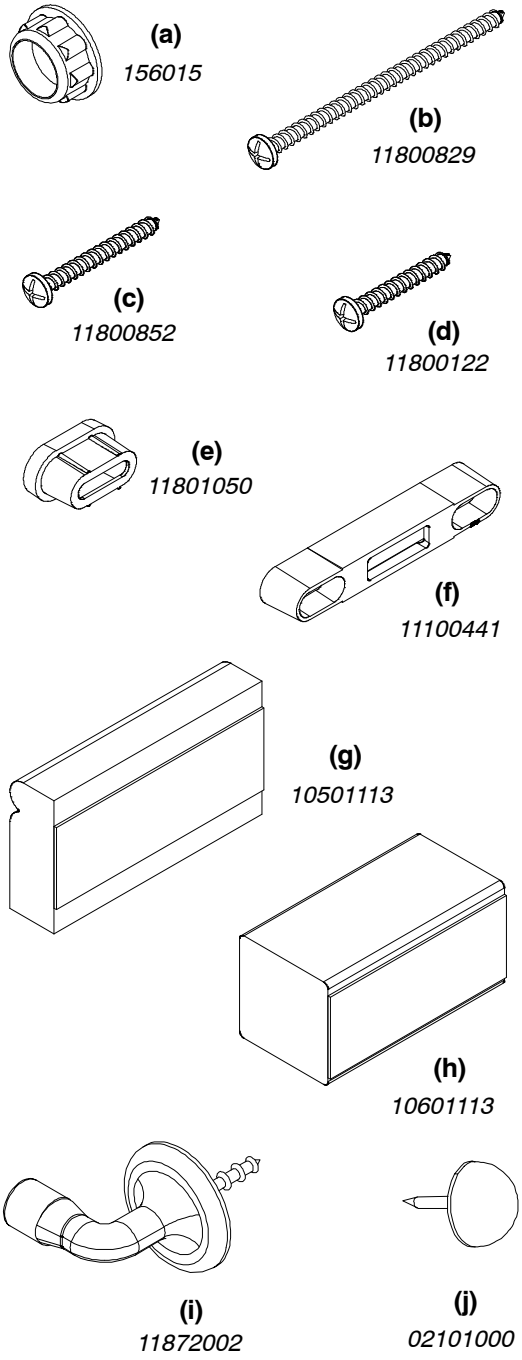	**OX/XO Installation Kit** *Includes:* *2 – Hole plug (a)* *9 – #8 x 3″ pan head screw (b)* *1 – #8 x 1 1/2″ pan head screw (c)* *1 – #8 x 1 1/4″ pan head screw (d)* *2 – Door stop, keeper (e)* *1 – Keeper (f)* *1 – Operator stop block, sill (g)* *1 – Operator stop block, header (h)* *2 – thumb tack bumpers (j)* *NOTE: Also included with each package are installation instructions, installation supplement and nailing fin corner gaskets.*	11800001
	OOX/XOO Installation Kit *Includes:* *2 – Hole plug (a)* *11 – #8 x 3″ pan head screw (b)* *1 – #8 x 1 1/2″ pan head screw (c)* *1 – #8 x 1 1/4″ pan head screw (d)* *2 – Door stop, keeper (e)* *1 – Keeper (f)* *2 – Operator panel stop/bumper – SW (i)* *NOTE: Also included with each package are installation instructions, installation supplement and nailing fin corner gaskets.*	11800002
	OXO Installation Kit *Includes:* *2 – Hole plug (a)* *9 – #8 x 3″ pan head screw (b)* *2 – #8 x 1 1/2″ pan head screw (c)* *3 – #8 x 1 1/4″ pan head screw (d)* *2 – Door stop, keeper (e)* *1 – Keeper (f)* *1 – Operator stop block, sill (g)* *1 – Operator stop block, header (h)* *2 – thumb tack bumpers (j)* *NOTE: Also included with each package are installation instructions, installation supplement and nailing fin corner gaskets.*	11800003

When ordering replacement wood parts specify:

1. Part number;
2. Size;
3. Description.
4. Handing (if applicable)
5. Bare wood or white interior.

ILLUSTRATION *NOT TO SCALE*	DESCRIPTION	LENGTH	BARE WOOD PART NO.
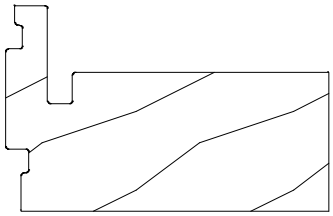	**Astragal Core** W9782		
	CN 6–8 RH, OXO	77 7/8″ (1978)	31505511
	CN 6–8 LH, OXO	77 7/8″ (1978)	31505510
	CN 6–10 RH, OXO	79 7/8″ (2029)	31505611
	CN 6–10 LH, OXO	79 7/8″ (2029)	31505610
	CN 8–0 RH, OXO	93 7/8″ (2384)	31505081
	CN 8–0 LH, OXO	93 7/8″ (2384)	31505080

SASH, FRAME AND DLO CHARTS

Use this chart to determine sizes for replacement parts, panels and screen.

- Daylight Opening (DLO) is a measurement of the visible glass.
- Outside measurement = OM
- Sizes for All Ultrex Sliding Patio Doors manufactured 3/17/2008 to present.

WIDTH					
Unit CN	**Frame OM**	**Panel OM**	**DLO**	**Screen OM**	**Standard Lite Cut**
5–0	59 1/2″ (1511)	29 13/32″ (747)	25″(635)	29 3/16″ (741)	3W
5–10	70″(1778)	34 21/32″ (880)	30 1/4″(768)	34 7/16″ (875)	3W
6–0	71 1/2″ (1816)	35 13/32″ (899)	31″(787)	35 3/16″ (894)	3W
9–0	107 1/2″ (2730)	35 13/32″ (899)	31″(787)	35 3/16″ (894)	3W

HEIGHT					
Unit CN	**Frame OM**	**Panel OM**	**DLO**	**Screen OM**	**Standard Lite Cut**
6–8	79 1/2″ (2019)	76 29/32″ (1953)	72 1/2″ (1842)	77 3/4″(1975)	5H
6–10	81 1/2″ (2070)	78 29/32″ (2004)	74 1/2″ (1892)	79 3/4″(2026)	5H
8–0	95 1/2″ (2426)	92 29/32″ (2360)	88 1/2″ (2248)	93 3/4″(2381)	6H

ORDERING REPLACEMENT INTEGRITY SLIDING PATIO DOOR PANELS

To order replacement panels specify:

1. Call number size;
2. Operator or stationary;
3. Handing;
4. Exterior color.

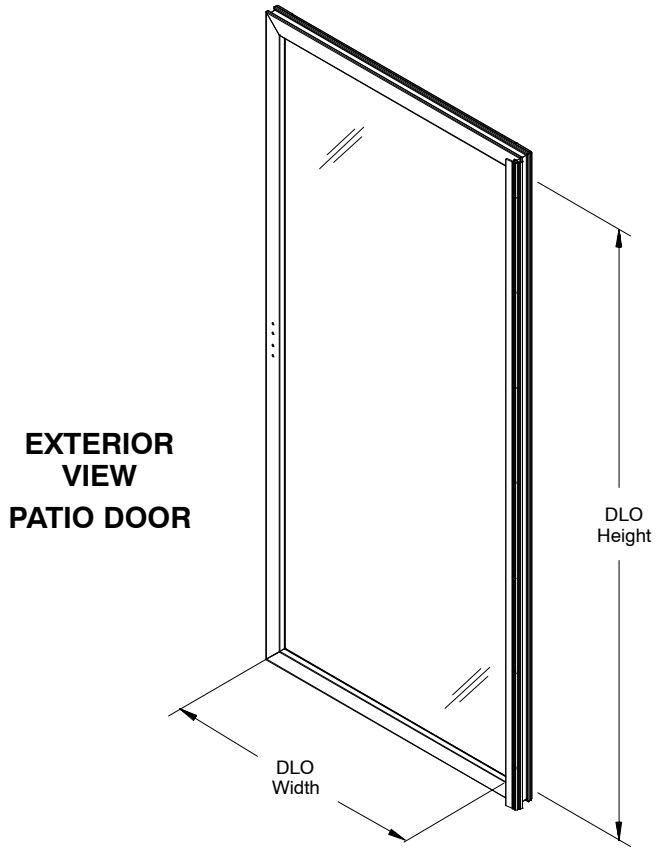

ORDERING REPLACEMENT INTEGRITY SLIDING PATIO DOOR SCREENS

Screens are standard with a color matched aluminum surround and charcoal colored fiberglass 18 x 16 screen mesh. Determine the outside measurement of the existing screen. Find the sizes that correspond to the width and height indicated on the chart in the previous section.

To order replacement screens specify:

1. Call number size; if there is no existing screen from which to obtain the OM of the screen, determine the size of the screen by using the chart in the previous section. The daylight opening is the measurement of the visible glass.
2. Handing;

When ordering Sliding Patio Door replacement screen parts specify:

1. Description;
2. Part number;
3. Quantity.

ILLUSTRATION *NOT TO SCALE*	DESCRIPTION		LENGTH/ COLOR	PART NO.
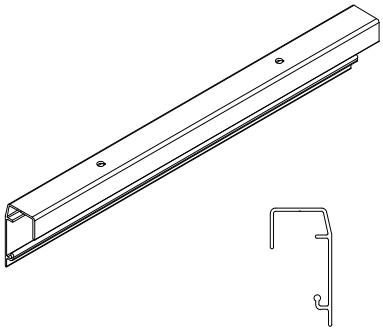	**Screen Track** A1237 *Includes:* *1 – Head jamb screen track* *6 – #8x5/8″ Phillips self tapping undercut trusshead screws 11800862*			
	CN 5–0	57 29/32″ (1471)	SW	15901050
	CN 5–0		PB	15902050
	CN 5–0		BZ	15903050
	CN 5–0		EG	15904050
	CN 5–0		CS	15905050
	CN 5–0		EB	15906050
	CN 5–10	68 13/32″ (1737)	SW	15901510
	CN 5–10		PB	15902510
	CN 5–10		BZ	15903510
	CN 5–10		EG	15904510
	CN 5–10		CS	15905510
	CN 5–10		EB	15906510
	CN 6–0	69 29/32″ (1775)	SW	15901060
	CN 6–0		PB	15902060
	CN 6–0		BZ	15903060
	CN 6–0		EG	15904060
	CN 6–0		CS	15905060
	CN 6–0		EB	15906060
	CN 9–0	105 29/32″ (2690)	SW	15901105
	CN 9–0		PB	15902105
	CN 9–0		BZ	15903105
	CN 9–0		EG	15904105
	CN 9–0		CS	15905105
	CN 9–0		EB	15906105
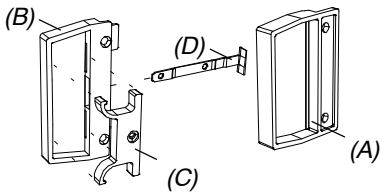	**Screen Handle Assembly** *Includes:* *1 – Exterior handle (A)* *1 – Interior handle (B)* *1 – Slide (C)* *1 – Latch (D)* *3 – Screws* *1 – Rivet* *NOTE: For newer profile screens. See previous page to determine replacement handle type based on screen profile.*		BK	10150028

ILLUSTRATION *NOT TO SCALE*	DESCRIPTION	LENGTH/ COLOR	PART NO.
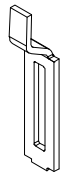	**Door Strike** includes fasteners: *1 – #8 x 5/8″ Phillips pan head screw 11800505*		02100963
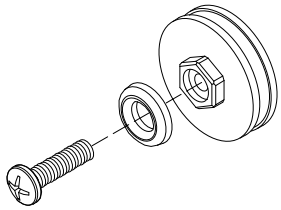	**Screen Roller Assembly** *Includes:* *2 – Rollers* *2 – Machine screws* *2 – Grommet washers*		11869525
	Screen Roller Track Dust Block 7/8″ x 7/8″ x 3/16″ *NOTE: Adhesive backed, located behind the screen roller bar*	GY	10500143
	Screen Door Meeting Stile Dust Block 17/32″ x 7/8″ x 1/2″ *NOTE: Adhesive backed*	GY	10500161
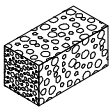	**Screen Bumper** 3/4″ x 3/4″ x 1 3/8″	WH	02540675
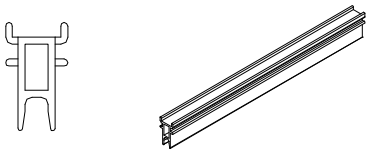	**Screen Roller Guide** V014	CN 5–0 CN 5–10 CN 6–0/9–0	15916850 15916510 15916855

Screen Adjustment

1. Adjustment is possible from the interior by loosening or tightening the top roller screw nearest the locking jamb. Adjust the screen so that it is parallel to the locking jamb or casing to achieve an even reveal along the entire height of the jamb. See illustration 1.

NOTE: If more adjustment is necessary, the other roller adjustment screw can be used but the screen panel may need to be removed for access.

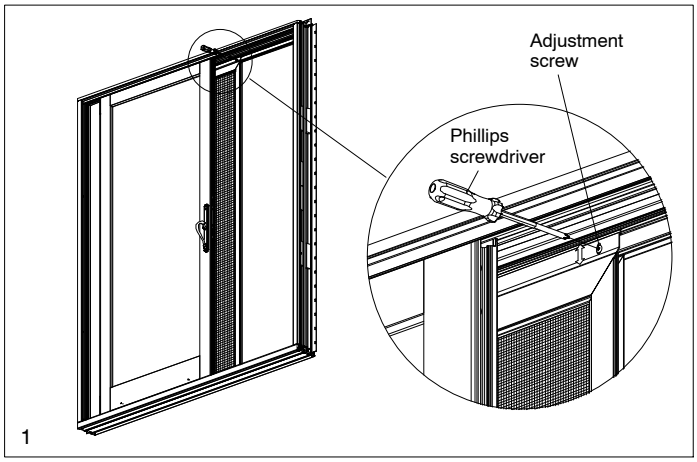

REMOVING THE SCREEN PANEL

1. To remove the screen panel, start at the bottom corner and pry the screen panel guide up with a putty knife. Pull the guide off the screen sill track and work your way to the other end. See illustration 1.
2. Once the sill end of the screen panel is completely released from the sill track, pivot the bottom of the screen out and push the panel toward the head jamb. This will release the screen panel rollers from the head jamb screen track. Remove the panel from the door. See illustration 2.

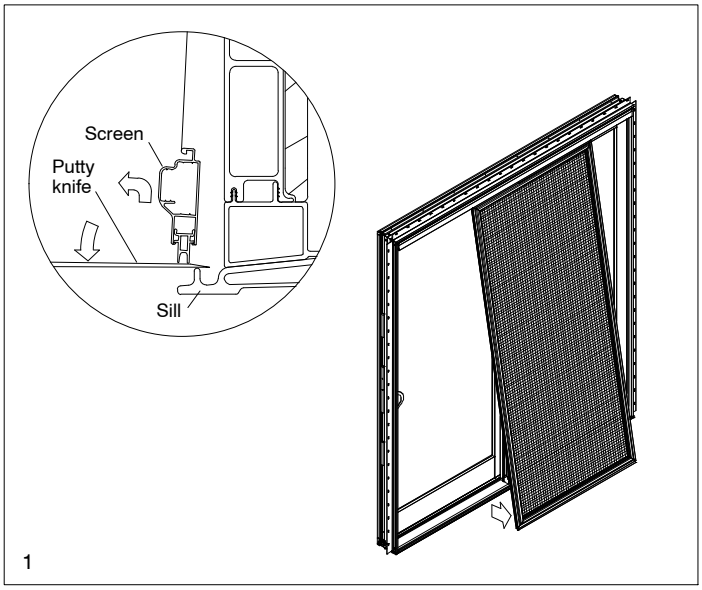

1

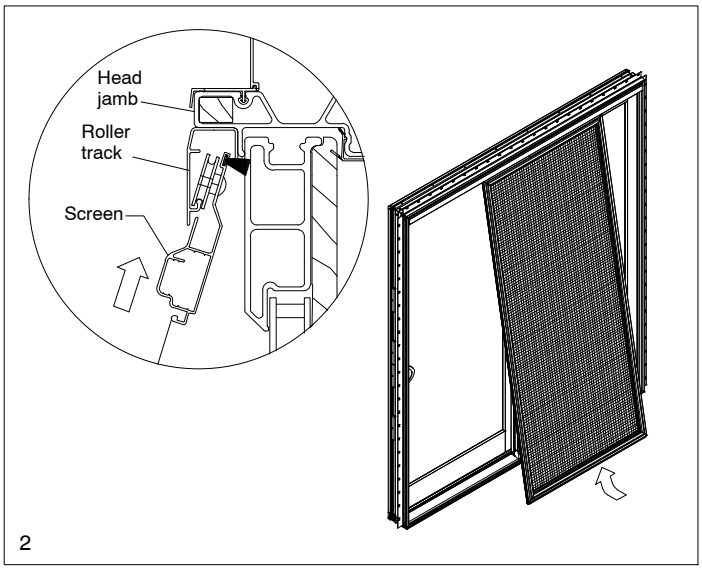

2

INSTALLING THE SCREEN PANEL

1. From the exterior, hold the screen with the rollers facing you while tilting the bottom of the screen panel away from the door. Lift the rollers into the screen track and pull the panel toward your body to engage the rollers in the track. See illustration 1. Make sure the rollers are seated in the screen track by moving the panel back and forth.
2. Once you are sure the rollers are fully seated in the screen track, pivot the screen panel onto position toward the sill and place the bottom screen panel guide into the sill track by lifting it with your fingers or by lifting with a stiff putty knife. See illustration 2.

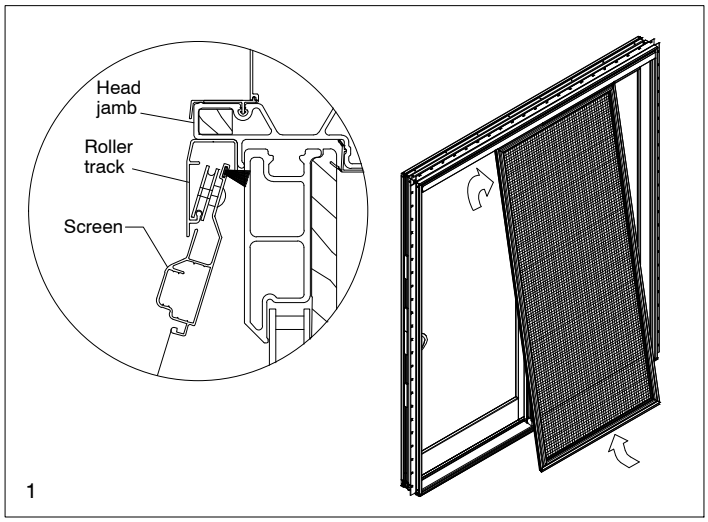

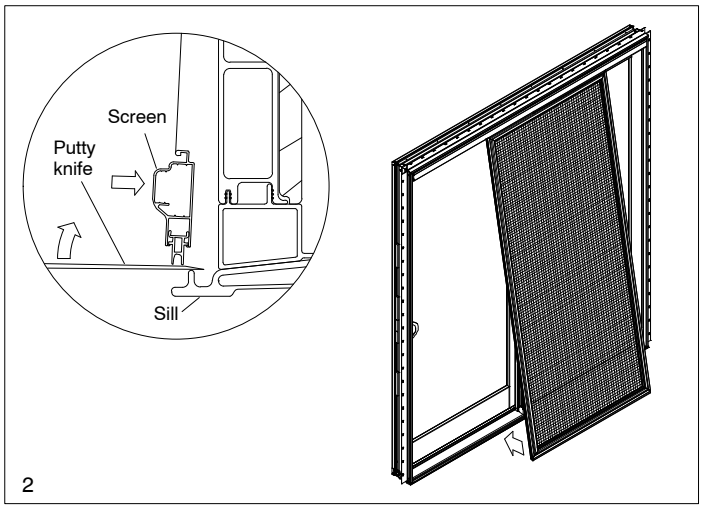

Uneven Reveal

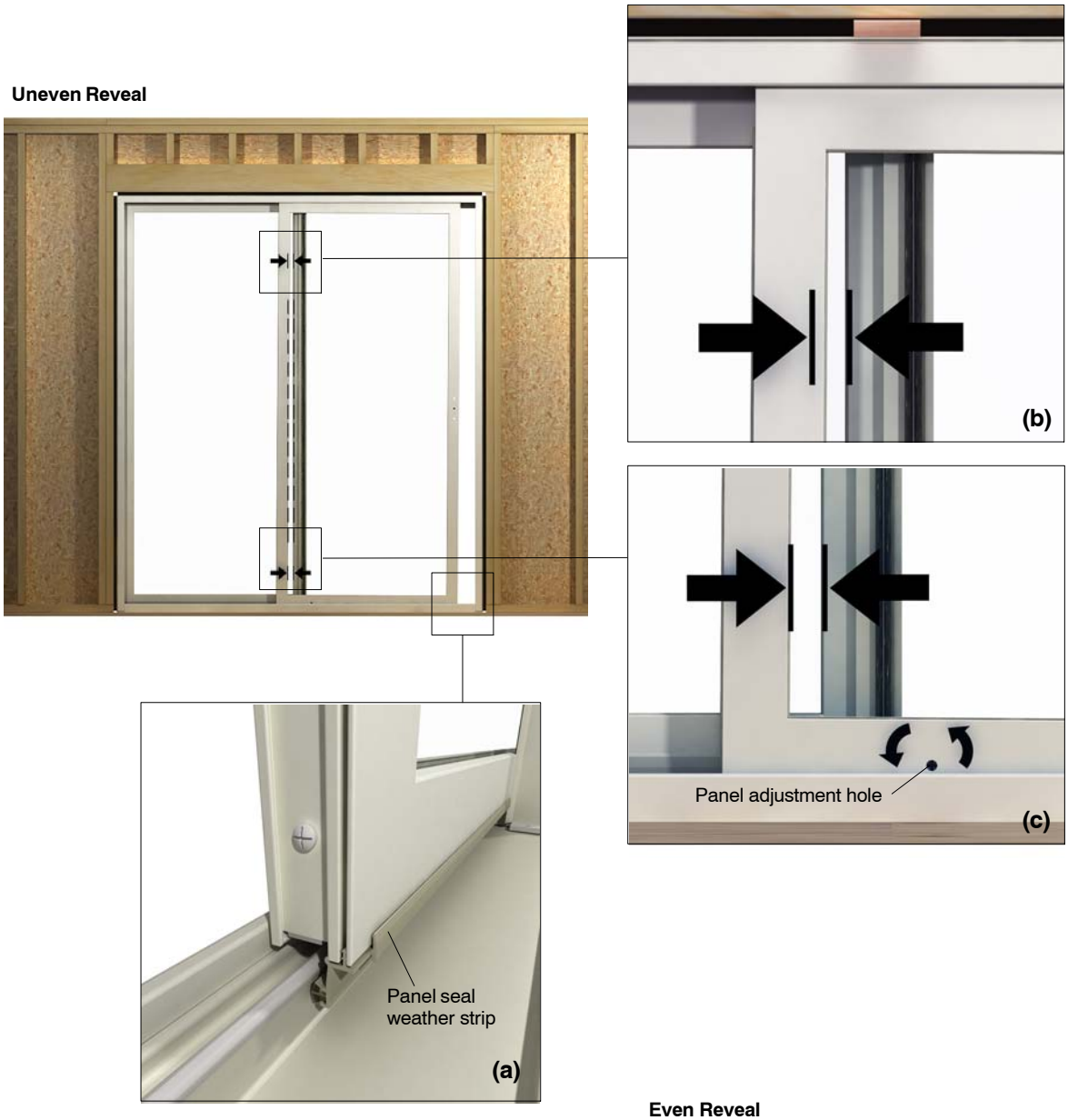

Even Reveal

Operator Panel Adjustment

1. While adjusting the door, always make sure the panel seal or sill weather strip is in contact with the sill track. Raise or lower both rollers evenly to adjust. See figure 8a.

2. Open the operator and align the daylight opening (DLO) on the operator panel with the interlock. Obtain an even reveal by raising or lowering the rollers on the bottom of the panel with a Phillips screwdriver. See figure 8b and 8c.

3. When adjusting is complete cover holes with plugs provided.

SERVICE – REMOVING THE OPERATOR PANEL

CAUTION: Panels are heavy. It is recommended to get help from another person to remove and replace door panels.

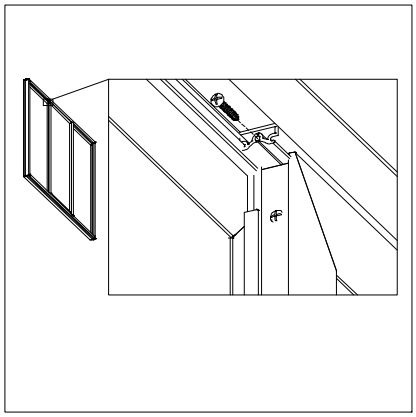

1. Lower operator panel (if 9080 unit, remove screw, then remove panel extension block). Slide operator panel open.

2. Grasp the panel firmly and lift the panel off the track, straight up into the head jamb.

3. Swing the bottom of the panel out so the rollers clear the track.

HINT: *On units installed in a rough opening it may be necessary to remove the panel seal first. Slide a stiff putty knife between the seal and the panel and push down working your way down the panel. Pull the seal out and away from the panel and set aside.*

Replace panel seal prior to reinstallation of panel.

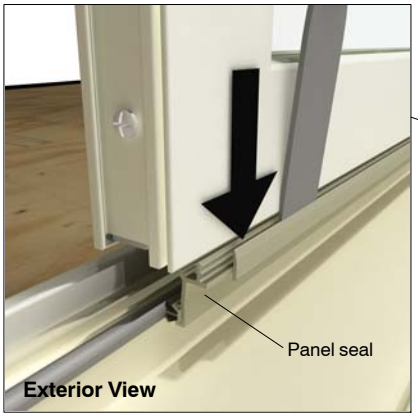

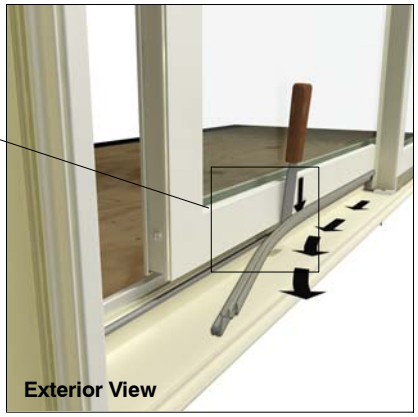

SERVICE – REMOVING THE STATIONARY PANEL

CAUTION: Panels are heavy. It is recommended to get help from another person to remove and replace door panels.

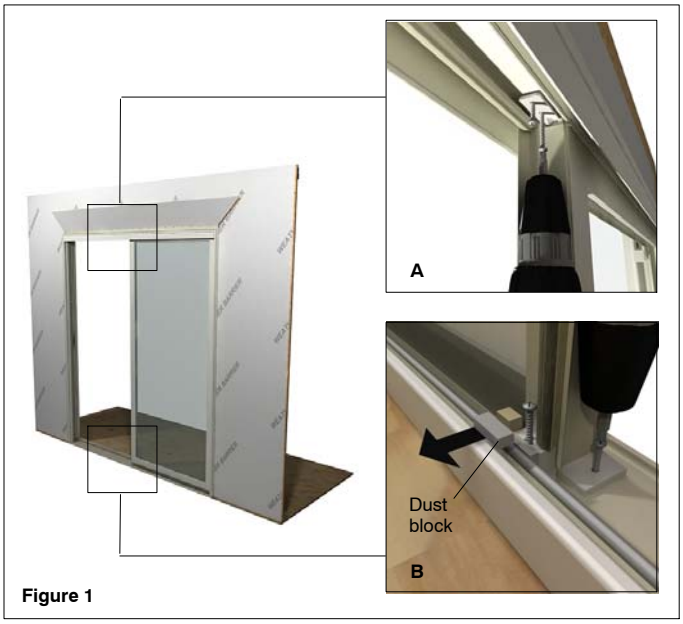

Figure 1

Figure 2

1. With the operator panel removed, work from the exterior to remove the two screws from the leveling block end cap at the sill. Peel back the dust block to reveal the 2nd screw. These screws secure the panel to the sill. See figure 1B.
2. Remove the two screws in the header, attached to the head jamb stationary panel bracket. Your panel is now free to move. See figure 1A.
3. Grasp the panel firmly and slide it toward the locking jamb a minimum of 5″ (127). This will expose the stationary panel head jamb spacers at the header. Continue to slide the panel until the two spacers are free and can be removed. See figure 2.

Figure 3

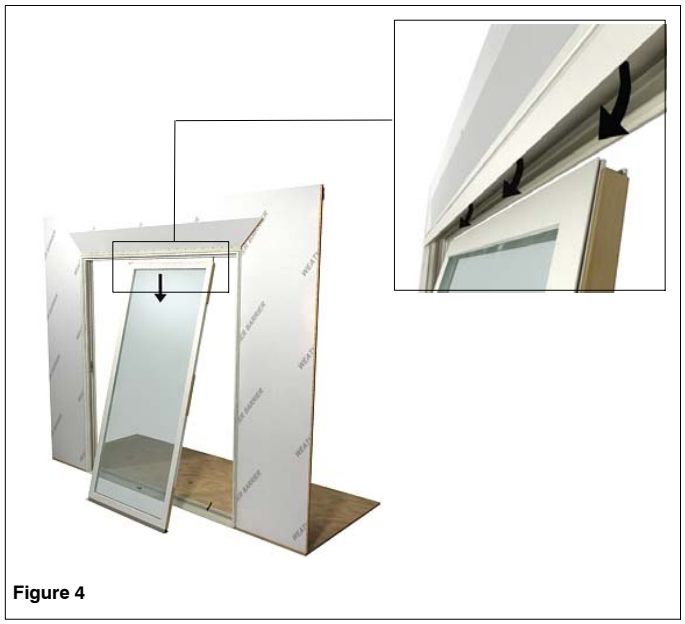

Figure 4

4. Lift the panel into the head jamb and swing the bottom of the panel out towards the exterior, clearing the track. Use care with the leveling block end cap making sure it does not get hung up on the sill when swinging the bottom of the panel out. See figure 3.
5. Still at an angle, lower the panel slightly to clear the screen channel on the top exterior of the door, and remove. See figure 5.

Install Keeper

Once the door is properly fastened to the opening and the door operates correctly, install and adjust the keeper as shown below.

1. Use the predrilled holes in the locking jamb to fasten the keeper to the jamb and rough opening. Shim and fasten with the # 8 x 3″ installation screws provided

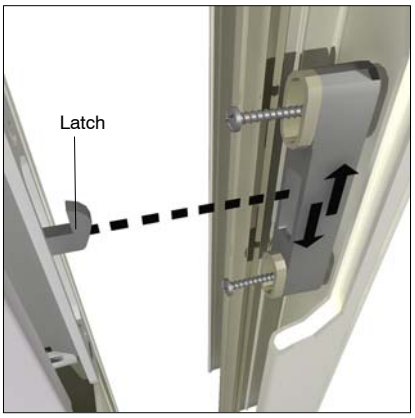

2. To adjust the keeper, move the operator toward the locking jamb and engage the lever on the lock so the mortise lock latch is engaged. Align the top of the hole on the keeper with the latch.

MORTISE LOCK ADJUSTMENT/REMOVAL

Tools needed: Standard screwdriver
#2 Phillips screwdriver

NOTE: Before adjusting the mortise lock latch, check position of keeper and latch. Adjust keeper as required.

1. After the door and keeper are aligned, adjust the latch pull by turning the adjustment screw with a standard screwdriver clockwise to move the latch out and counterclockwise to move the latch in from the keeper. See illustration 5.
2. The operator panel should be pulled snug by the lock. If properly adjusted, slight resistance should be felt at the end of the turn lever travel when locking.
3. Check for proper panel and/or lock operation and adjust as necessary.

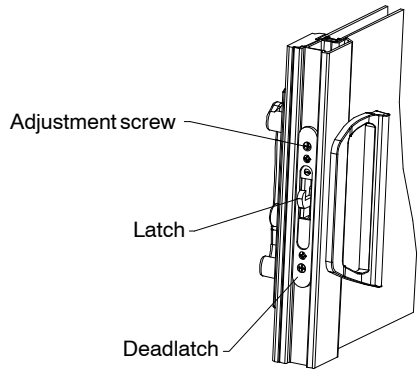

5