CHAPTER 11

INTEGRITY OUTSWING FRENCH DOOR

Table of Contents

	PAGE
History	11.2
Part Identification – XX Operator	11.3
Part Identification – X Operator	11.4
Part Identification – O Stationary	11.5
Parts	
Hardware	11.6
Wood	11.13
Weather Strip and Vinyl	11.15
Aluminum	11.18
Installation Kits	11.20
Fasteners	11.21
Panel Replacement	11.24
Grille Replacement	11.25
Service	
Head Jamb Strike Field Applied Instruction – Pre 8/31/09	11.26
Field Applied Non–Handed Hinge Replacement – 02–22–2010 to present (see IIFD Chapter)	11.28

NOTE: For door transom information see Chapter 6 Round Top/Polygon.

ATTENTION:

- Specification and technical data are subject to change without notice.
- Numbers listed in parentheses ( ) are metric equivalents in millimeters rounded to the nearest whole number.

HISTORY

PRODUCED	UNIT TYPE	FEATURES OR CHANGES	DISCONTINUED
March 2007	Outswing French Door	Unit features 3/4″ insulating Low E II tempered glass with Argon; mortise style multi–point locking system; keyed handle, 4 9/16″ and 6 9/16″ depths; adjustable hinges, solid wood interior, oak sill liner. The Integrity Outswing French Door is available in one panel (2665, 2668, 2680, 3065, 3068, 3080) stationary or operator and two panel (5065, 5068, 5080, 6065, 6068, 6080) jamb hinged configurations. Factory mulling is available (depending on configuration). Available in white, pebble, or bronze exterior colors; bare or white interior finishes. Handle sets available in White, Almond Frost, and Brass PVD, Satin Nickel PVD, or Oil Rubbed Bronze PVD finishes. Hinges available in White, Pebble Gray, Dark Brown, Coastal Satin Nickel, or Coastal Brass finishes.	Present
November 2007	Outswing French Door	Evergreen exteriors introduced.	Present
March 2008	Outswing French Door	Cashmere exteriors introduced March 17, 2008.	Present
June 2008	Outswing French Door	Impact products introduced June, 2008.	Present
July 2008	Outswing French Door	Cottage SDL lite cut made available for Wood–Ultrex. Refer to product bulletin #99.	Present
May 2009	Outswing French Door	LoĒ^3 366™ glass option introduced. Call number sizes 2–8 and 5–4 added.	Present
August 2009	Outswing French Door	Header strike plate redesign	Present
February 2010	Outswing French Door	Introduced new non handed hinge design	Present
August 2012	Outswing French Door	August 27, 2012: Introduced Wood–Ultrex Ebony exterior and exterior casing options.	Present

PART IDENTIFICATION

2 PANEL OPERATOR – XX

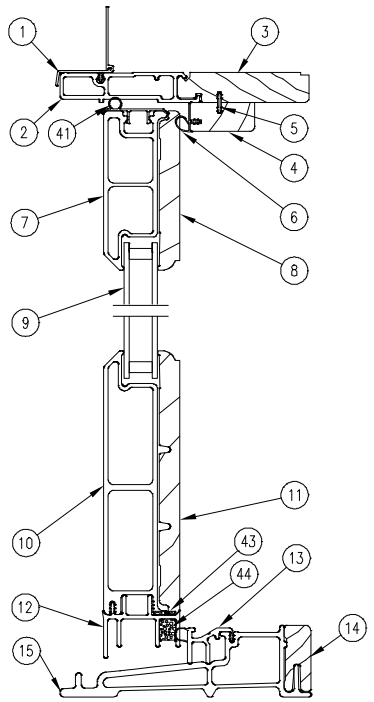

HEAD JAMB & SILL DETAIL

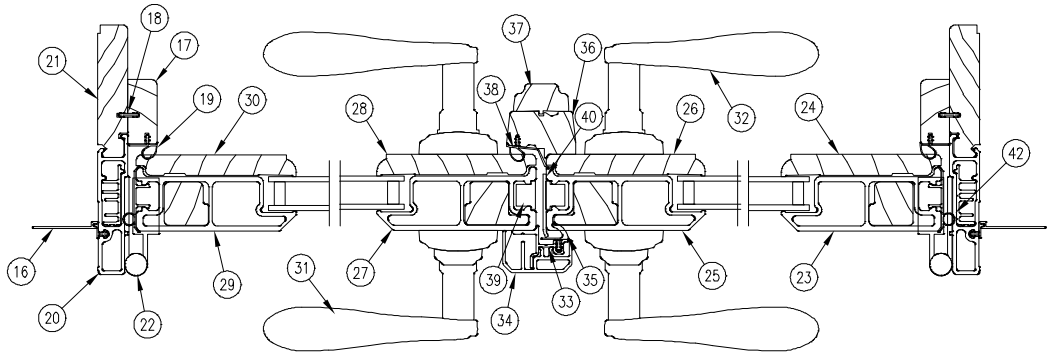

JAMB DETAIL

NOTE: XX CONFIGURATION SHOWN

NOTE: Not to scale; specifications subject to change without notice.

1. Head Jamb Nailing Fin/Drip Cap
2. Head Jamb (Ultrex)
3. Head Jamb Liner
4. Head Jamb Panel Stop
5. Head Jamb Connecting Barb
6. Head Jamb Weather Strip
7. Top Rail (Ultrex)
8. Top Rail
9. Insulated Glass
10. Bottom Rail (Ultrex)
11. Bottom Rail
12. Sweep
13. Sill Weather Strip
14. Oak Sill Liner
15. Sill (Ultrex)
16. Jamb Nailing Fin
17. Jamb Panel Stop
18. Jamb Connecting Barb
19. Jamb Weather Strip
20. Jamb (Ultrex)
21. Jamb Liner
22. Adjustable Hinge
23. Secondary Hinge Stile (Ultrex)
24. Secondary Hinge Stile
25. Secondary Locking Stile (Ultrex)
26. Secondary Locking Stile
27. Primary Locking Stile (Ultrex)
28. Primary Locking Stile
29. Primary Hinge Stile (Ultrex)
30. Primary Hinge Stile
31. Exterior Handle
32. Interior Handle
33. Exterior Astragal Base
34. Exterior Astragal
35. Exterior Astragal Weather Strip
36. Interior Astragal Base
37. Interior Astragal
38. Interior Astragal Weather Strip
39. Mortise Lock
40. Secondary Strike Plate
41. Top Rail Weather Strip
42. Stile Panel Weather Strip
43. Foam Tape
44. Foam

PART IDENTIFICATION

ONE PANEL – 1 PANEL X

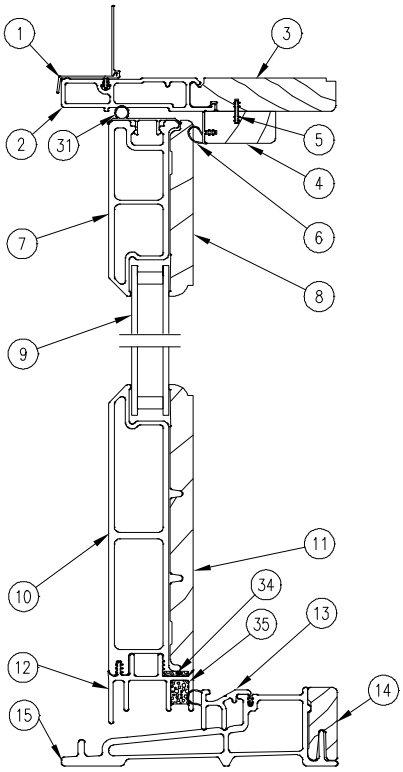

HEAD JAMB & SILL DETAIL

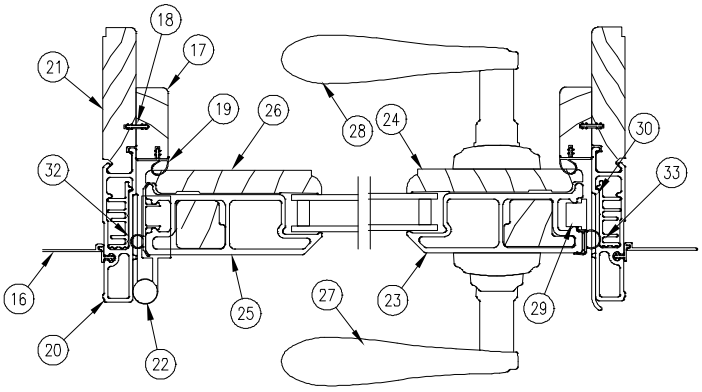

JAMB DETAIL

NOTE: Not to scale; specifications subject to change without notice.

1. Head Jamb Nailing Fin/Drip Cap
2. Head Jamb (Ultrex)
3. Head Jamb Liner
4. Head Jamb Panel Stop
5. Head Jamb Connecting Barb
6. Head Jamb Weather Strip
7. Top Rail (Ultrex)
8. Top Rail
9. Insulated Glass
10. Bottom Rail (Ultrex)
11. Bottom Rail
12. Sweep
13. Sill Weather Strip
14. Oak Sill Liner
15. Sill (Ultrex)
16. Jamb Nailing Fin
17. Jamb Panel Stop
18. Jamb Connecting Barb
19. Jamb Weather Strip
20. Jamb (Ultrex)
21. Jamb Liner
22. Adjustable Hinge
23. Locking Stile (Ultrex)
24. Locking Stile
25. Hinge Stile (Ultrex)
26. Hinge Stile
27. Exterior Handle
28. Interior Handle
29. Mortise Lock
30. Strike Plate
31. Top Rail Weather Strip
32. Stile Panel Weather Strip
33. Locking Stile Panel Weather Strip
34. Foam Tape
35. Foam

PART IDENTIFICATION

SINGLE PANEL STATIONARY

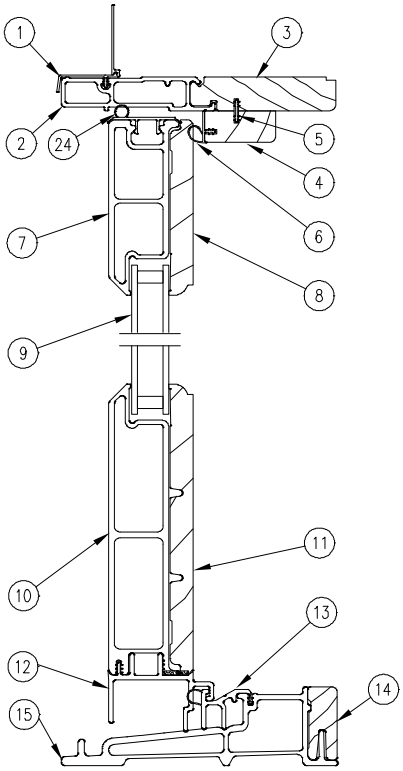

HEAD JAMB & SILL DETAIL

JAMB DETAIL

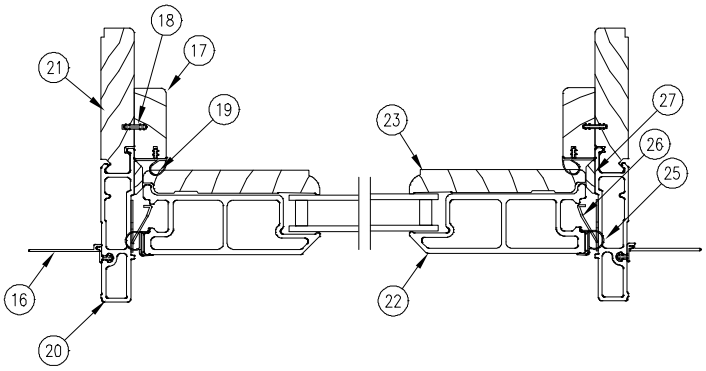

NOTE: Not to scale; specifications subject to change without notice.

1. Head Jamb Nailing Fin/Drip Cap
2. Head Jamb (Ultrex)
3. Head Jamb Liner
4. Head Jamb Panel Stop
5. Head Jamb Connecting Barb
6. Head Jamb Weather Strip
7. Top Rail (Ultrex)
8. Top Rail
9. Insulated Glass
10. Bottom Rail (Ultrex)
11. Bottom Rail
12. Sweep
13. Sill Weather Strip
14. Oak Sill Liner
15. Sill (Ultrex)
16. Jamb Nailing Fin
17. Jamb Panel Stop
18. Jamb Connecting Barb
19. Jamb Weather Strip
20. Jamb (Ultrex)
21. Jamb Liner
22. Stile (Ultrex)
23. Stile
24. Top Rail Weather Strip
25. Stile Panel Weather Strip
26. Stationary Panel Clip
27. Stationary Jamb Block

When ordering replacement Outswing French Door parts specify:

1. Part number;
2. Description;
3. Handing;
4. Quantity.

ILLUSTRATION *NOT TO SCALE*	DESCRIPTION	OPER./COLOR	PART NO.
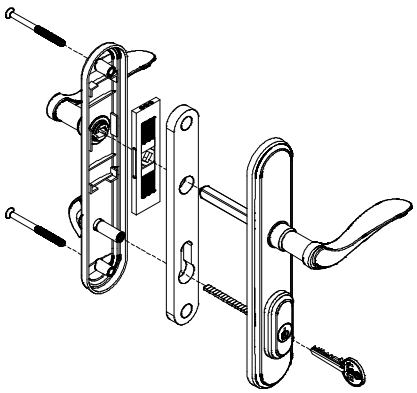 *NOTE: Some assembly required* *NOTE: LH shown*	**Handle Set Package – Primary** *NOTE: Usage dates: March 2007 to present* *Includes:* *2 – Escutcheon plates* *1 – Keyed cylinder w/keys* *1 – Spring cassette* *1 – Foam gasket* *1 – Spindle* *2 – Escutcheon plate screws* RH LH	BS (PVD) WH AF SN (PVD) ORBZ (PVD) BS (PVD) WH AF SN (PVD) ORBZ (PVD)	11869241 11869243 11869245 11869247 11869249 11869231 11869233 11869235 11869237 11869239
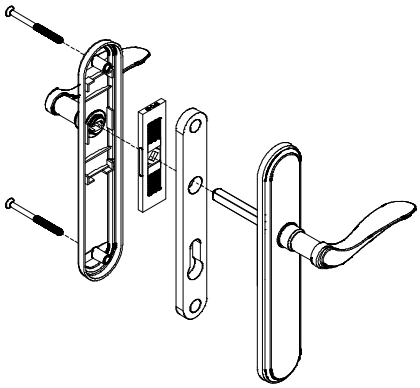 *NOTE: Some assembly required* *NOTE: LH shown*	**Lever Handle Assembly Kit – Secondary** *NOTE: Usage dates: March 2007 to present* *Includes:* *2 – Escutcheon plates* *1 – Spring cassette* *1 – Spindle* *1 – Foam gasket* *2 – Escutcheon plate screws* RH LH	BS (PVD) WH AF SN (PVD) ORBZ (PVD) BS (PVD) WH AF SN (PVD) ORBZ (PVD)	11869242 11869244 11869246 11869248 11869253 11869232 11869234 11869236 11869238 11869240
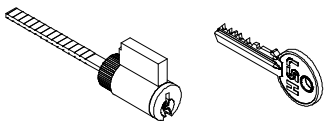	**Keyed Cylinder with Keys** *NOTE: Schlage cylinder*		11860963
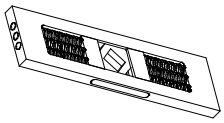	**Spring Cassette**		11860960
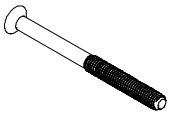	**Escutcheon Plate Screws** *NOTE: 1–M5 X 58 machine screw*	BS (PVD) WH AF SN (PVD) ORBZ (PVD)	11805189 11805188 11805187 11805190 11805191

ILLUSTRATION *NOT TO SCALE*	DESCRIPTION	OPER./COLOR	PART NO.
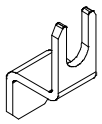	**Z–Clip** *Includes:* *–#8 x 5/16″ Screws*		11860967
	Replacement Washers		11860964
	Split Ring		11860966
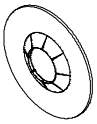	**Clip, Thumb Turn**		11860972
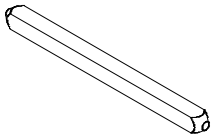	**Spindle**		11860962

ILLUSTRATION *NOT TO SCALE*	DESCRIPTION	OPER./COLOR	PART NO.
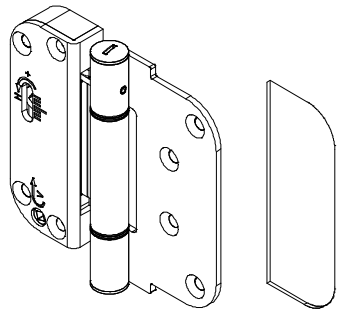 *NOTE: Screws are color matched*	**Non Handed Hinge Kit** *NOTE: Usage: 02/22/2010 to present* *3 kits for 6/5 and 6/8 heights* *4 kits for 8/0 heights* *Includes:* *3 – 8x5/8″ screws* *4 – 8x1 1/2″ screws* *1 – 8x2 1/2″ screw* *1 – Hinge gasket* *1 – Hinge*	BS (PVD) SN (PVD) PB DKBN WH EG CS EB	11897225 11897224 11897223 11897222 11897228 11897226 11897227 11897229
Set hinge 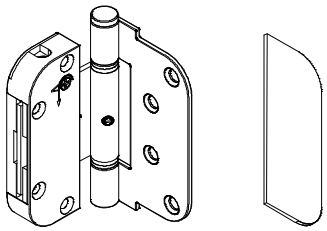 *NOTE: Center hinge(s) with vertical adjustment. Hinges are non–handed and may be set as 'left' or 'right' using pin placement*	*Set Hinge* *USAGE: 3/2007–02/21/2010* **Set Hinge Kit** *1 kit for 6/5 and 6/8 heights* *1 kit for 8/0 heights* *Includes:* *4 – #8 x 1 1/2″ Phillips flat head screws (into panel)* *3 – #8 x 5/8″ Phillips flat head screws (into jamb)* *1 – #8 x 2 1/2″ Installation screw (into jamb)* *1 – Gasket* *1 – Hinge*	WH PB DKBN EG CS SN Coastal BS Coastal	11896631 11896596 11896595 11896635 11896695 discontinued discontinued
Guide hinge 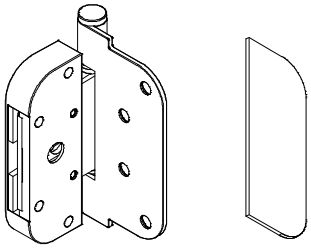 *NOTE: Top or bottom hinge with horizontal adjustment. Hinges are non–handed and may be set as 'left' or 'right' using pin placement*	*Guide Hinge* *USAGE: 3/2007–02/21/2010* **Guide Hinge Kit** *2 needed for 6/5, 6/8 heights* *3 needed for 8/0 heights* *Includes:* *4 – #8 x 1 1/2″ Phillips flat head screws (into panel)* *3 – #8 x 5/8″ Phillips flat head screws (into jamb)* *1 – #8 x 2 1/2″ Installation screw (into jamb)* *1 – Gasket* *1 – Hinge*	WH PB DKBN EG CS SN Coastal BS Coastal	11896592 11896591 11896590 11896639 11896694 discontinued discontinued
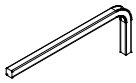	**Hinge Adjustment Tool**		10502561

ILLUSTRATION *NOT TO SCALE*	DESCRIPTION	OPER./COLOR	PART NO.
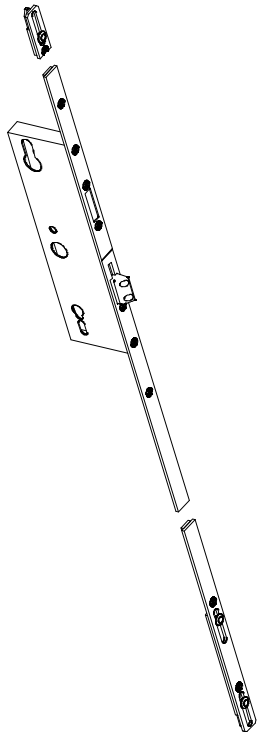	**Active Multi−Point** *Includes:* *1 − Lock assembly with faceplate, deadbolt, latch and shootbolts* *11 (13 on 8/0) − #8 x 1 1/2″ Phillips flat head screw (SS)* CN 6−5 CN 6−8 CN 8−0	SS	11896553 11896554 11896555
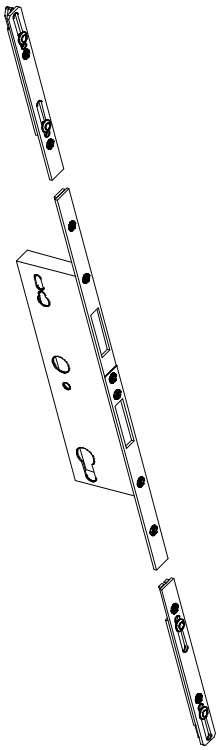	**Inactive Multi−Point** *Includes:* *1 − Lock assembly with faceplate, and shootbolts* *11 (13 on 8/0) − #8 x 1 1/2″ Phillips flat head screw (SS)* CN 6−5 CN 6−8 CN 8−0	SS	11896556 11896557 11896558

ILLUSTRATION *NOT TO SCALE*	DESCRIPTION	OPER./COLOR	PART NO.
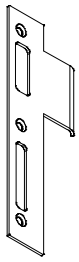 *NOTE: X–RH shown*	**Strike Plate – Locking Jamb** *Includes:* *1 – Jamb strike plate* *2 – #8 x 5/8″ flat head screws* *1 – #8 x 2 1/2″ Installation screws*		
	RH	SS BS	11896674 11896676
	LH	SS BS	11896675 11896677
NOTE: LH shown	**Strike Plate – Secondary Lock** *Includes:* *1 – Strike plate* *Fastened with:* *Multipoint lock Torx head screws*		
	RH	SS BS	11862525 11862515
	LH	SS BS	11862526 11862516
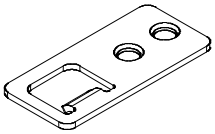	**Head Jamb Strike, X** *USAGE: 8/31/2009 – present* *Includes:* *1 – Strike* *2 – #8 x 5/8″ Phillips flat head screws*		
	RH LH	SS SS	11897009 11897007
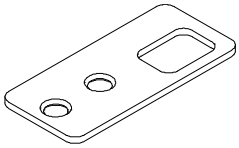	**Head Jamb Strike, X** *USAGE: 3/2007–8/30/2009* *Includes:* *1 – Strike* *2 – #8 x 5/8″ Phillips flat head screws*	BS	11896679
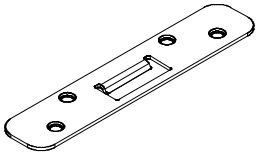	**Head Jamb Strike, XX** *USAGE: 8/31/2009 – present* *Includes:* *1 – Strike* *2 – #8 x 5/8″ Phillips flat head screws* *2 – 2 1/2″ Installation screws*	SS	11897011
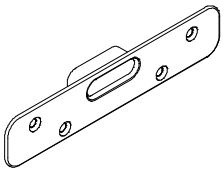	**Head Jamb Strike, XX** *USAGE: 3/2007–8/30/2009* *Includes:* *1 – Strike* *2 – #8 x 5/8″ Phillips flat head screws* *2 – 2 1/2″ Installation screws*	BS	11896552

ILLUSTRATION *NOT TO SCALE*	DESCRIPTION	OPER./COLOR	PART NO.
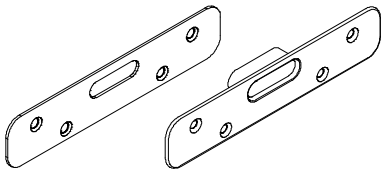	**Header Jamb Strike, – Impact, XX** *Includes:* *1–Header strike cover* *1–Header Strike* *2 – #8 x 2 1/2″ Installation screws* *1 – #8 x 5/8″ Phillips flat head screw*	BG	11896737
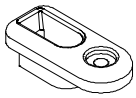	**Sill Strike, X** *Includes:* *1 – Strike* *1 – #8 x 5/8″ Phillips truss head vinyl screw*	BG	11896678
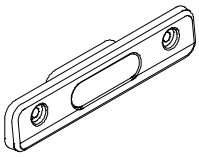	**Sill Strike, XX** *Includes:* *1 – Strike* *2 – #8 x 3/4″ Phillips flat head machine screws (through sill plate)*	BG	11896550
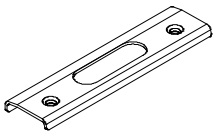	**Sill Strike Plate, XX** *Includes:* *1 – Strike plate* *2 – #8 x 3/4″ Phillips flat head machine screws*	SS	11896551
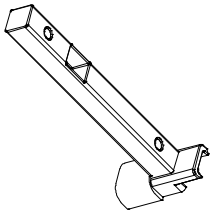	**Bottom Shoot Bolt Guide** *Includes:* *1 – Guide* *1 – #8 x 2 1/2″ Phillips truss head screw* *1 – #8 x 1″ Phillips truss head screw*	RH LH	11896565 11896566
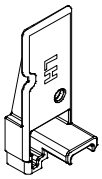	**Top Shoot Bolt Guide** *Includes:* *1 – Guide* *1 – #8 x 1″ Phillips pan head screw*	RH LH	11896563 11896564
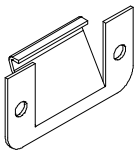	**Stationary Panel Clip** *Includes:* *1 – Stationary panel clip* *2 – Rivets*	BK	11896680

ILLUSTRATION *NOT TO SCALE*	DESCRIPTION	OPER./COLOR	PART NO.
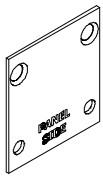	**Stationary Panel Bracket** *Includes:* *1 – Bracket* *2 – #8 x 1″ Phillips truss head screws (panel)* *2 – #8 x 1/2″ Phillips flat head screws (frame)*	SS	11896683
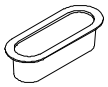	**Bolt Plug, Locking Jamb**	BK	11862552
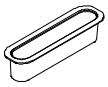	**Latch Plug, Locking Jamb**	BK	11862553

WOOD PARTS

When ordering replacement wood parts specify:

1. Part number;
2. Profile number;
3. Call number or rough opening;
4. Handing;
5. Bare wood or white interior.

ILLUSTRATION *NOT TO SCALE*	DESCRIPTION		LENGTH	BARE WOOD PART NO.	WHITE INTERIOR PART NO.
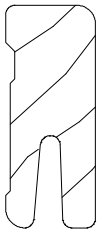	**Sill Liner** W2528				
		2–6	30 3/16″ (767)	31507727	N/A
		2–8	32 3/16″ (818)	31507728	N/A
		3–0	36 3/16″ (919)	31507731	N/A
		5–0	58 7/8″ (1495)	31508350	N/A
		5–4	62 7/8″ (1597)	31518354	N/A
		6–0	70 7/8″ (1800)	31518355	N/A
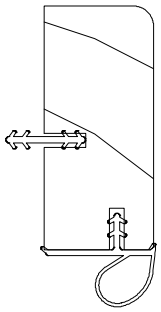	**Panel Stop – Head Jamb** W9524 *Includes:* *W9524 Panel stop* *V803 Connector barb* *V796 Frame weather strip*				
		2–6	28 15/16″ (735)	11896630	11896672
		2–8	30 15/16″ (786)	11896690	11896692
		3–0	34 15/16″ (913)	11896671	11896673
		5–0	57 5/8″ (1464)	11896546	11896548
		5–4	61 5/8″ (1565)	11896691	11896693
		6–0	69 5/8″ (1768)	11896547	11896549
	Panel Stop – Jamb W9524 *Includes:* *W9524 Panel stop* *V803 Connector barb* *V796 Frame weather strip*				
		6–5	76 15/32″ (1942)	11896540	11896543
		6–8	78 31/32″ (2006)	11896541	11896544
		8–0	92 15/32″ (2425)	11896542	11896545
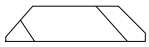	**Stationary Jamb Block** W8679		6″ (152)	31500020	N/A

ILLUSTRATION *NOT TO SCALE*	DESCRIPTION	LENGTH	BARE WOOD PART NO.	WHITE INTERIOR PART NO.
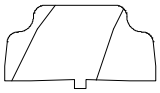	**Interior Astragal Cover 6–5 and 6–8** W7554 *Includes:* *1 – Astragal cover* *2 – #8 x 1 1/4″ Phillips bugle head screws*			
	6–5		11896582	11896585
	6–8		11896583	11896586
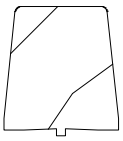	**Interior Astragal Cover 8–0** W9608 *Includes:* *1 – Astragal cover* *2 – #8 x 1 1/4″ Phillips bugle head screws*			
	8–0	91 3/32″ (2314)	11896584	11896587
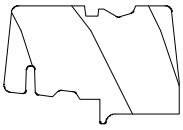	**Interior Astragal Base** W9609 *Includes:* *1 – Astragal base* *2 – #8 x 2″ Phillips flat head screws*			
	6–5	76 3/32″ (1933)	11896576	11896579
	6–8	78 19/32″ (1996)	11896577	11896580
	8–0	92 3/32″ (2339)	11896578	11896581

WEATHER STRIP AND VINYL

When ordering Integrity Outswing Door weather strip specify:

1. Part number;
2. Description;
3. Length;
4. Quantity.

ILLUSTRATION *NOT TO SCALE*	DESCRIPTION		LENGTH/ COLOR	PART NO.
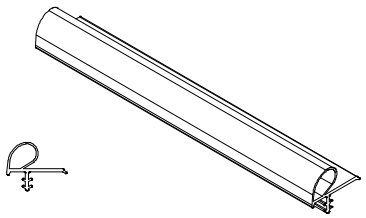	**Frame Weather Strip – Head Jamb** V796			
		2–6	28 15/16″ (735)	15978926
		2–8	30 15/16″ (786)	15978928
		3–0	34 15/16″ (887)	15978930
		5–0	57 5/8″ (1464)	15978950
		5–4	61 5/8″ (1565)	15978954
		6–0	69 5/8″ (1768)	15978960
	Frame Weather Strip – Jamb V796			
		6–5	76 15/32″ (1942)	15978965
		6–8	78 31/32″ (2006)	15978968
		8–0	92 15/32″ (2349)	15978980
	Frame Weather Strip V796	Lineal	150″ (3810)	15978150
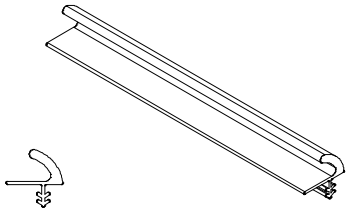	**Jamb/Head Jamb Weather Strip** V019 *NOTE: Exterior astragal only*			
		6–5	77 23/32″ (1974)	15971565
		6–8	80 7/32″ (2038)	15971568
		8–0	93 23/32″ (2380)	15971580
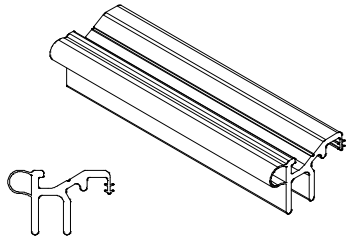	**Sill Weather Strip** V776			
		2–6	28 21/32″ (728)	15979126
		2–8	30 21/32″ (778)	15979128
		3–0	34 21/32″ (880)	15979130
		5–0	57 11/32″ (1456)	15979150
		5–4	31 11/32″ (796)	15979154
		6–0	69 11/32″ (1761)	15979160
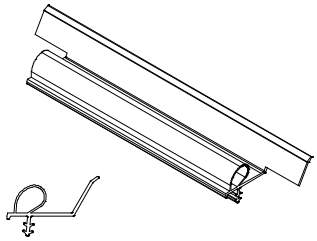	**Astragal Weather Strip – Interior** V1560			
		6–5	77 5/16″ (1964)	15971665
		6–8	79 13/16″ (2027)	15971668
		8–0	93 5/16″ (2370)	15971680

WEATHER STRIP AND VINYL

ILLUSTRATION *NOT TO SCALE*	DESCRIPTION	LENGTH/ COLOR	PART NO.
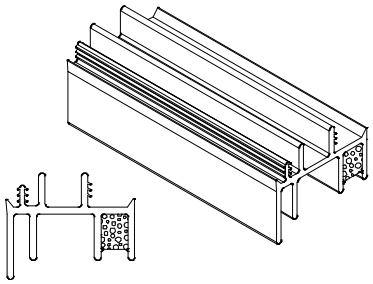	**Sweep – Operator Panel** V1547 *Includes:* *1 – Sweep* *2 – #8 x 2 1/2″ Phillips truss head screws* *2 – #8 x 1 1/4″ Phillips truss head screws*		
	2–6/5–0 3–0/6–0	28 19/32″ (726) 34 19/32″ (879)	11896561 11896562
	Sweep – Stationary V1547 *Includes:* *1 – Sweep* *2 – #8 x 2 1/2″ Phillips truss head screws*		
	2–6/5–0 2–8/5–4 3–0/6–0	28 19/32″ (726) 30 19/32″ (777) 34 19/32″ (879)	11896681 11896952 11896682
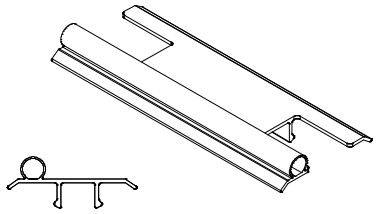	**Panel Stile Weather Strip** V1550 *NOTE: Includes weather strip between hinges and at panel ends (actual lengths vary).*		
	6–5 6–8 8–0		11896684 11896685 11896686
	Panel Top Rail Weather Strip V1550		
	2–6 2–8 3–0	28 19/32″ (726) 30 19/32″ (777) 34 19/32″ (879)	15970226 15970228 15970230
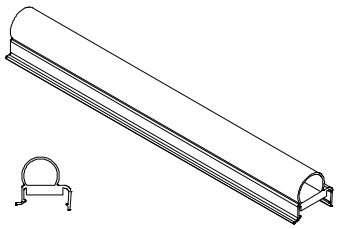	**Panel Locking Stile Weather Strip** V1556		
	6–5 6–8 8–0	76 23/32″ (1949) 79 7/32″ (2012) 92 23/32″ (2355)	15972765 15972768 15972780

WEATHER STRIP AND VINYL

ILLUSTRATION *NOT TO SCALE*	DESCRIPTION	LENGTH/ COLOR	PART NO.
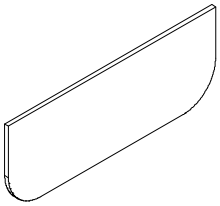	**Hinge Gasket**	BG	11705150
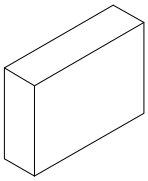	**Jamb/Sill Plug**	BG	10500136
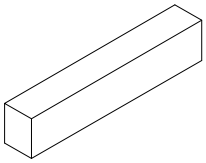	**Jamb Weather Strip Plug**	BG	10500154
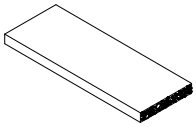	**Frame Sealant Foam**	GY	10500142
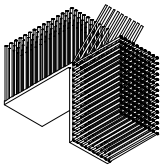	**Dust Block**		15600010

When ordering Integrity Outswing Door Parts specify:

1. Part number;
2. Description;
3. Length;
4. Quantity.

ILLUSTRATION *NOT TO SCALE*	DESCRIPTION	LENGTH/ COLOR	PART NO.
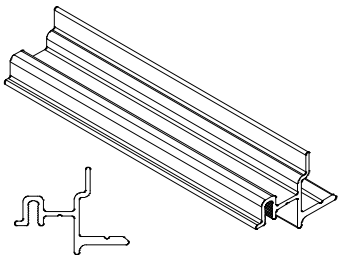	**Astragal Base – Exterior** A1432 *Includes:* *1 – Astragal base* *9 – #8 x 5/8″ Phillips pan head screws*		
	6–5	75 5/8″ (1921)	11896567
	6–8	78 1/8″ (1984)	11896568
	8–0	91 5/8″ (2327)	11896569
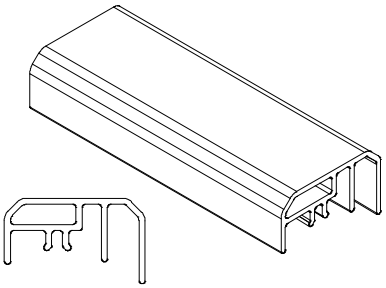	**Astragal Cap – Exterior** A1431 *Includes:* *1 – Astragal cap* *8 – #8 x 5/8″ Phillips pan head screws*		
		SW	
	6–5	77 23/32″ (1974)	11896570
	6–8	80 7/32″ (2038)	11896571
	8–0	93 23/32″ (2380)	11896572
		PB	
	6–5	77 23/32″ (1974)	11896573
	6–8	80 7/32″ (2038)	11896574
	8–0	93 23/32″ (2380)	11896575
		BZ	
	6–5	77 23/32″ (1974)	19455665
	6–8	80 7/32″ (2038)	19455668
	8–0	93 23/32″ (2380)	19455680
		EG	
	6–5	77 23/32″ (1974)	19455765
	6–8	80 7/32″ (2038)	19455768
	8–0	93 23/32″ (2380)	19455780
		CS	
	6–5	77 23/32″ (1974)	18545865
	6–8	80 7/32″ (2038)	18545868
	8–0	93 23/32″ (2380)	18545880
		EB	
	6–5	77 23/32″ (1974)	19455965
	6–8	80 7/32″ (2038)	19455968
	8–0	93 23/32″ (2380)	19455980

ILLUSTRATION *NOT TO SCALE*	DESCRIPTION	LENGTH/ COLOR	PART NO.
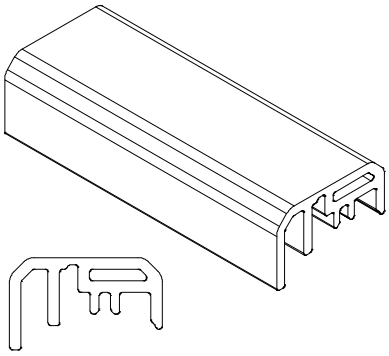	**Astragal Cap – Impact, Exterior** A1464 *Includes:* *1 – Cap* *8 – #8 x 5/8″ Phillips panhead screws*		
		SW	
	6–5	77 3/4″ (1975)	19455466
	6–8	80 1/4″ (2038)	19455469
	8–0	93 3/4″ (2381)	19455481
		PB	
	6–5	77 3/4″ (1975)	19455566
	6–8	80 1/4″ (2038)	19455569
	8–0	93 3/4″ (2381)	19455581
		BZ	
	6–5	77 3/4″ (1975)	19455666
	6–8	80 1/4″ (2038)	19455669
	8–0	93 3/4″ (2381)	19455681
		EG	
	6–5	77 3/4″ (1975)	19455766
	6–8	80 1/4″ (2038)	19455769
	8–0	93 3/4″ (2381)	19455781
		CS	
	6–5	77 3/4″ (1975)	19455866
	6–8	80 1/4″ (2038)	19455869
	8–0	93 3/4″ (2381)	19455881
		EB	
	6–5	77 3/4″ (1975)	11897251
	6–8	80 1/4″ (2038)	11897252
	8–0	93 3/4″ (2381)	11897253

ILLUSTRATION *NOT TO SCALE*	DESCRIPTION	LENGTH/ COLOR	PART NO.
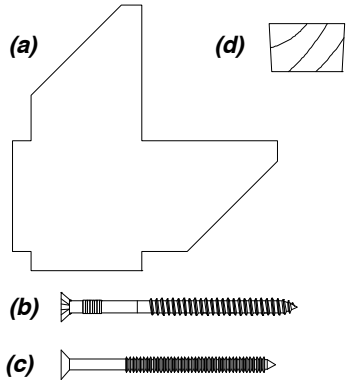	**Installation Kits** *Includes:* *1 – Nailing fin corner gasket (a)* *1 – 3/16″ flat head masonry screw (b)* *1 – #8 x 2 1/2″ flat head SS screw (c)* *1 – #8 x 2 1/2″ flat head BS screw (c)* *2 – #8 x 2 1/2″ flat head BG screws (c)* *1 – Wood plug (d)* *1 – Set of installation instructions*		11896597
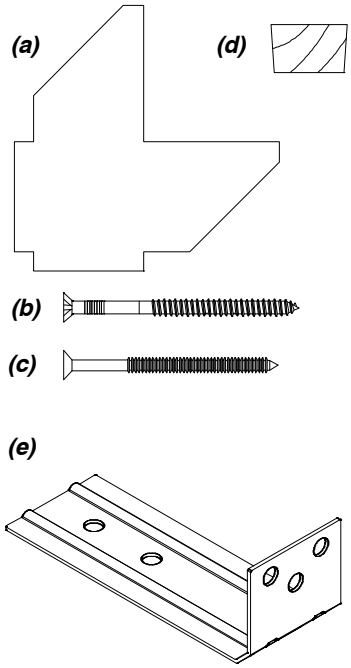	**IOFD Impact Nailing Fin Installation Kit** *Includes:* *1–Nail fin corner gasket (a)* *1–3/16″ x 2 3/4″ flat head masonry screw (b)* *1 – #8 x 2 1/2″ flat head SS screw (c)* *1 – #8 x 2 1/2″ flat head BS screw (c)* *2 – #8 x 2 1/2″ flat head BG screws (c)* *1–Wood plug (d)* *17–IOFD Installation clip (e)* *51–Installation clip screws – pn 11800758* *1–set of iInstallation instructions* *1–Supplemental Installation Instruction*		11896808
	IOFD Impact Nailing Fin Installation Kit *Includes:* *1– clip*		11896810
	IOFD Impact Nailing Fin Installation Kit *Includes:* *20–clips*		11896809
	Hinge Screw Packages *Includes:* *25 – #8 x 2 1/2″ Flat head screws* *NOTE: This screw package is also used on Impact products.*	SW DKBN BS PB SN EG CS EB	11882703 11882704 11882705 11882706 11882707 11882708 11882709 11882740

FASTENERS

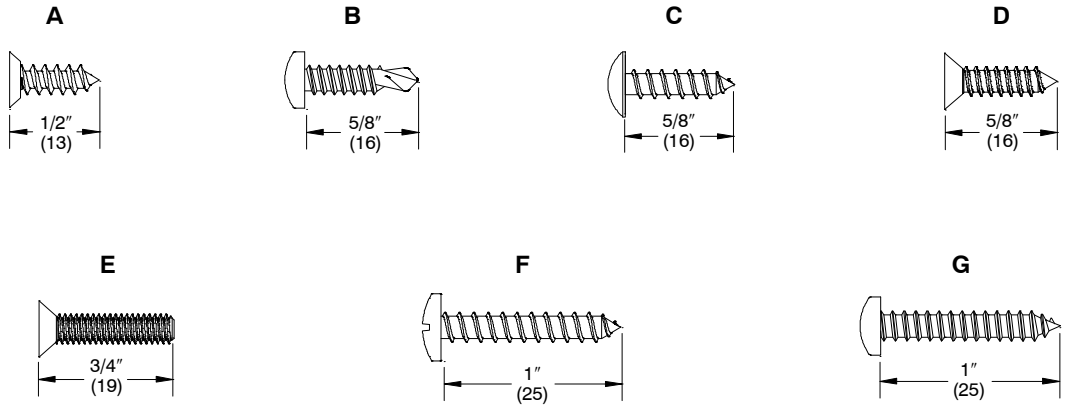

Illustrations to Scale

PART ID	DESCRIPTION AND USAGE	COLOR	PART NO.
A	**#8 x 1/2″ Phillips Flat Head Screw** **Usage:** • Through stationary panel bracket into jamb	ZC	11800502
B	**#8 x 5/8″ Phillips Pan Head Screw, Self–drilling/Tapping** **Usage:** • Through exterior astragal base into panel • Through astragal base into astragal cap	SS	11800498
C	**#8 x 5/8″ Phillips Truss Head Screw** **Usage:** • Through X sill strike	BG	11805193
D	**#8 x 5/8″ Phillips Flat Head Screw** **Usage:** • Head jamb strike to head jamb • Hinges to jamb • Locking jamb strike plate to jamb	SS BG BS SW DKBN PB EG CS EB	11805180 11805152 11805153 11805155 11805156 11805157 11805149 11805146 11805144
E	**#8 x 3/4″ Phillips Flat Head Machine Screw** **Usage:** • Through sill strike plate and sill strike (XX)	SS	02052281
F	**#8 x 1″ Phillips Pan Head Screw** **Usage:** • Through top and bottom shootbolt guides	SS	11805185
G	**#8 x 1″ Phillips Truss Head Screw** **Usage:** • Through stationary panel brackets into panel	ZYD	11800867

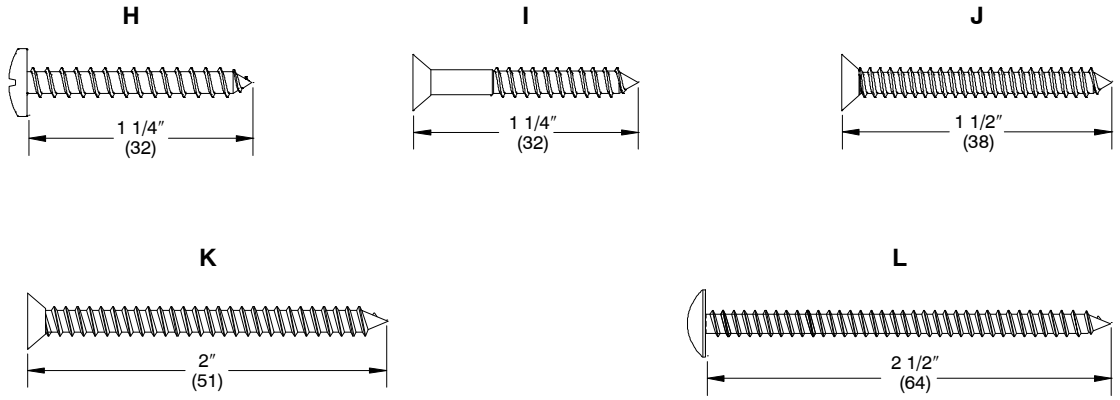

Illustrations to Scale

PART ID	DESCRIPTION AND USAGE	COLOR	PART NO.
H	**#8 x 1 1/4″ Phillips Truss Head Screw** **Usage:** • Through sweep into panel	SS	11805193
I	**#8 x 1 1/4″ Phillips Flat Head 2/3 Thread Screw** **Usage:** • Astragal cap to astragal base	ZYD	11805179
J	**#8 x 1 1/2″ Phillips Flat Head Screw** **Usage:** • Hinge to panel • Multipoint lock to panel (SS only)	BS WH DKBN PB SS EG CS EB	11805171 11805169 11805170 11805174 11805173 11805177 11805182 11805140
K	**#8 x 2″ Phillips Flat Head Screw** **Usage:** • Through astragal base into panel	ZYD	11800868
L	**#8 x 2 1/2″ Phillips Truss Head Screw** **Usage:** • Through sweep into panel • Through bottom shoot bolt guide into panel	SS	11805151

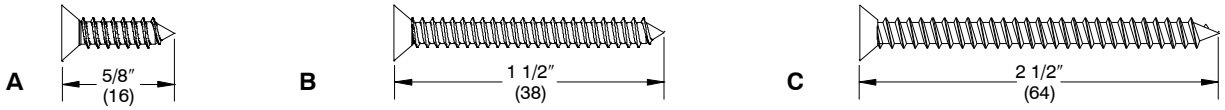

Color matched screws used with door hinge kits

PART ID	DESCRIPTION AND USAGE	COLOR	PART NO.
A	**#8 x 5/8″ Phillips Flat Head 2/3 Thread Screw – PKG 25** **Usage:** • Hinge	WH BZ BS SN PB EG CS EB	11882723 11882724 11882725 11882726 11882727 11882728 11882729 11882730
B	**#8 x 1 1/2″ Phillips Flat Head Screw – PKG 25** **Usage:** • Hinge	WH BZ BS SN PB EG CS EB	11882713 11882714 11882715 11882716 11882717 11882718 11882719 11882750
C	**#8 x 2 1/2″ Phillips Flat Head Screw – PKG 25** **Usage:** • Hinge	WH BZ BS SN PB EG CS EB	11882703 11882704 11882705 11882706 11882707 11882708 11882709 11882740

ORDERING REPLACEMENT OUTSWING FRENCH DOOR PANELS (OFD)

To order replacement panels specify:

1. Size;
2. Operator (primary or secondary) or stationary;
3. Handing;
4. Stone White, Pebble Gray, Bronze, Evergreen, Cashmere or Ebony exterior;
5. Glazing;
6. Bare wood or white interior.

Panel Sizes for Outswing French Door (OFD)
Units Manufactured 2007 to present

Daylight Opening to Panel OM

Daylight Width + 7 1/4″ (181) = OM Width of Panel
Daylight Height + 9 5/8″ (244) = OM Height of Panel

NOTE: Daylight opening is the measurement of visible glass.

WIDTH		HEIGHT	
Size	**OM Width**	**Size**	**OM Height**
2–6	28 19/32″ (726)	6–5	76 23/32″ (1949)
2–8	30 19/32″ (777)	6–8	79 5/16″ (2015)
3–0	34 19/32″ (879)	8–0	83 3/32″ (2111)
5–0	28 19/32″ (726)		
5–4	30 19/32″ (777)		
6–0	34 19/32″ (879)		

EXTERIOR VIEW

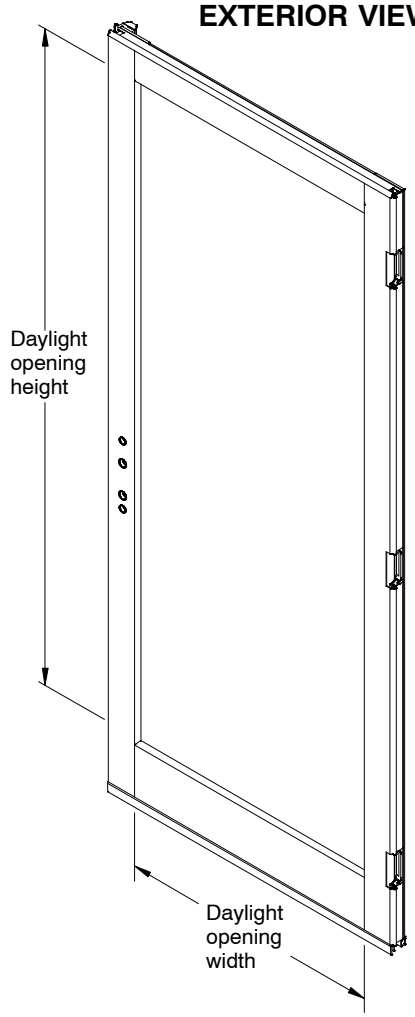

(Operator Panel Shown)

Panels Include:

Operating: Lock, Sweep w/gasket, Wood Backers, Weather Strip, Shoot Bolt Guides and Astragal.

Stationary: Sweep w/gasket, Stationary Bracket, Stile Weather Strip and Eurogroove Block.

ORDERING REPLACEMENT GRILLES

When ordering replacement grilles specify:

1. Call number (using chart below).
2. Interior finish or bare

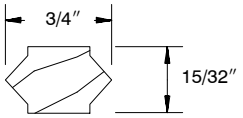

W7340

GRILLE END PROFILE

WIDTH			
CN	**PANEL OM**	**DLO**	**GRILLE CUT**
CN2–6	28 19/32″ (726)	21 11/32″ (542)	3W
CN2–8	30 19/32″ (777)	23 11/32″ (593)	3W
CN3–0	34 19/32″ (879)	27 11/32″ (695)	3W
CN5–0	28 19/32″ (726)	21 11/32″ (542)	3W
CN5–4	30 19/32″ (777)	23 11/32″ (593)	3W
CN6–0	34 19/32″ (879)	27 11/32″ (695)	3W

HEIGHT			
CN	**PANEL OM**	**DLO**	**GRILLE CUT**
CN6–5	76 23/32″ (1949)	67 3/32″ (1704)	5H
CN6–8	79 5/16″ (2012)	69 19/32″ (1768)	5H
CN8–0	92 23/32″ (2355)	83 3/32″ (2111)	6H
–	–	–	–

Head Jamb Strike X Configuration

You Will Need To Supply	
Safety glasses	Pencil
Rotary tool	Phillips screwdriver

1. Current strike plate configuration

2. Remove the strike plate. Mark area with pencil as indicated.

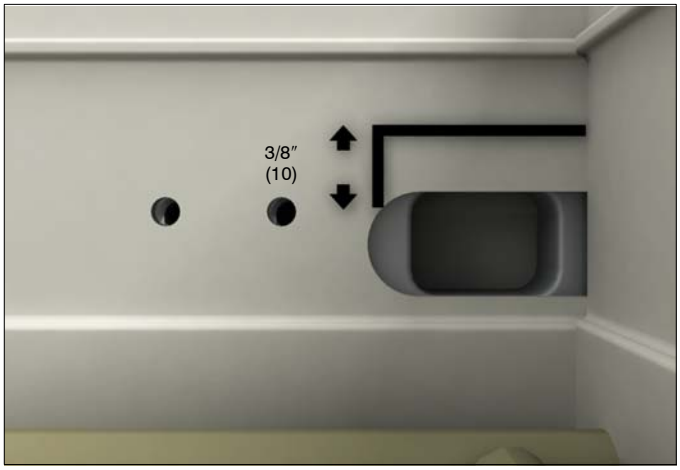

3. Rout marked area with a rotary or other tool to the depth of the Ultrex.

NOTE: Use caution when routing to avoid damaging the corner key.

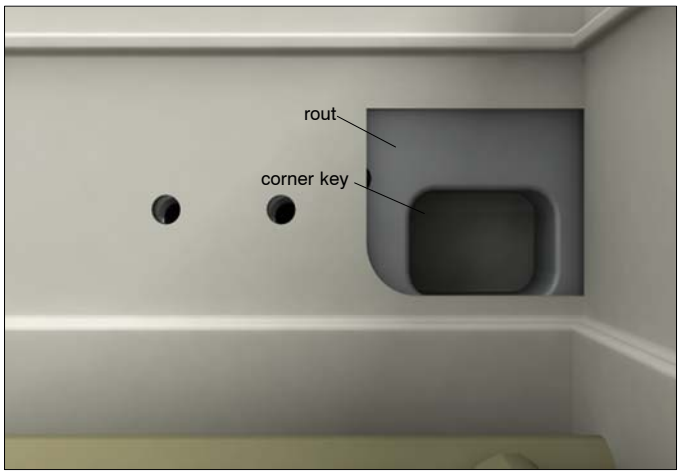

4. Install new strike plate.

Head Jamb Strike XX Configuration

You Will Need To Supply	
Safety glasses	Pencil
Rotary tool	Phillips screwdriver

1. Current strike plate configuration

2. Remove the strike plate. Mark area with pencil as indicated.

3. Rout marked area with a rotary or other tool to the depth of the Ultrex.

NOTE: Use caution when routing to avoid damage to the aluminum backer behind the Ultrex

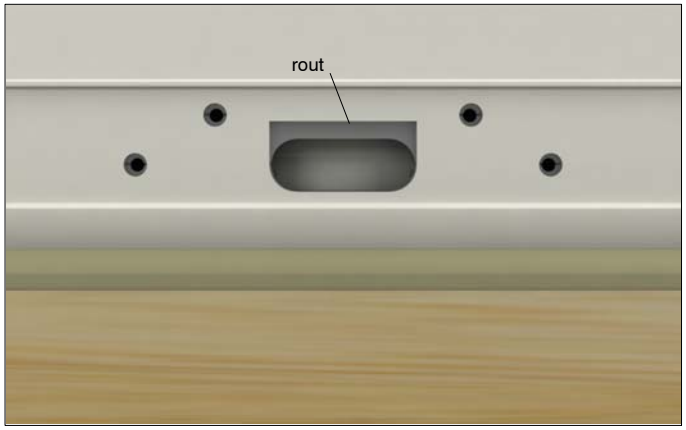

4. Install new strike plate.

FIELD APPLIED / NON–HANDED HINGE REPLACEMENT

The instructions for Field Applied/Non–Handed Hinge Replacement Integrity Inswing/Outswing French Door manufactured 2–22–2010 to present are located in the Inswing French Door Chapter.