CHAPTER 6

INTEGRITY ROUND TOP/POLYGON

Table of Contents

	PAGE
History	6.2
Part Identification – Casement Polygon Stand Alone	6.4
Part Identification – Double Hung, Glider, Patio Door Polygon Stand Alone	6.5
Part Identification – Casement Round Top Stand Alone	6.6
Part Identification – Double Hung Round Top Stand Alone	6.7
Part Identification – Sliding Patio Door/Inswing French Door Round Top	6.8
Parts	
Miscellaneous	6.9
Wood Parts	6.10
Round Top Grilles	6.12
Round Top Glass Replacement Shapes	6.13
SDL Spacer Bar – Open Hub	6.14
RT 1 – Casement and Double Hung One Lite and GBG – LoĒ^2 272®	6.15
RT 1 – Casement and Double Hung One Lite and GBG – LoĒ^3 366®	6.16
RT 1 – Casement and Double Hung One Lite and GBG – LoĒ 180™	6.17
RT 7, RT 8 RT 29 – Casement Awning, Door One Lite and GBG – LoĒ^2 272®	6.18
RT 7, RT 8 RT 29 – Casement Awning, Door One Lite and GBG – LoĒ^3 366®	6.19
RT 7, RT 8 RT 29 – Casement Awning, Door One Lite and GBG – LoĒ 180™	6.20
Polygon Glass Shapes	6.21
Polygon Glass Replacement LoĒ^2 272®	6.22
Polygon Glass Replacement LoĒ^3 366®	6.24
Polygon Glass Replacement LoĒ 180™	6.26
Obsolete Parts	
3/1/04 Door Resizing – Wood	6.28
3/1/04 Door Resizing – Glass	6.29
Service	
Reglazing Round Top Direct Glaze Sash	6.30
Reglazing Polygon Direct Glaze Sash	6.34
Round Top Field Applied Jamb Extension–Mulled Units	6.38
Field Applied Jamb Extension Polygon/Round Top	6.39

ATTENTION:

- Specification and technical data are subject to change without notice.
- Numbers listed in parentheses ( ) are metric equivalents in millimeters rounded to the nearest whole number.

HISTORY

PRODUCED	UNIT TYPE	FEATURES OR CHANGES	DISCONTINUED
July 1995	Round Top	Unit features direct glazed 3/4″ Low E II glass with Argon, 4 9/16″ jambs. Fiberglass exterior available in white or pebble gray and W1366 wood interior trim.	Present Arctic White – Feb. 2002
October 1995	Round Top	Additional sizes introduced for Casement, Awning and Double Hung.	Present
October 1996	Round Top	5 5/16″ and 6 13/16″ jamb extension available for field application.	December 2000
May 1997	Round Top	Introduced IRT–7336 unit for the Integrity Patio Door (6068), available for field mulling.	Present
September 1997	Round Top	Introduced white grilles–between–the–glass (GBG) simulated divided lite option. Plastic hub (white) is used for Round Top units.	Present
September 1997	Direct Glaze Transoms	Unit features direct glazed 3/4″ Low E II glass with Argon, 4 9/16″ jambs, pultruded fiberglass (Ultrex) exterior available in white or pebble gray, available in CN ICADG–7316 for the Casement 3–wide unit (ICA25–3w) and IPDDG–7316 for the Integrity Patio Door (6068). The IPDDG–7316 is available factory or field mulled to the Integrity Patio Door. White grilles–between–the–glass(GBG) simulated divided lite option is available for IPDDG 7316 and ISDDG 3716.	Present
October 1997	Round Top	Introduced an elliptical shape for the Integrity Patio Door (6068) and Casement 3–wide unit (ICA25–3w) available factory or field mulled.	Present
May 1998	Round Top	Eliminated the sill fiberglass nailing flange (replaced with vinyl flange).	Present
March 1999	Polygons	Unit features direct glazed 3/4″ Low E II glass with Argon, 4 9/16″ jambs, Pultruded fiberglass (Ultrex) exterior available in white or pebble gray. Units are available for Integrity Casement/Awning, Glider, Double Hung and Patio door products.	Present
November 1999	Polygons	V119 nailing fin (with drip cap) changed to V104 nailing fin (with drip cap removed) on all polygons except rectangular shapes.	Present
April 2000	Direct Glaze Rectangles	Introduced white grilles–between–the–glass (GBG) simulated divided lite option. Cuts limited to equal sized rectangular lites and a minimum 4–1/2” daylight opening.	Present
April 2000	Direct Glaze Rectangles	Added a 4 wide and 2 wide 2 high mulling option available factory mulled.	Present
December 2000	Round Top/ Polygon	6 13/16″ jamb extension available factory applied. 5 5/16″ jamb extension no longer available.	Present
March 2001	Round Top/ Polygon	Added white interior finish.	Present
February 2002	Round Top/ Polygon	Stone White replacing Arctic White as a standard color effective Feb. 4. Arctic White replacement parts available through the warranty period.	Present
March 2004	Round Top/ Polygon	Pebble exterior / White interior GBGs available 3/1/04. Standard 6–0 door width changed from 73 opening to 72 opening. 3616 and 7216 sizes added for Polygons. Standard 6–0 door width changed from 73 opening to 72 opening. 3616 and 7216 sizes added for Polygons. 36–2W and 7218 elliptical added for Round Tops effective 3/1/04.	Present
January 2005	Polygon/ Direct Glaze Transoms	Added IIFDDG 108 and ISFD/ISPDDG 107 widths to be mulled over three–wide doors.	Present
July 2006	Polygon/ Direct Glaze Transoms	SDL offered on all Wood/Ultrex Series windows and doors. 7/8″ wide bars with Ultrex exterior and wood interior. See Product Bulletin 66 for more details.	Present
September 2006	Polygon/ Direct Glaze Transoms	Prairie SDL and GBG Lite cuts made available for the Wood/Ultrex Series windows and doors. See Product Bulletin 70 for more details.	Present

PRODUCED	UNIT TYPE	FEATURES OR CHANGES	DISCONTINUED
March 2007	Polygon/ Direct Glaze Transoms	Bronze exteriors introduced.	Present
November 2007	Polygon/ Direct Glaze Transoms	Evergreen exteriors introduced.	Present
March 2008	Polygon/ Direct Glaze Transoms	Cashmere exteriors introduced March 17, 2008.	Present
July 2008	Polygon/ Direct Glaze Transoms	Cottage SDL lite cut made available for Wood–Ultrex. Refer to product bulletin #99.	Present
January 2009	Round Top	Added GBG open hub option for existing sizes.	Present
April 2010	Polygon/ Direct Glaze	Introduced tempered obscure glass.	Present
June 2010	Polygon/ Direct Glaze	Introduced the SDL Spacer Bar Glass option on LoĒ^3 366®	Present
April 2011	Polygon/ Direct Glaze Transoms	LoĒ 180™ glass option introduced.	Present
April 2012	Polygon/ Direct Glaze Round Top	Introduced the SDL Spacer Bar glass option on LoĒ^2 272® and LoĒ 180.	Present
April 2012	Polygon	Simulated Checkrail Bar option introduced.	Present
August 2012	Polygon/ Direct Glaze Round Top	August 27, 2012: Ebony exteriors for Wood–Ultrex introduced.	Present
February 2013	Polygon Direct Glaze	February 25, 2013: Introduced Tripane glass option utilizing a Casement frame.	Present

CASEMENT POLYGON

HEAD JAMB & SILL DETAIL

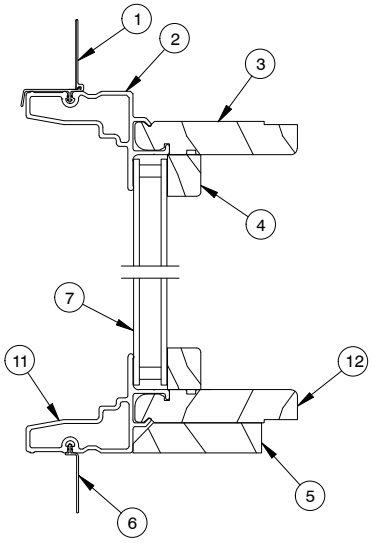

NOTE: Stand alone version shown, see Integrity ADM for mullion details

JAMB DETAIL

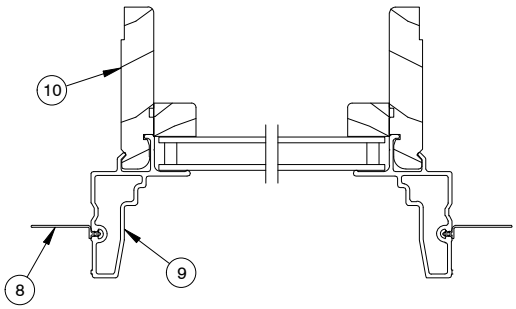

NOTE: Not to scale; specifications subject to change without notice.

1. Nailing Fin/Drip Cap
2. Head Jamb (Ultrex)
3. Head Jamb
4. Glazing Bead
5. Standing Block
6. Sill Nailing Fin
7. Insulating Glass
8. Jamb Nailing Fin
9. Jamb (Ultrex)
10. Jamb
11. Sill (Ultrex)
12. Sill

DOUBLE HUNG, GLIDER AND PATIO DOOR POLYGON

HEAD JAMB & SILL DETAIL

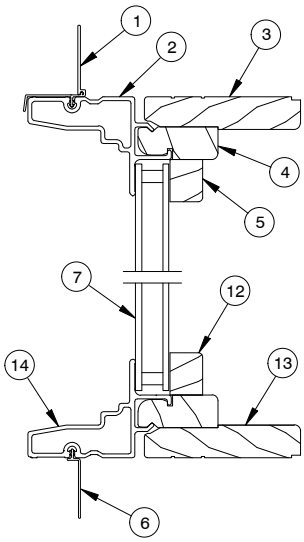

NOTE: Stand alone version shown, see Integrity ADM for mullion details

JAMB DETAIL

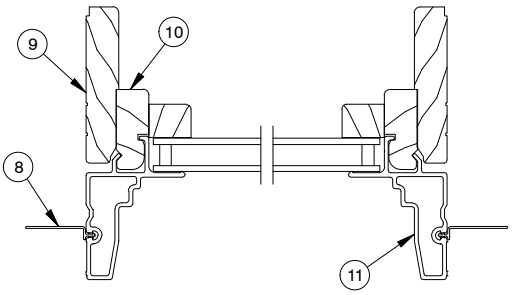

NOTE: Not to scale; specifications subject to change without notice.

1. Nailing Fin/Drip Cap
2. Head Jamb (Ultrex)
3. Secondary Head Jamb
4. Primary Head Jamb
5. Glazing Bead
6. Sill Nailing Fin
7. Insulating Glass
8. Jamb Nailing Fin
9. Secondary Jamb
10. Primary Jamb
11. Jamb (Ultrex)
12. Primary Sill
13. Secondary Sill

CASEMENT ROUND TOP

HEAD JAMB & SILL DETAIL

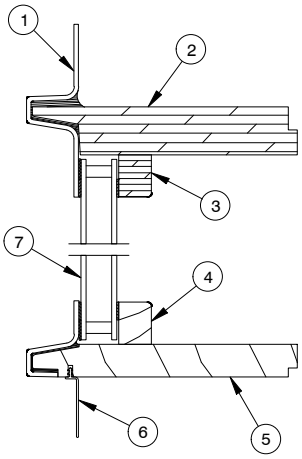

NOTE: Stand alone version shown, see Integrity ADM for mullion details

NOTE: Not to scale; specifications subject to change without notice.

1. Fiberglass Exterior
2. Laminated Frame
3. Laminated Glazing Bead
4. Glazing Bead
5. Sill
6. Sill Nailing Fin
7. Insulating Glass

DOUBLE HUNG ROUND TOP

HEAD JAMB & SILL DETAIL

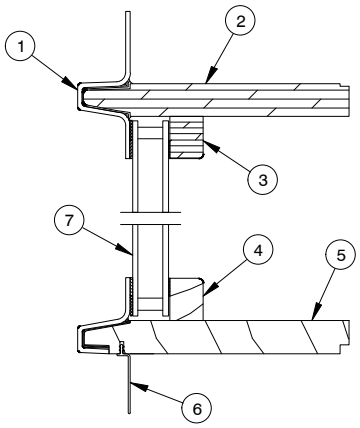

NOTE: Stand alone version shown, see Integrity ADM for mullion details

NOTE: Not to scale; specifications subject to change without notice.

1. Fiberglass Exterior
2. Laminated Frame
3. Laminated Glazing Bead
4. Glazing Bead
5. Sill
6. Sill Nailing Fin
7. Insulating Glass

SLIDING PATIO DOOR/INSWING FRENCH DOOR ROUND TOP

HEAD JAMB & SILL DETAIL

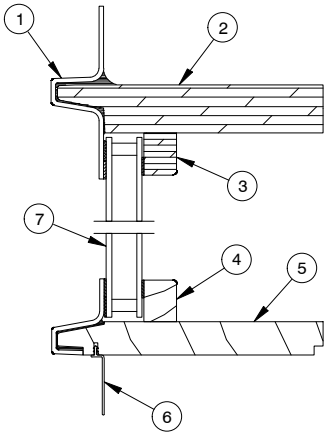

NOTE: Stand alone version shown, see Integrity ADM for mullion details

NOTE: Not to scale; specifications subject to change without notice.

1. Fiberglass Exterior
2. Laminated Frame
3. Laminated Glazing Bead
4. Glazing Bead
5. Sill
6. Sill Nailing Fin
7. Insulating Glass

When ordering replacement Integrity Round Top parts specify:

1. Description;
2. Profile;
3. Call number;
4. Part number
5. Bare wood or white interior.

ILLUSTRATION *NOT TO SCALE*	DESCRIPTION	CALL NUMBER	PART NO.
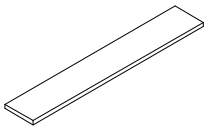	**Glazing Tape**	96″ (2438) 100′ (30 meters)	11406227 11406226
	Silicone Bump–On		10500208

WOOD PARTS

When ordering replacement Integrity Round Top parts specify:

1. Description;
2. Profile;
3. Call number;
4. Part number
5. Bare wood or white interior.

ILLUSTRATION *NOT TO SCALE*	DESCRIPTION	CALL NUMBER	BARE WOOD PART NO.	WHITE INTERIOR PART NO.
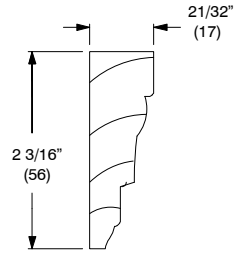	**Interior Trim*** W1366			
	Lineal	96 1/4″ (2445) 120″ (3048)	31760796 31760999	39230796 39230999
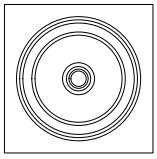	**Plinth Block** *NOTE: Pine*			
	Each		11850093	39299100
	Box of 50		10499100	

ILLUSTRATION *NOT TO SCALE*	DESCRIPTION	CALL NUMBER	BARE WOOD PART NO.	WHITE INTERIOR PART NO.
Replacement Stops 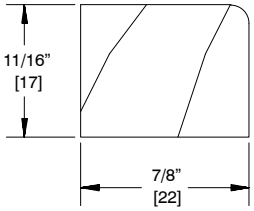	**IRT CA** W4160			
	Complete set	CN IQCIR 29–1W	37901290	39201290
		CN IRT 29–1W	37901291	39201291
		CN IRT 21–2W	37901212	39201212
		CN IRT 25–2W	37901252	39201252
		CN IRT 29–2W	37901292	39201292
		CN IRT 25–3W	37901253	39201253
	Elliptical stop only	CN IRTCA 7318	31507318	39207318
	Sill stop only	CN IRTCA 7318	31501755	39201755
	IRT DH W4160			
	Complete set	CN IRT 30–1W DH	37901301	39201301
		CN IRT 34–1W DH	37901341	39201341
		CN IRT 38–1W DH	37901381	39201381
		CN IRT 34–2W DH	37901342	39201343
		CN IRT 36–2W DH	37907337	39207337
	ISFD/ISPD/IIFD W4160			
	Complete set	CN IRTDR 7236	37907337	39207337
	Complete set	CN IRTDR 7218	37907320	39207320
	Elliptical stop only	CN IRTDR 7218	31507317	39207317
	Sill stop only	CN IRTDR 7218	31501759	39201759
	Lineal W4160			
	Lineal	96″ (2438)	32181296	39201796
	Lineal	120″ (3048) lineal	32181298	39201798
	Lineal	144″ (3658) lineal	32181297	39201797

ROUND TOP GRILLES/INTERIOR TRIM

When ordering replacement grilles or grille/interior trim:

1. Description;
2. Quantity;
3. Bare wood or white interior.

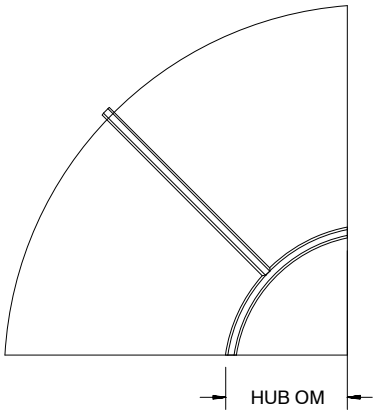

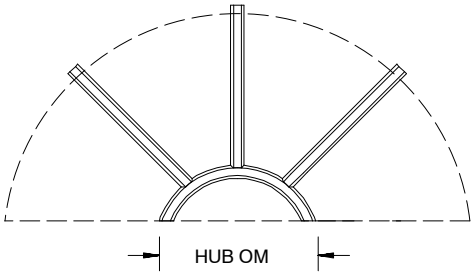

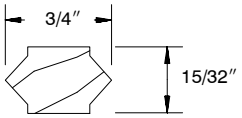

W7340

GRILLE END PROFILE

Glass and Grille/Interior Trim Information					
CN	**DLO Width**	**DLO Height**	**Grille Hub OM**	**Glass OM Width**	**Glass OM Height**
ICA 29–1W QR	23 11/16″ (602)	24 9/32″ (616)	8 17/32″ (211)	25 3/8″ (645)	25 27/32″ (656)
ICA 29–1W TH	23 21/32″ (600)	10 11/32″ (263)	8 17/32″ (211)	25 11/32″ (693)	11 7/8″ (302)
ICA 21–2W TH	35 11/16″ (906)	16 11/32″ (415)	20 3/4″ (527)	37 11/32″ (949)	17 7/8″ (454)
ICA 25–2W TH	43 23/32″ (1110)	20 11/32″ (517)	24 3/4″ (629)	45 11/32″ (1152)	21 7/8″ (556)
ICA 25–2W TH*	43 23/32″ (1110)	20 11/32″ (517)	22 11/32″ (568)	45 11/32″ (1152)	21 7/8″ (556)
ICA 29–2W TH	51 23/32″ (1314)	24 11/32″ (618)	21 1/32″ (531)	53 11/32″ (1355)	25 7/8″ (657)
ICA 29–2W TH**	51 23/32″ (1314)	24 11/32″ (618)	11″ (279)	53 11/32″ (1355)	25 7/8″ (657)
ICA 25–3W TH	67 3/4″ (1721)	32 11/32″ (822)	24 1/16″ (611)	69 3/8″ (1762)	33 7/8″ (860)
IRTCA 7318 ELLIPT.	68″ (1727)	14 7/16″ (367)	24 1/16″ (611)	69 17/32″ (1766)	15 15/16″ (405)
IDH 30–1W TH	26 3/16″ (665)	11 5/8″ (295)	8 13/16″ (224)	27 23/32″ (704)	13 1/16″ (332)
IDH 34–1W TH	30 7/32″ (768)	13 5/8″ (346)	10 1/8″ (257)	31 23/32″ (805)	15 1/16″ (383)
IDH 38–1W TH	34 9/32″ (870)	15 5/8″ (397)	16 25/32″ (426)	35 23/32″ (907)	17 1/16″ (433)
IDH 34–2W TH	63 13/16″ (1620)	30 3/8″ (772)	24 29/32″ (633)	65 1/4″ (1657)	31 13/16″ (808)
IDH 36–2W TH***	67 7/8″ (1724)	32 3/8″ (822)	26 5/32″ (664)	69 1/4″ (1759)	33 3/4″ (845)
IRTDR 7218 ELLIPT.	67 55/64″ (1724)	14 55/64″ (377)	24 27/64″ (620)	69 5/32″ (1757)	16 1/4″ (413)

* Denotes Round Top mulled over an ICA 4955
** Denotes Round Top mulled over an ICA 5763
*** Use over 6–0 doors

ILLUSTRATION *NOT TO SCALE*	DESCRIPTION	CALL NUMBER	PART NO.
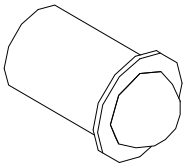	**Bullet Catch (Grille Fastener)**		02062398

When ordering replacement glass specify:

1. Description;
2. Call number;
3. Glazing;
4. Part number.

REPLACEMENT GLASS SHAPES

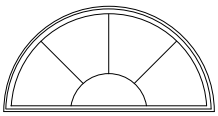

RT 1

**Open Hub, 3 Spokes
Sunburst Lite Cut
Wood Grilles,
GBGs
SDL w / Spacer**

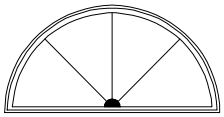

RT 1

**Solid Hub, 3 Spokes
Sunburst Lite Cut
GBGs**

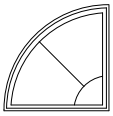

RT 7

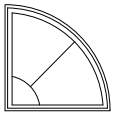

RT 8

**Open Hub, 1 Spoke
Sunburst Lite Cut
Wood Grilles
SDL w / Spacer**

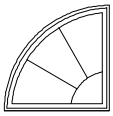

RT 7

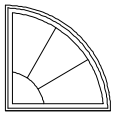

RT 8

**Open Hub, 2 Spokes
Sunburst Lite Cut
GBGs
SDL w / Spacer**

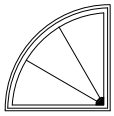

RT 7

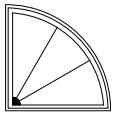

RT 8

**Solid Hub, 2 Spokes
Sunburst Lite Cut
GBGs**

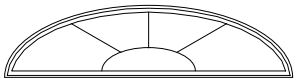

RT 29

**Open Hub, 3 Spokes
Elliptical
Sunburst Lite Cut
GBGs
SDL w / Spacer**

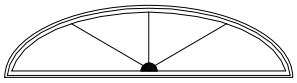

RT 29

**Solid Hub, 3 Spokes
Elliptical
Sunburst Lite Cut
GBGs**

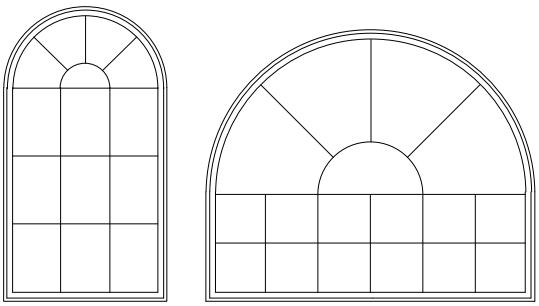

**Open Hub, 3 Spokes Sunburst Lite Cut
Wood Grilles
SDL w / Spacer**

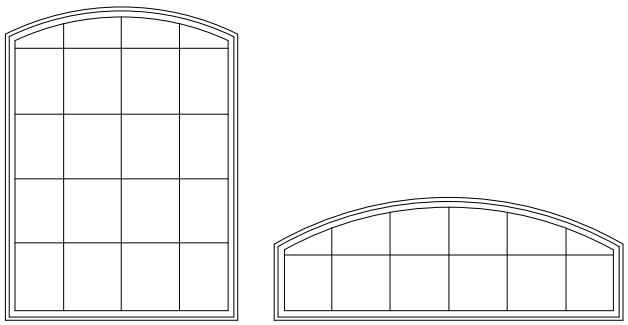

**Rectangular Lite Cut
Wood Grilles
GBG
SDL w / Spacer**

SDL Spacer Bar – Open Hub

NOTE: Replacement stops must be ordered when replacing Integrity Round Top glass

RT 1 – SDL SPACER BAR Glass – Open Hub							
RT1 – Casement, Awning and Picture				**RT1 – Double Hung**			
Fits over	**LoĒ³ 366**	**LoĒ² 272**	**LoĒ180**	**Fits over**	**LoĒ³ 366**	**LoĒ² 272**	**LoĒ180**
29–1W	2697205	12697205	19697205	30–1W	2697215	12697215	19697215
21–2W	2697207	12697207	19697207	34–1W	2697217	12697217	19697217
25–2W	2677209	12677209	19677209	38–1W	2697219	12697219	19697219
29–2W	2697211	12697211	19697211	34–2W	2697221	12697221	19697221
37–2W	2677213	12677213	19677213	36–2W	2697323	12697323	19697323
25–3W	2697213	12697213	19677213	**RT1 – Sliding Patio Door**			
49 Picture	2677209	12677209	19677209	7236	2667323	12667323	19667323
57 Picture	2677211	12677211	19697211	**RT1 – Sliding French Door**			
73 Picture	2687213	12687213	19677213	7236	2677323	12677323	19677323
				RT1 – Inswing/Outswing French Door			
				7236	2687323	12687323	19687323

RT 7, RT 8, RT 29 – SDL SPACER BAR Glass – Open Hub							
Fits over	**LoĒ³ 366**	**LoĒ² 272**	**LoĒ180**	**Fits over**	**LoĒ³ 366**	**LoĒ² 272**	**LoĒ180**
RT 7 – Casement / Awning				**RT 29 – Casement, Awning and Picture**			
29–1W	2697203	12697203	19697203	25–3W	2697319	12697319	19697319
RT 8 – Casement / Awning				37–2W	2677319	12677319	19677319
29–1W	2697201	12697201	19697201	73 Picture	2687319	12687319	19687319
				RT 29 – Sliding Patio Door			
				7218	2697321	12697321	19697321
				RT 29 – Sliding French Door			
				7218	2687321	12687321	19687321
				RT 29 – Inswing / Outswing French Door			
				7218	2677321	12677321	19677321

*SDL with spacer bar available on Open Hub units only

RT 1: Casement and Double Hung – LoĒ² 272®

NOTE: Replacement stops must be ordered when replacing Integrity Round Top glass

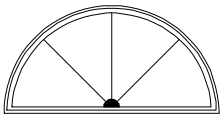

RT 1 – Solid Hub

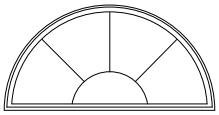

RT 1 – Open Hub

	LoĒ² 272®						
	One Lite	SW GBG	PB GBG	BZ GBG	EG GBG	CS GBG	EB GBG
Fits over	**RT 1 – Solid Hub – Casement**						
29–1W	12697204	12697234	12625113	12625112	12625111	32625114	32625113
21–2W	12697206	12697236	12637173	12637172	12637171	32637174	32637173
25–2W	12697208	12697238	12645213	12645212	12645211	32645214	32645213
29–2W	12697210	12697240	12653253	12653252	12653251	32653254	32653253
25–3W	12697212	12697242	12669333	12669332	12669331	32669334	32669333
Fits over	**RT 1 – Solid Hub – Double Hung**						
30–1W	12697214	12697244	12627132	1262732	1262731	32627134	32627133
34–1W	12697216	12697246	12631153	12631152	12631151	32631154	32631153
38–1W	12697218	12697248	12635173	12635172	12635171	32635174	32635173
34–2W	12697220	12697250	12665313	12665312	12665311	32665314	32665313
36–2W	12697322	12697259	12668333	12668332	12668331	32668334	32668333
Fits over	**RT 1 – Solid Hub – Sliding Patio Door**						
7236	12697322	12697259	12668333	12668332	12668331	32668334	32668333
Fits over	**RT 1 – Open Hub – Casement**						
29–1W CA	–	12525114	12525113	12525112	12525111	32525114	32525113
21–2W CA	–	12537174	12537173	12537172	12537171	32537174	32537173
25–2W CA	–	12545214	12545213	12545212	12545211	32545214	32545213
29–2W CA	–	12553254	12553253	12553252	12553251	32553254	32553253
57–1W CA	–	12563254	12563253	12563252	12563251	32563254	32563253
25–3W CA	–	12569334	12569333	12569332	12569331	32569334	32569333
Fits over	**RT 1 – Open Hub – Double Hung**						
30–1W TDH	–	12527134	12527133	12527132	12527131	32527134	32527133
34–1W TDH	–	12531154	12531153	12531152	12531151	32531154	32531153
38–1W TDH	–	12535174	12535173	12535172	12535171	32535174	32535173
34–2W TDH	–	12565314	12565313	12565312	12565311	32565314	32565313
36–2W	–	12568334	12568333	12568332	12568331	32568334	32568333
Fits over	**RT 1 – Open Hub – Double Hung**						
7236	–	12568334	12568333	12568332	12568331	32568334	32568333

RT 1: – Casement and Double Hung – LoĒ³ 366®

NOTE: Replacement stops must be ordered when replacing Integrity Round Top glass

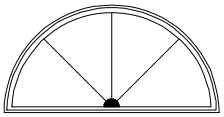

RT 1 – Solid Hub

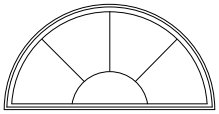

RT 1 – Open Hub

	LoĒ³ 366®						
	One Lite	SW GBG	PB GBG	BZ GBG	EG GBG	CS GBG	EB GBG
Fits over	**RT 1 – Solid Hub – Casement**						
29–1W	2697204	2697234	2625113	2625112	2625111	2925114	2925113
21–2W	2697206	2697236	2637173	2637172	2637171	2937174	2937173
25–2W	2697208	2697238	2645213	2645212	2645211	2945214	2945213
29–2W	2697210	2697240	2653253	2653252	2653251	2953254	2953253
25–3W	2697212	2697242	2669333	2669332	2669331	2969334	2969333
Fits over	**RT 1 – Solid Hub – Double Hung**						
30–1W	2697214	2697244	2627133	2627132	2627131	2927134	2927133
34–1W	2697216	2697246	2631153	2631152	2631151	2931154	2931153
38–1W	2697218	2697248	2635173	2635172	2635171	2935174	2935173
34–2W	2697220	2697250	2665313	2665312	2665311	2965314	2965313
36–2W	2697322	2697259	2668333	2668332	2668331	2968334	2968333
Fits over	**RT 1 – Solid Hub – Sliding Patio Door**						
7236	2697322	2697259	2668333	2668332	2668331	2968334	2968333
Fits over	**RT 1 – Open Hub – Casement**						
29–1W CA	–	2525114	2525113	2525112	2525111	2825114	2825113
21–2W CA	–	2537174	2537173	2537172	2537171	2837174	2837173
25–2W CA	–	2545214	2545213	2545212	2545211	2845214	2845213
29–2W CA	–	2553254	2553253	2553252	2553251	2853254	2853253
57–1W CA	–	2563254	2563253	2563252	2563251	2863254	2863253
25–3W CA	–	2569334	2569333	2569332	2569331	2869334	2869333
Fits over	**RT 1 – Open Hub – Double Hung**						
30–1W TDH	–	2527134	2527133	2527132	2527131	2827134	2827133
34–1W TDH	–	2531154	2531153	2531152	2531151	2831154	2831153
38–1W TDH	–	2535174	2535173	2535172	2535171	2835174	2835173
34–2W TDH	–	2565314	2565313	2565312	2565311	2865314	2865313
36–2W	–	2568334	2568333	2568332	2568331	2868334	2868333
Fits over	**RT 1 – Open Hub – Double Hung**						
7236	–	2568334	2568333	2568332	2568331	2868334	2868333

RT 1: – Casement and Double Hung – LoĒ 180™

NOTE: Replacement stops must be ordered when replacing Integrity Round Top glass

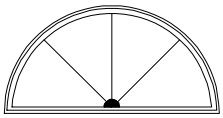

RT 1 – Solid Hub

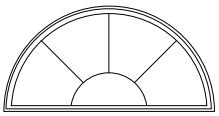

RT 1 – Open Hub

	LoĒ 180®						
	One Lite	SW GBG	PB GBG	BZ GBG	EG GBG	CS GBG	EB GBG
Fits over	**RT 1 – Solid Hub – Casement**						
29–1W	19697204	19697234	19625113	19625112	19625111	39625114	38625114
21–2W	19697206	19697236	19637173	19637172	19637171	39637174	38637174
25–2W	19697208	19697238	19645213	19645212	19645211	39645214	38645214
29–2W	19697210	19697240	19653253	19653252	19653251	39653254	38653254
25–3W	19697212	19697242	19669333	19669332	19669331	39669334	38669334
Fits over	**RT 1 – Solid Hub – Double Hung**						
30–1W	19697214	19697244	19627132	19627132	19627131	39627134	38627134
34–1W	19697216	19697246	19631153	19631152	19631151	39631154	38631154
38–1W	19697218	19697248	19635173	19635172	19635171	39635174	38635174
34–2W	19697220	19697250	19665313	19665312	19665311	39665314	38665314
36–2W	19697322	19697259	19668333	19668332	19668331	39668334	38668334
Fits over	**RT 1 – Solid Hub – Sliding Patio Door**						
7236	19697322	19697259	19668333	19668332	19668331	39668334	38668334
Fits over	**RT 1 – Open Hub – Casement**						
29–1W CA	–	19525114	19525113	19525112	19525111	39525114	38525114
21–2W CA	–	19537174	19537173	19537172	19537171	39537174	38537174
25–2W CA	–	19545214	19545213	19545212	19545211	39545214	38545214
29–2W CA	–	19553254	19553253	19553252	19553251	39553254	38553254
57–1W CA	–	19563254	19563253	19563252	19563251	39563254	38563254
25–3W CA	–	19569334	19569333	19569332	19569331	39569334	38569334
Fits over	**RT 1 – Open Hub – Double Hung**						
30–1W TDH	–	19527134	19527133	19527132	19527131	39527134	38527134
34–1W TDH	–	19531154	19531153	19531152	19531151	39531154	38531154
38–1W TDH	–	19535174	19535173	19535172	19535171	39535174	38535174
34–2W TDH	–	19565314	19565313	19565312	19565311	39565314	38565314
36–2W	–	19568334	19568333	19568332	19568331	39568334	38568334
Fits over	**RT 1 – Open Hub – Double Hung**						
7236	–	19568334	19568333	19568332	19568331	39568334	38568334

RT 7, RT 8, and RT 29: – Casement / Awning and Door – LoĒ² 272®

NOTE: Replacement stops must be ordered when replacing Integrity Round Top glass

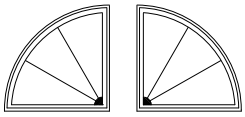

RT 7 RT 8
Solid Hub

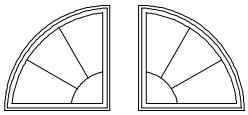

RT 7 RT 8
Open Hub

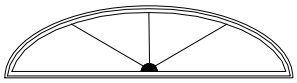

RT 29 – Solid Hub

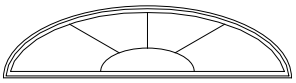

RT 29 – Open Hub

Fits over	LoĒ² 272®						
	One Lite	SW GBG	PB GBG	BZ GBG	EG GBG	CS GBG	EB GBG
29–1W	RT 7 – Solid Hub – Casement / Awning						
	12697202	12697232	12695273	12625272	12625271	32625274	32625273
	RT 8 – Solid Hub – Casement / Awning						
	12697200	12697230	12625263	12625262	12625261	32625264	32625263
	RT 7 – Open Hub – Casement / Awning						
	–	12525274	12525273	12525272	12525271	32525274	32525273
	RT 8 – Open Hub – Casement / Awning						
	–	12525264	12525263	12525262	12525261	32525274	32525263
7318	RT 29 – Solid Hub – Casement / Awning						
	12697318	12697257	12667333	12669152	12669151	32669154	32669153
	RT 29 – Open Hub – Casement / Awning						
	–	12569154	12569153	12569152	12569151	32569154	32569153
7218	RT 29 – Solid Hub – Door						
	12697320	12697257	12668333	12668332	12668331	12665334	32668153
	RT 29 – Open Hub – Door						
	–	12568154	12568153	12568152	12568151	32568154	32568153

RT 7, RT 8, and RT 29: – Casement / Awning and Door – LoĒ³ 366®

NOTE: Replacement stops must be ordered when replacing Integrity Round Top glass

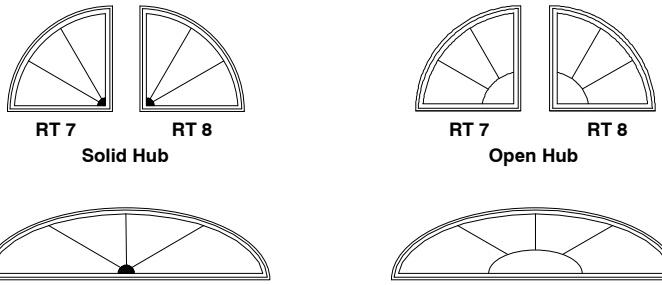

Fits over	LoĒ³ 366®						
	One Lite	SW GBG	PB GBG	BZ GBG	EG GBG	CS GBG	EB GBG
29–1W	RT 7 – Solid Hub – Casement / Awning						
	2697202	2697232	2625273	2625272	2625271	2925274	2925273
	RT 8 – Solid Hub – Casement / Awning						
	2697200	2697230	2625263	2625262	2625261	2925264	2925263
	RT 7 – Open Hub – Casement / Awning						
	–	2525274	2525273	2525272	2525271	2825274	2825273
	RT 8 – Open Hub – Casement / Awning						
	–	2525264	2525263	2525262	2525261	2825264	2825263
7318	RT 29 – Solid Hub – Casement / Awning						
	2697318	2697252	2669153	2669152	2669151	269154	2969153
	RT 29 – Open Hub – Casement / Awning						
	–	2569154	2569153	2569152	2569151	2869154	2869153
7218	RT 29 – Solid Hub – Door						
	2697322	26697257	2668153	2668152	2668151	2968154	2968153
	RT 29 – Open Hub – Door						
	–	2568154	2568153	2568152	2568151	2868154	2868153

RT 7, RT 8, and RT 29: – Casement / Awning and Door – LoĒ 180™

NOTE: Replacement stops must be ordered when replacing Integrity Round Top glass

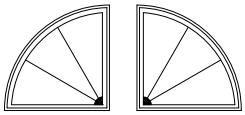

RT 7 RT 8
Solid Hub

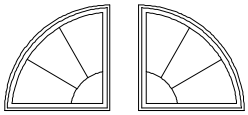

RT 7 RT 8
Open Hub

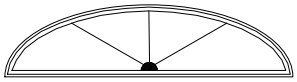

RT 29 – Solid Hub

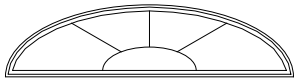

RT 29 – Open Hub

Fits over	LoĒ 180®						
	One Lite	SW GBG	PB GBG	BZ GBG	EG GBG	CS GBG	EB GBG
29–1W	RT 7 – Solid Hub – Casement / Awning						
	19697202	19697232	19695273	19625272	19625271	39625274	38625274
	RT 8 – Solid Hub – Casement / Awning						
	19697200	19697230	19625263	19625262	19625261	39625264	38625264
	RT 7 – Open Hub – Casement / Awning						
	–	19525274	19525273	19525272	19525271	39525274	38525274
	RT 8 – Open Hub – Casement / Awning						
	–	19525264	19525263	19525262	19525261	39525264	38525264
7318	RT 29 – Solid Hub – Casement / Awning						
	19697318	19697257	19667333	19669152	19669151	39669154	38669154
	RT 29 – Open Hub – Casement / Awning						
	–	19569154	19569153	19569152	19569151	39569154	38569154
7218	RT 29 – Solid Hub – Door						
	19697320	19697257	19668333	19668332	19668331	39668154	38668154
	RT 29 – Open Hub – Door						
	–	19568154	19568153	19568152	19568151	39568154	38568154

ORDERING POLYGON REPLACEMENT GLASS

When ordering replacement glass specify:

1. Order #
2. Shape (see shapes below);
3. Rough opening* (polygon shapes only);
4. Glazing.

NOTE: Stops (W4160) are included when ordering replacement glass for Integrity Polygon/Direct Glaze.

* If rough opening is not available, provide the exterior daylight opening by measuring at key dimensions shown in the shape chart below and contact your Integrity representative to calculate rough opening.

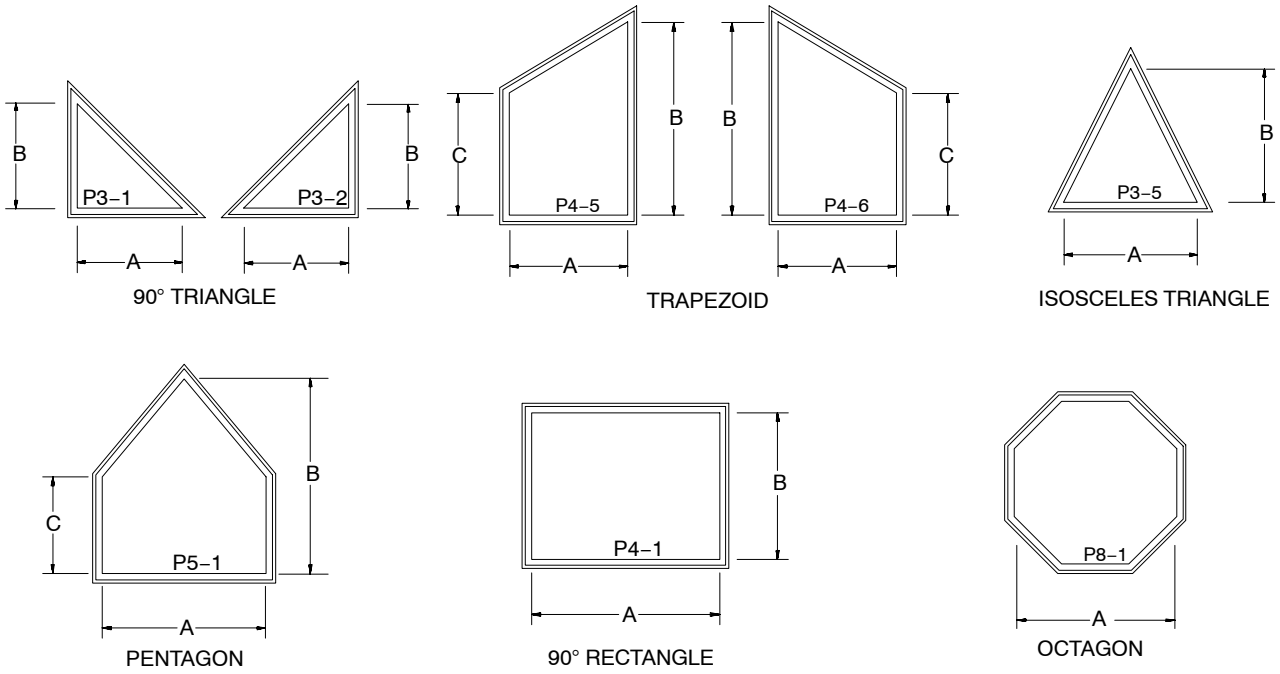

NOTE: Exterior view shown

Polygon/Direct Glaze – LoĒ² 272®

CONVERSION FOR RECTANGLE UNITS ONLY

Determine the rough opening of the existing direct glaze rectangle polygon/transom by measuring the daylight opening. The daylight opening is a measurement of the visible glass.

Daylight opening width + 5 3/8″ (137) = Rough Opening width of the unit
Daylight opening height + 4 7/8″ (124) = Rough Opening height of the unit

NOTE: Daylight opening measurement is from the interior.

NOTE: Stops (W4160) are included when ordering replacement glass for Integrity Polygon/Direct Glaze.

LoĒ² 272	One Lite and GBG									
Call Number	Daylight Opening Width	Daylight Opening Height	One–Lite	Impact	SW GBG	PB GBG	BZ GBG	EG GBG	CS GBG	EB GBG
ICADG										
7316–6W1H	67 5/8″ (1718)	11 3/8″ (289)	13369120	33369125	13312694	13312693	13312692	13312691	33312694	33312693
7316 Prairie–3W2H	67 5/8″ (1718)	11 3/8″ (289)			23312694	23312693	23312692	23312691	43312694	43312693
7316 Tempered Obscure	67 5/8″ (1718)	11 3/8″ (289)	13369135		–	–	–	–	–	–
ISPDDG										
7216–6W1H	66 5/8″ (1692)	11 3/8″	13368120		13338124	13338123	13338122	13338121	33338124	33338123
7216–4W1H	66 5/8″ (1692)	11 3/8″	13368120		13348124	13348123	13348122	13348121	33348124	43338123
7216 Prairie	66 5/8″ (1692)	11 3/8″			23338124	23338123	23338122	23338121	43338124	33348123
10716–9W1H OXO RH or XOO	102 3/8″ (2600)	11 3/8″	13303120		13303124	13303123	13303122	13303121	33303124	33303123
10716–6W1H OXO RH or XOO	102 3/8″ (2600)	11 3/8″	13303120		13363124	13363123	13363122	13363121	33363124	33363123
10716–9W1H OXO LH or OOX	102 1/8″ (2594)	11 3/8″	13303120		13303134	13303133	13303132	13303131	33303134	33303133
10716–6W1H OXO LH or OOX	102 1/8″ (2594)	11 3/8″	13303120		13323134	13323133	13323132	13323131	33323134	33323133
ISFDDG										
7216–6W1H	66 5/8″	11 3/8″	13368120		13368124	13368123	13368122	13368121	33368124	33368123
7216–4W1H	66 5/8″	11 3/8″	13368120		13358124	13358123	13358122	13358121	33358124	43368123
7216 Prairie–3W2H	66 5/8″	11 3/8″			23368124	23368123	23336122	23368121	43368124	33358123
10716–9W1H OXO RH or XOO	102 1/8″	11 3/8″	13313120		13307124	13307123	13307122	13307121	33307124	33307123
10716–6W1H OXO RH or XOO	102 1/8″	11 3/8″	13313120		13367124	13367123	13367122	13367121	33367124	33367123
10716–9W1H OXO LH or OOX	102 1/8″	11 3/8″	13313120		13307134	13307133	13307132	13307131	33307134	33307133
10716–6W1H OXO LH or OOX	102 1/8″	11 3/8″	13313120		13367134	13367133	13367132	13367131	33367134	33367133
IIFDDG										
7216–6W1H	66 5/8″	11 3/8″	13368120	33368125	13368125	13368133	13368132	13368131	33368134	33368133
7216–4W1H	66 5/8″	11 3/8″	13368120		13378124	13378123	13378122	13378121	33378124	43368133
7216 Prairie–3W2H	66 5/8″	11 3/8″			23368125	23368133	23368132	23368131	43368134	33378123
3616–3W1H	31 15/16″ (811)	11 3/8″	13333130	33333135	13333134	13333133	13333132	13333131	13333134	33333133
3616–2W1H	31 15/16″ (811)	11 3/8″			13363134	13363133	13363132	13363131	33363134	43333133
3616 Prairie–3W2H	31 15/16″ (811)	11 3/8″			23333134	23333133	23333132	23333131	43333134	33363133
10816 3060–9W1H	102 15/16″ (2621)	11 3/8″	13303130		13304124	13304123	13304122	13304121	33304124	33304123
10816 3060–6W1H	102 15/16″ (2621)	11 3/8″	13364124		13364124	13364123	13364122	13364121	33364124	33364123
10816 6030–9W1H	102 15/16″	11 3/8″	13303130		13304134	13304133	13304132	13314131	33304134	33304133
10816 6030–6W1H	102 15/16″	11 3/8″	13303130		13324134	13324133	13324132	13324131	33324134	33324133
EVENLY SPACED										
IIFDDG 10816–9W1H	102 15/16″	11 3/8″			13314134	13314133	13314132	13314131	33314134	33314133
IIFDDG 10816–6W1H	102 15/16″	11 3/8″			13364134	13364133	13364132	13364131	33364134	33364133
ISFDDG and ISPDDG 10716–9W1H	102 1/8″	11 3/8″			13313134	13313133	13313132	13313131	33313134	33313133
ISFDDG and ISPDDG 10716–6W1H	102 1/8″	11 3/8″			13373134	13373133	13373132	13373131	33373134	33373133

Polygon/Direct Glaze – LoĒ² 272®

LoĒ² 272	SDL GLASS WITH SPACER BAR				
Call Number	**Daylight Opening Width**	**Daylight Opening Height**	**Equal Lite Cut**	**Additional Lite Cut**	**Prairie Lite Cut**
ICADG					
7316 ICA 25 –3W	67 5/8″ (1718)	11 3/8″ (289)	12369120 – 6W1H		12468120 – 3W2H
7316 ICA 37 –2W	67 5/8″ (1718)	11 3/8″ (289)	12379120 – 6W1H	12579120 – 4W1H	12433130 – 3W2H
ISPDDG					
7216	66 5/8″ (1692)	11 3/8″	12368120 – 6W1H	12568120 – 4W1H	12478120 – 3W2H
10716 XOO	102 3/8″ (2600)	11 3/8″	12303120 – 9W1H	12503120 – 6W1H	–
10716 OOX	102 3/8″ (2600)	11 3/8″	12313120 – 9W1H	12513120 – 6W1H	–
10716 OXO RH	102 1/8″ (2594)	11 3/8″	12323120 – 9W1H	12523120 – 6W1H	–
10716 OXO LH	102 1/8″ (2594)	11 3/8″	12333120 – 9W1H	12533120 – 6W1H	–
ISFDDG					
7216	66 5/8″	11 3/8″	12378120 – 6W1H	12578120 – 4W1H	12488120 – 3W2H
10716 XOO	102 1/8″	11 3/8″	12343120 – 9W1H	12503120 – 6W1H	–
10716 OOX	102 1/8″	11 3/8″	12353120 – 9W1H	12513120 – 6W1H	–
10716 OXO RH	102 1/8″	11 3/8″	12363120 – 9W1H	12523120 – 6W1H	–
10716 OXO LH	102 1/8″	11 3/8″	12373120 – 9W1H	12533120 – 6W1H	–
IIFDDG					
3616	31 15/16″ (811)	11 3/8″	12313130 – 3W1H	12513130 – 2W1H	12479120 – 3W2H
7216	66 5/8″	11 3/8″	12388120 – 6W1H	12588120 – 4W1H	12469120 – 3W2H
10816 3060	102 15/16″ (2621)	11 3/8″	12303130 – 9W1H	12503130 – 6W1H	–
10816 6030	102 15/16″	11 3/8″	12323130 – 9W1H	12523130 – 6W1H	–
EVENLY SPACED					
ISFDDG 10716	102 1/8″	11 3/8″	12313134 – 9W1H	12513134 – 6W1H	–
IIFDDG 10816	102 15/16″	11 3/8″	12333130 – 9W1H	12533130 – 6W1H	–

Polygon/Direct Glaze – LoĒ³ 366®

NOTE: Stops (W4160) are included when ordering replacement glass for Integrity Polygon/Direct Glaze.

LoĒ³ 366	One Lite and GBG									
Call Number	**Daylight Opening Width**	**Daylight Opening Height**	**One–Lite**	**Impact Glass**	**SW GBG**	**PB GBG**	**BZ GBG**	**EG GBG**	**CS GBG**	**EB GBG**
ICADG										
7316–6W1H	67 5/8″ (1718)	11 3/8″ (289)	3369120	2369125	3312694	3312693	3312692	3312691	3512694	3512693
7316 Prairie Cut–3W2H	67 5/8″ (1718)	11 3/8″ (289)	–	–	3412694	3412693	3412692	3412691	3612694	3612693
7316–4W1H	67 5/8″ (1718)	11 3/8″ (289)	3369120		3348124	3348123	3348122	3348121	3548124	3548123
7316 (Tempered Obscure)	67 5/8″ (1718)	11 3/8″ (289)	3369135	–	–	–	–	–	–	
ISPDDG										
7216–6W1H	66 5/8″ (1692)	11 3/8″	3368120	–	3338124	3338123	3338122	3338121	3538124	3538123
7216 Prairie–3W2H	66 5/8″ (1692)	11 3/8″	–	–	3468124	3468123	3436122	3368121	3668124	3638123
7216 –4W1H	66 5/8″ (1692)	11 3/8″	–	–	3358124	3358123	33358122	3358121	3558124	3558123
10716–9W1H OXO RH or XOO	102 3/8″ (2600)	11 3/8″	3303120	–	3303124	3303123	3303122	3303121	3503124	3503123
10716–6W1H OXO RH or XOO	102 3/8″ (2600)	11 3/8″	3303120	–	3363124	3363123	3363122	3363121	3563124	3563123
10716–9W1H OXO LH or OOX	102 1/8″ (2594)	11 3/8″	3303120	–	3303134	3303133	3303132	3303131	3503134	3503133
10716–6W1H OXO LH or OOX	102 1/8″ (2594)	11 3/8″	3303120	–	3323134	3323133	3323132	3323131	3523134	3523133
ISFDDG										
7216–6W1H	66 5/8″	11 3/8″	3368120	–	3368124	3368123	3368122	3468121	3568124	3568123
7216 Prairie	66 5/8″	11 3/8″	–	–	3468124	3468123	3436122	3468121	3668124	3668123
10716–9W1H OXO RH or XOO	102 1/8″	11 3/8″	3303120	–	3307124	3307123	3307122	3307121	3507124	3507123
10716–6W1H OXO RH or XOO	102 1/8″	11 3/8″	3303120	–	3367124	3367123	3367122	3367121	3567124	3567123
10716–6W1H OXO LH or OOX	102 1/8″	11 3/8″	3303120	–	3307134	3307133	3307132	3307131	3507134	3507133
10716–6W1H OXO LH or OOX	102 1/8″	11 3/8″	3303120	–	3367134	3367133	3367132	3367131	3567134	3567133
IIFDDG / IOFDG										
7216–6W1H	66 5/8″	11 3/8″	3368120	2368125	3368125	3368133	3368132	3368131	3568134	3568133
7216 Prairie–3W2H	66 5/8″	11 3/8″	–	–	3468125	3468133	3468132	3468131	3668134	3668133
7216–4W1H	66 5/8″	11 3/8″	3368120		3378124	3378123	3378122	3378121	3578124	3578123
3616–3W1H	31 15/16″ (811)	11 3/8″	3333130	2333135	3333134	3333133	3333132	3333131	3533134	3533133
3616 Prairie–3W2H	31 15/16″ (811)	11 3/8″		–	3433134	3433133	3433132	3433131	3633134	3633133
3616–2W1H	31 15/16″ (811)	11 3/8″		–	3363134	3363133	3363132	3363131	3563134	3563133
10816– 3060–9W1H	102 15/16″ (2621)	11 3/8″	3303130	–	3304124	3304123	3304122	3304121	3504124	3504123
10816– 3060–6W1H	102 15/16″ (2621)	11 3/8″	3303130	–	3364124	3364123	3364122	3364121	3564124	3564123
10816–6030–9W1H	102 15/16″	11 3/8″	3303130	–	3304134	3304133	3304132	3304131	3504134	3504133
10816–6030–6W1H	102 15/16″	11 3/8″	3303130	–	3324134	3324133	3324132	3324131	3524134	3524133
EVENLY SPACED										
ISFDDG–9W1H ISPDDG 10716	102 1/8″	11 3/8″	–	–	3313134	3313133	3313132	3313131	3513134	3513133
ISFDDG–6W1H ISPDDG 10716	102 1/8″	11 3/8″	–	–	3373134	3373133	3373132	3373131	3573134	3573133
IIFDDG–9W1H IOFDDG 10816	102 1/8″	11 3/8″	–	–	3314134	3314133	3314132	3314131	3514134	3514133
IIFDDG–6W1H IOFDDG 10816	102 1/8″	11 3/8″	–	–	3364134	3364133	3364132	3364131	3564134	3564133

Polygon/Direct Glaze – LoĒ³ 366®

LoĒ³ 366	SDL GLASS WITH SPACER BAR				
Call Number	**Daylight Opening Width**	**Daylight Opening Height**	**Equal Lite Cut**	**Additional Lite Cut**	**Prairie Lite Cut**
ICADG					
7316 ICA 25 –3W	67 5/8″ (1718)	11 3/8″ (289)	2369120 – 6W1H	2369120 – 6W1H	2468120 – 3W2H
7316 ICA 37 –2W	67 5/8″ (1718)	11 3/8″ (289)	2379120 – 6W1H	2579120 – 4W1H	2433130 – 3W2H
ISPDDG					
7216	66 5/8″ (1692)	11 3/8″	2368120 – 6W1H	2568120 – 4W1H	2478120 – 3W2H
10716 XOO	102 3/8″ (2600)	11 3/8″	2303120 – 9W1H	2503120 – 6W1H	–
10716 OOX	102 3/8″ (2600)	11 3/8″	2313120 – 9W1H	2513120 – 6W1H	–
10716 OXO RH	102 1/8″ (2594)	11 3/8″	2323120 – 9W1H	2523120 – 6W1H	–
10716 OXO LH	102 1/8″ (2594)	11 3/8″	2333120 – 9W1H	2533120 – 6W1H	–
ISFDDG					
7216	66 5/8″	11 3/8″	2378120 – 6W1H	2578120 – 4W1H	2488120 – 3W2H
10716 XOO	102 1/8″	11 3/8″	2343120 – 9W1H	2543120 – 6W1H	–
10716 OOX	102 1/8″	11 3/8″	2353120 – 9W1H	2553120 – 6W1H	–
10716 OXO RH	102 1/8″	11 3/8″	2363120 – 9W1H	2563120 – 6W1H	–
10716 OXO LH	102 1/8″	11 3/8″	2373120 – 9W1H	2573120 – 6W1H	–
IIFDDG					
3616	31 15/16″ (811)	11 3/8″	2313130 – 3W1H	2513130 – 2W1H	2479120 – 3W2H
7216	66 5/8″	11 3/8″	2388120 – 6W1H	2588120 – 4W1H	2469120 – 3W2H
10816 3060	102 15/16″ (2621)	11 3/8″	2303130 – 9W1H	2503130 – 6W1H	–
10816 6030	102 15/16″	11 3/8″	2323130 – 9W1H	2523130 – 6W1H	–
EVENLY SPACED					
ISFDDG 10716	102 1/8″	11 3/8″	2313134 – 9W1H	2513134 – 6W1H	–
IIFDDG 10816	102 15/16″	11 3/8″	2333130 – 9W1H	2533130 – 6W1H	–

Polygon/Direct Glaze – LoĒ 180™

NOTE: Stops (W4160) are included when ordering replacement glass for Integrity Polygon/Direct Glaze.

LoĒ 180	One Lite and GBG									
Call Number	Daylight Opening Width	Daylight Opening Height	One–Lite	Tempered	SW GBG	PB GBG	BZ GBG	EG GBG	CS GBG	EB GBG
ICADG										
7316–6W1H	67 5/8″ (1718)	11 3/8″ (289)	19369120	19369125	19312694	19312693	19312692	19312691	39312694	38312694
7316 Prairie–3W2H	67 5/8″ (1718)	11 3/8″ (289)			29312694	29312693	29312692	29312691	49312694	48312694
ISPDDG										
7216–6W1H	66 5/8″ (1692)	11 3/8″	19368120		19338124	19338123	19338122	19338121	39338124	38338124
7216 Prairie–3W2H	66 5/8″ (1692)	11 3/8″			29338124	29338123	29338122	29338121	49338124	38348124
7216–4W1H	66 5/8″ (1692)	11 3/8″			19348124	19348123	19348122	19348121	39348124	48338124
10716–9W1H OXO RH or XOO	102 3/8″ (2600)	11 3/8″	19303120		19303124	19303123	19303122	19303121	39303124	38303124
10716–6W1H OXO RH or XOO	102 3/8″ (2600)	11 3/8″	19303120		19363124	19363123	19363122	19363121	39363124	38363124
10716–9W1H OXO LH or OOX	102 1/8″ (2594)	11 3/8″	19303120		19303134	19303133	19303132	19303131	39303134	38303134
10716–6W1H OXO LH or OOX	102 1/8″ (2594)	11 3/8″	19303120		1933134	19323133	19323132	19323131	39323134	38323134
ISFDDG										
7216–6W1H	66 5/8″	11 3/8″	19368120		19368124	19368123	19368122	19368121	39368124	38368124
7216 Prairie–3W2H	66 5/8″	11 3/8″			29368124	29368123	29336122	29368121	49368124	38358124
7216–4W1H	66 5/8″	11 3/8″	19368120		19358124	19358123	19358122	19358121	39358124	48368124
10716–9W1H OXO RH or XOO	102 1/8″	11 3/8″	19313120		19307124	19307123	19307122	19307121	39307124	38307124
10716–6W1H OXO RH or XOO	102 1/8″	11 3/8″	19313120		19367124	19367123	19367122	19367121	39367124	38367124
10716–9W1H OXO LH or OOX	102 1/8″	11 3/8″	19313120		19307134	19307133	19307132	19307131	39307134	38307134
10716–6W1H OXO LH or OOX	102 1/8″	11 3/8″	19313120		19367134	19367133	19367132	19367131	39367134	38367134
IIFDDG										
7216–6W1H	66 5/8″	11 3/8″	19368120		19368125	19368133	19368132	19368131	39368134	38368134
7216 Prairie–3W2H	66 5/8″	11 3/8″			29368125	29368133	29368132	29368131	49368134	38378124
7216–4W1H	66 5/8″	11 3/8″	19368120		19378125	19378133	19378132	19378131	39378134	48368134
3616–30–3W1H	31 15/16″ (811)	11 3/8″	19333130		19333134	19333133	19333132	19333131	19333134	38333134
3616 Prairie–3W2H	31 15/16″ (811)	11 3/8″			29333134	29333133	29333132	29333131	49333134	38363134
3616–30–2W1H	31 15/16″ (811)	11 3/8″	19333130		19363134	19363133	19363132	19363131	39363134	48333134
10816 3060–9W1H	102 15/16″ (2621)	11 3/8″	19303130		19304124	19304123	19304122	19304121	39304124	38304124
10816 3060–6W1H	102 15/16″ (2621)	11 3/8″	19303130		19364124	19364123	19364122	19364121	39364124	38364124
10816 6030–9W1H	102 15/16″	11 3/8″	19303130		19304134	19304133	19304132	19314131	39304134	38304134
10816 6030–6W1H	102 15/16″	11 3/8″	19303130		19324134	19324133	19324132	19324131	39324134	38324134
EVENLY SPACED										
IIFDDG 10816–9W1H	102 15/16″	11 3/8″			19314134	19314133	19314132	19314131	39314134	38314134
IIFDDG 10816–6W1H	102 15/16″	11 3/8″			19364134	19364133	19364132	19364131	39364134	38364134
ISFDDG / ISPDDG 10716–9W1H	102 1/8″	11 3/8″			19313134	19313133	19313132	19313131	39313134	38313134
ISFDDG / ISPDDG 10716–6W1H	102 1/8″	11 3/8″			19373134	19373133	19373132	19373131	39373134	38373134

Polygon/Direct Glaze – LoĒ 180™

LoĒ 180	SDL GLASS WITH SPACER BAR				
Call Number	**Daylight Opening Width**	**Daylight Opening Height**	**Equal Lite Cut**	**Additional Lite Cut**	**Prairie Lite Cut**
ICADG					
7316 ICA 25 –3W	67 5/8″ (1718)	11 3/8″ (289)	19369130 – 6W1H		19468120 – 3W2H
7316 ICA 37 –2W	67 5/8″ (1718)	11 3/8″ (289)	19379120 – 6W1H	19579120 – 4W1H	19433130 – 3W2H
ISPDDG					
7216	66 5/8″ (1692)	11 3/8″	19368130– 6W1H	19568120 – 4W1H	19478120 – 3W2H
10716 XOO	102 3/8″ (2600)	11 3/8″	19304120 – 9W1H	19503120 – 6W1H	–
10716 OOX	102 3/8″ (2600)	11 3/8″	19313120 – 9W1H	19513120 – 6W1H	–
10716 OXO RH	102 1/8″ (2594)	11 3/8″	19323120 – 9W1H	19523120 – 6W1H	–
10716 OXO LH	102 1/8″ (2594)	11 3/8″	19333120 – 9W1H	19533120 – 6W1H	–
ISFDDG					
7216	66 5/8″	11 3/8″	19378120 – 6W1H	19578120 – 4W1H	19488120 – 3W2H
10716 XOO	102 1/8″	11 3/8″	19343120 – 9W1H	19543120 – 6W1H	–
10716 OOX	102 1/8″	11 3/8″	19353120 – 9W1H	19553120 – 6W1H	–
10716 OXO RH	102 1/8″	11 3/8″	19363120 – 9W1H	19563120 – 6W1H	–
10716 OXO LH	102 1/8″	11 3/8″	19373120 – 9W1H	19573120 – 6W1H	–
IIFDDG					
3616	31 15/16″ (811)	11 3/8″	19313130 – 3W1H	19513130 – 2W1H	19479120 – 3W2H
7216	66 5/8″	11 3/8″	19388120 – 6W1H	19588120 – 4W1H	19469120 – 3W2H
10816 3060	102 15/16″ (2621)	11 3/8″	19304130 – 9W1H	19503130 – 6W1H	–
10816 6030	102 15/16″	11 3/8″	19323130 – 9W1H	19523130 – 6W1H	–
EVENLY SPACED					
ISFDDG 10716	102 1/8″	11 3/8″	19330210 – 9W1H	19513134 – 6W1H	–
IIFDDG 10816	102 15/16″	11 3/8″	19340210 – 9W1H	19533130 – 6W1H	–

WOOD PARTS

ILLUSTRATION *NOT TO SCALE*	DESCRIPTION	CALL NUMBER	BARE WOOD PART NO.	WHITE INTERIOR PART NO.
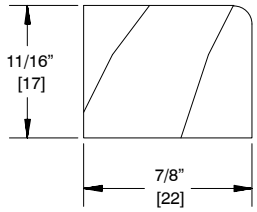	**Replacement Stops – Patio Door/Swinging Door** W4160			
	Complete	CN IRTDR 7336	37901253	39201253
	Elliptical stop only	CN IRTDR 7318	31507318	39207318
	Sill stop only	CN IRTDR 7318	31501755	39201755

NOTE: Stops (W4160) are still available for current size replacements.

GLASS

When ordering replacement glass specify:

1. Description;
2. Part number;
3. Quantity.

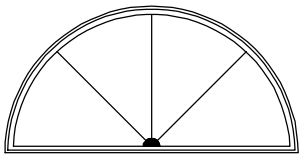

Patio Door/Swinging Door – True Half (RT1)

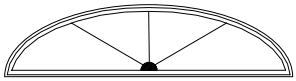

Patio Door/Swinging Door – Elliptical (RT29)

Call Number	Shape	One–Lite Part Number	Stone White GBG Part Number
IRT 7336 DR	RT1	12697212	12697242
IRT 7318 DR	RT29	12697318	12697252

SERVICE – REGLAZING ROUND TOP DIRECT GLAZE

Tools needed: Safety glasses
Protective gloves
Stiff bladed putty knife
Glazing (flexible) putty knife
Side cutter,
Hammer
Nail set

Parts needed: Replacement glass
Replacement glazing bead (W4160)
Two sided adhesive glazing tape (if reusing wood glazing bead)
Silicone bump–on
Glass setting blocks
Dow 1199 silicone sealant or equivalent neutral curing silicone
1 1/4″ 16 gauge brad nails

NOTE: It is recommended that new glazing bead be ordered when reglazing Integrity Round Tops. Replacement stops require some minor cutting for proper fit. Existing stops can be reused if no damage occurs during removal.

NOTE: True half circles shapes shown in illustrations, procedures are identical for elliptical shapes.

CAUTION: Always use extreme care when reglazing or handling broken glass. Use proper eye and hand protection.

Removing Old Glass

1. Slide the flexible glazing knife between the wood bead and the glass. Push knife around the perimeter of the glass to loosen the adhesive glazing tape. See illustration 1.

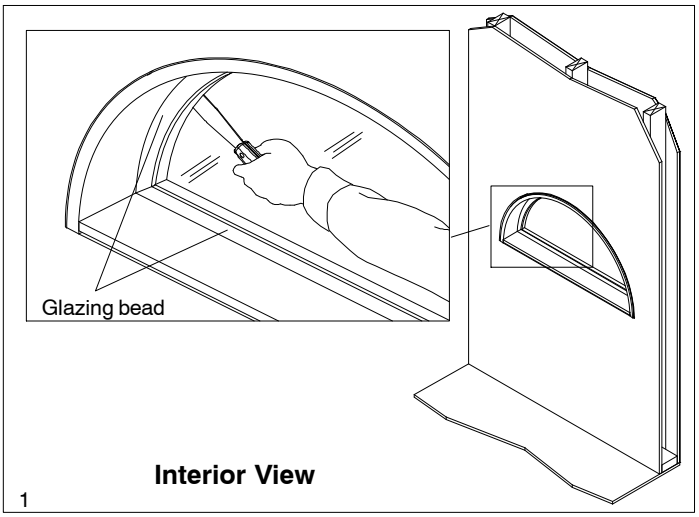

Removing Old Glass (Continued)

2. Starting at the center of the sill, pry the wood bead up and away from the frame using the stiff putty knife. Be careful not to damage or split wood bead if it is to be reused. See illustration 2.
3. Carefully remove any remaining nails with a side cutter.
4. Using a glazing knife, cut between the exterior Ultrex cladding and glass on all sides. See illustration 3. Start in the middle working toward the corners and pushing away from yourself.
5. Using a stiff putty knife carefully remove glass from the frame by pulling and prying at the same time. Note the location of the glass setting blocks as they can be reused.
6. Once the glass is out, clean any residual silicone from the Ultrex cladding.

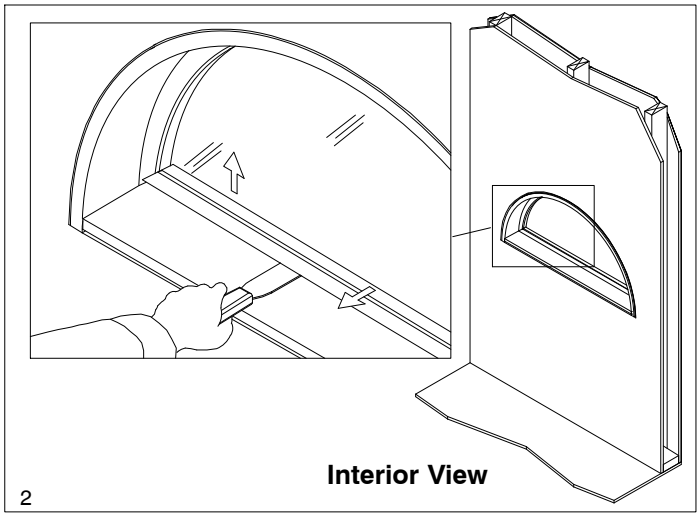

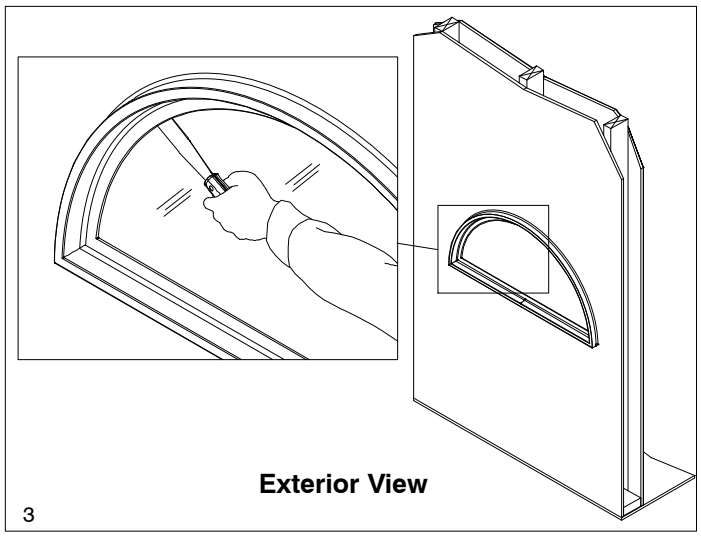

Installing New Glass

NOTE: Before proceeding it may be necessary to dry fit replacement wood bead to ensure proper fit. Some trimming or adjustment may be necessary.

1. Remove any glazing tape or adhesive residue remaining on glazing bead (if it is to be reused). Apply glazing tape to the flat surface at the edge of the glazing bead as shown in illustration 4.
2. Apply silicone bump–on on the exterior surface of the new glass centered over the spacer, 4″ (102) from each corner and 10–12″ (254–305) on center around the perimeter. See illustration 5.
3. Place glass setting blocks in frame against Ultrex cladding at quarter points from the corners on the sill. See illustration 6.

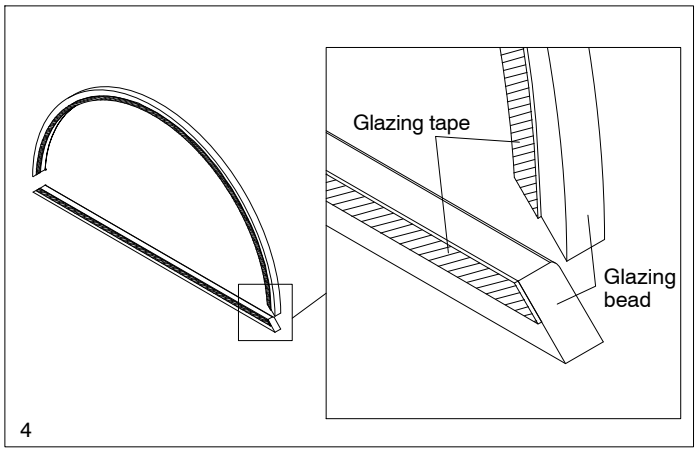

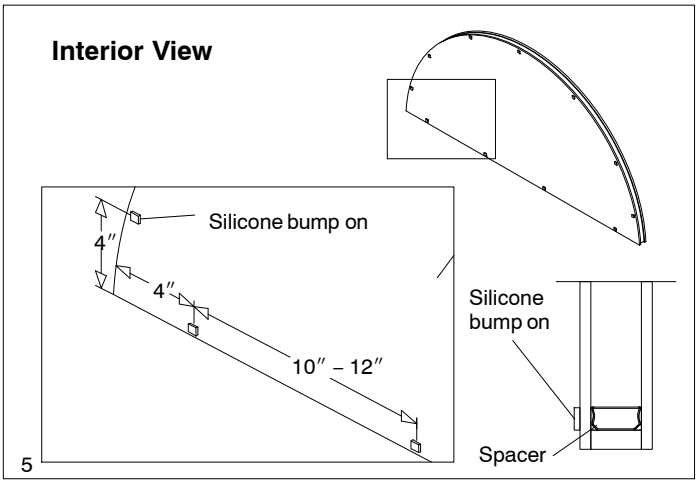

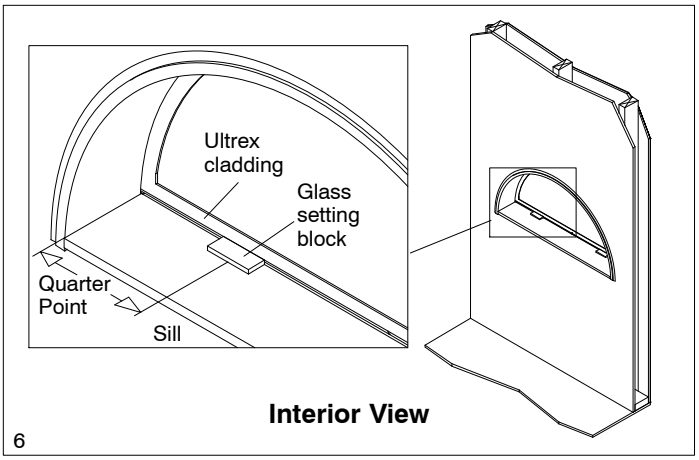

Installing New Glass (Continued)

4. With a caulking gun, run a 3/16″ – 1/4″ (5–6) continuous bead of silicone 9/16″ (14) from the wood frame on the interior side of the Ultrex cladding. See illustration 7.

CAUTION: Always wear proper hand protection when handling and replacing glass.

5. Install glass in frame, bottom first, then tip into place. Press glass into the silicone to ensure proper squeeze out.

6. Beginning with the radius wood bead remove the backing from the glazing tape and carefully press into place. Repeat the same procedure for the sill bead.

7. When all wood bead is in place press down firmly and nail to the frame 1/4″ from the interior side of the wood bead at intervals of 6″ – 8″ (152–203) using the 1 1/4″ 16 gauge brad nails. See illustration 8. Countersink nails with nail set.

NOTE: Do not clean excess sealant from the glass or Ultrex until fully cured. Once cured, cut away excess squeeze out with a utility knife.

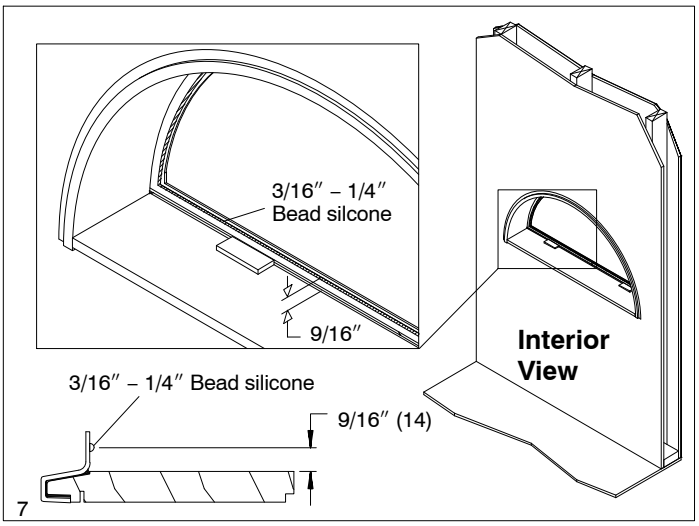

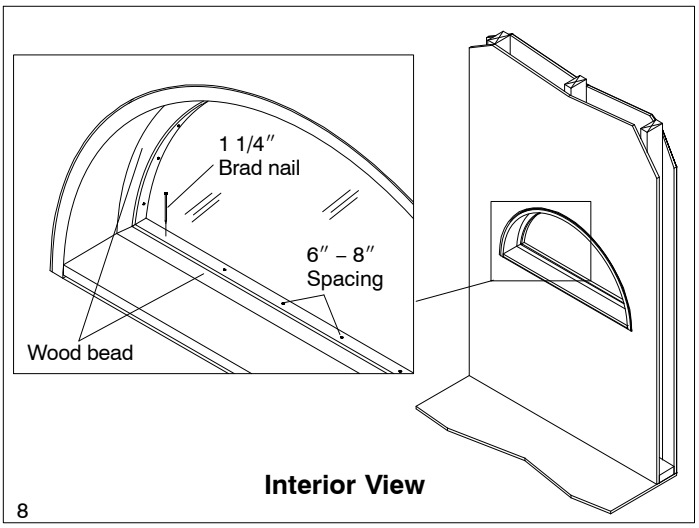

SERVICE – REGLAZING POLYGON DIRECT GLAZE

Tools needed: Safety glasses
Glass handling gloves
Stiff bladed putty knife
Glazing (flexible) putty knife
Side cutter
Hammer
Nail set

Parts needed: Replacement glass
Replacement glazing bead (W4160)
Two sided adhesive glazing tape(if reusing wood glazing bead)
Dow 1199 silicone sealant or equivalent neutral curing silicone
Glass setting blocks
1 1/4″ 16 gauge brad nails

NOTE: It is recommended that new glazing bead be ordered when reglazing Integrity Polygons. Replacement stops require some minor cutting for proper fit. Existing stops can be reused if no damage occurs during removal.

NOTE: Rectangular shapes shown in illustration, procedures are identical regardless of shape.

CAUTION: Always use extreme care when reglazing or handling broken glass. Use proper eye and hand protection.

Removing old glass

1. Slide the flexible glazing knife between the wood bead and the glass. Push knife around the perimeter of the glass to loosen the adhesive tape glazing. See illustration 9.

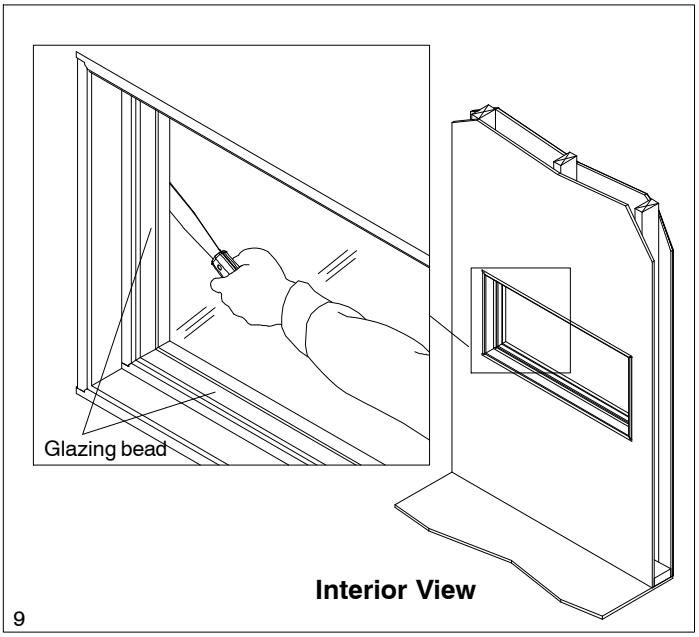

REGLAZING POLYGON DIRECT GLAZE UNIT

Removing Old Glass (Continued)

2. Starting at the center of the sill, pry the wood bead up and away from the frame using the stiff putty knife. Be careful not to damage or split wood bead if it is to be reused. See illustration 10.
3. Carefully remove any remaining nails with the side cutter or nail puller.
4. Using the glazing knife, cut between the exterior Ultrex cladding and glass on all sides. See illustration 11. Start in the middle working toward the corners and pushing away from yourself.
5. Using a stiff putty knife carefully remove glass from the frame by pulling and prying at the same time.
6. Once the glass is out, clean any residual silicone from the Ultrex cladding.

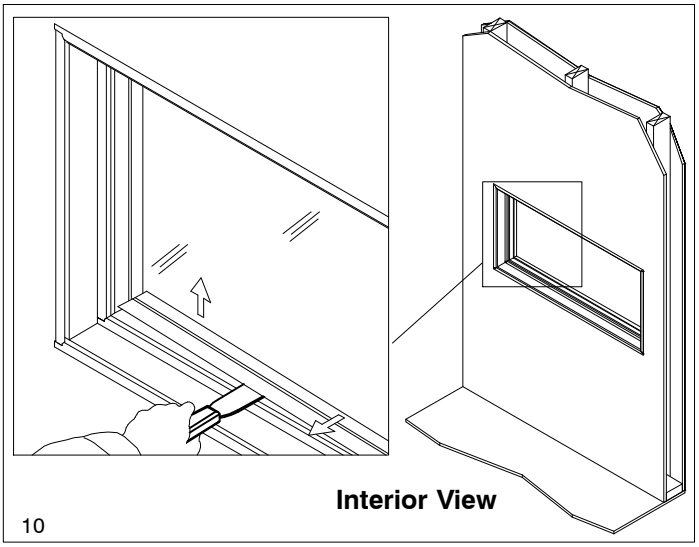

10

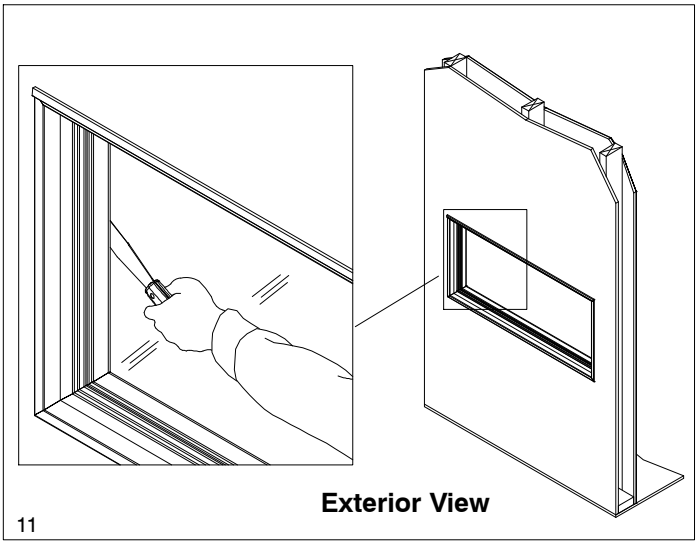

11

Installing New Glass

NOTE: Before proceeding it may be necessary to dry fit replacement wood bead to ensure proper fit. Some trimming or adjustment may be necessary.

1. Remove any glazing tape or adhesive residue remaining on glazing bead (if it is to be reused). Apply glazing tape to the flat surface at the edge of the glazing bead as shown in illustration 12.
2. Place glass setting blocks in frame against Ultrex cladding at quarter points from the corners on the sill. See illustration 13.
3. With a caulking gun, run a 3/16″ – 1/4″ (5–6) continuous bead of silicone 3/16″ (5) from the edge of the Ultrex cladding. See illustration 14.

CAUTION: Always wear proper hand protection when handling and replacing glass.

4. Install glass in frame, bottom first, then tip into place. Press glass into the silicone to ensure proper squeeze out.

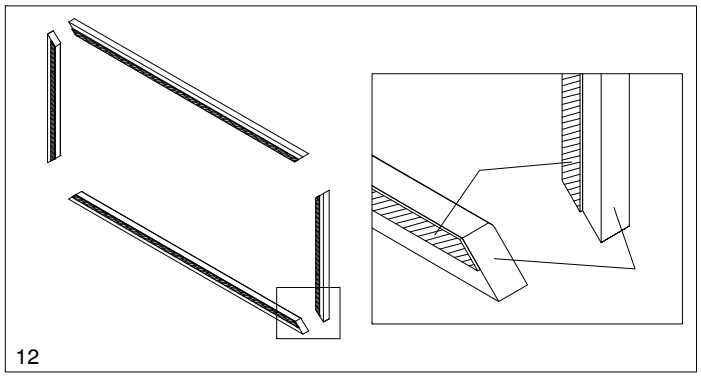
12

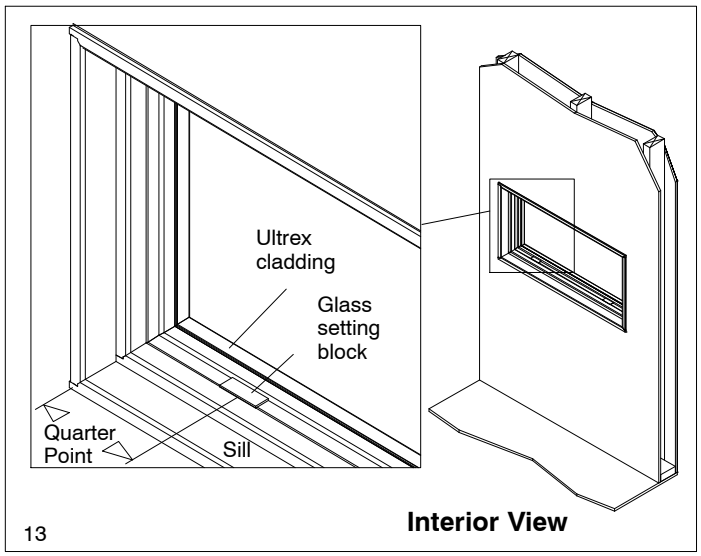

13

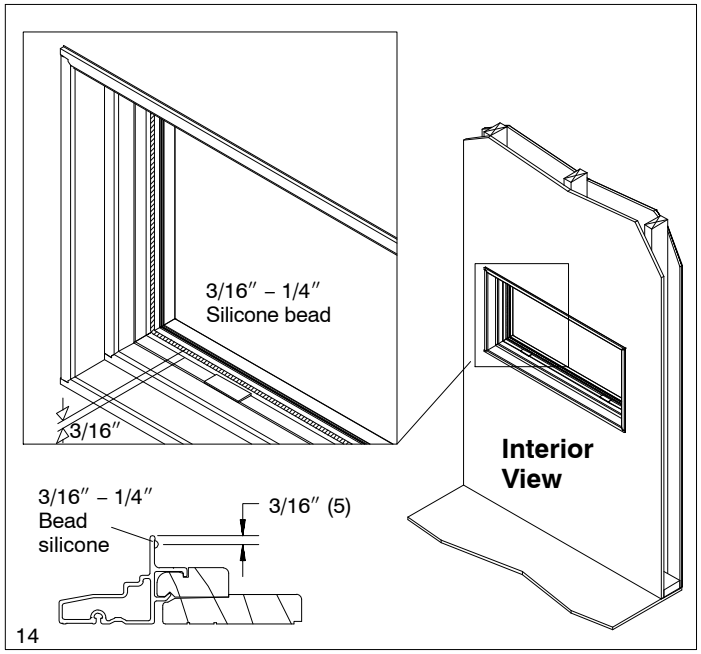

14

Installing New Glass (Continued)

5. Beginning with the two shortest pieces, remove the backing from the glazing tape and carefully press the wood bead into place. Repeat the same procedure for the other sides.

6. When all wood bead is in place press down firmly and nail to the frame 1/4″ from the interior side of the wood bead at intervals of 6″ – 8″ (152–203) using the 1 1/4 16 gauge brad nails. See illustration 15. Countersink nails with nail set.

NOTE: Do not clean excess sealant from the glass or Ultrex until fully cured. Once cured cut away excess squeeze out with a utility knife.

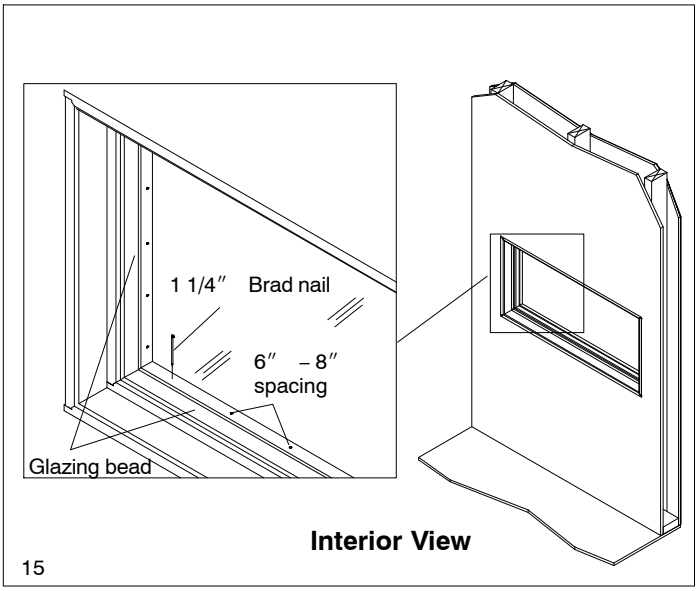

SERVICE – JAMB EXTENSION INSTALLATION MULLED UNITS

Tools needed: Safety glasses
Hammer
#2 Phillips screwdriver or cordless screwdriver
Drill
Wood workers glue

Parts needed: Jamb extension
Jamb extension bracket
8– #7 x 5/8″ wood screws
1/8″ x 1 1/8″ 18 gauge staples or 4d finish

1. Attach radius jamb extension to the head jamb with 1/8″x1 1/8″ 18 gauge staples or 4d finishing nails spaced 3–5″ (76–127) apart.
2. Using a #2 Phillips or cordless screwdriver, attach the jamb extension bracket to the radius jamb extension on each side with two #7 x 5/8″ wood screws. Apply a bead of woodworkers glue to the butt ends of the radius and lineal jamb extension. See illustration 17.
3. Join the radius and lineal jamb extension and adjust as necessary making sure the two jamb extensions are aligned at the butt joint. Screw the jamb extension bracket to the lineal jamb extension with two #7x5/8″ wood screws.
4. Nail the lineal jamb extension to the jamb with 1/8″x1 1/8″ 18 gauge staples or 4d finishing nails spaced 3–5″ (76–127) apart.
5. Follow installation instructions for installing unit into rough opening or masonry opening.

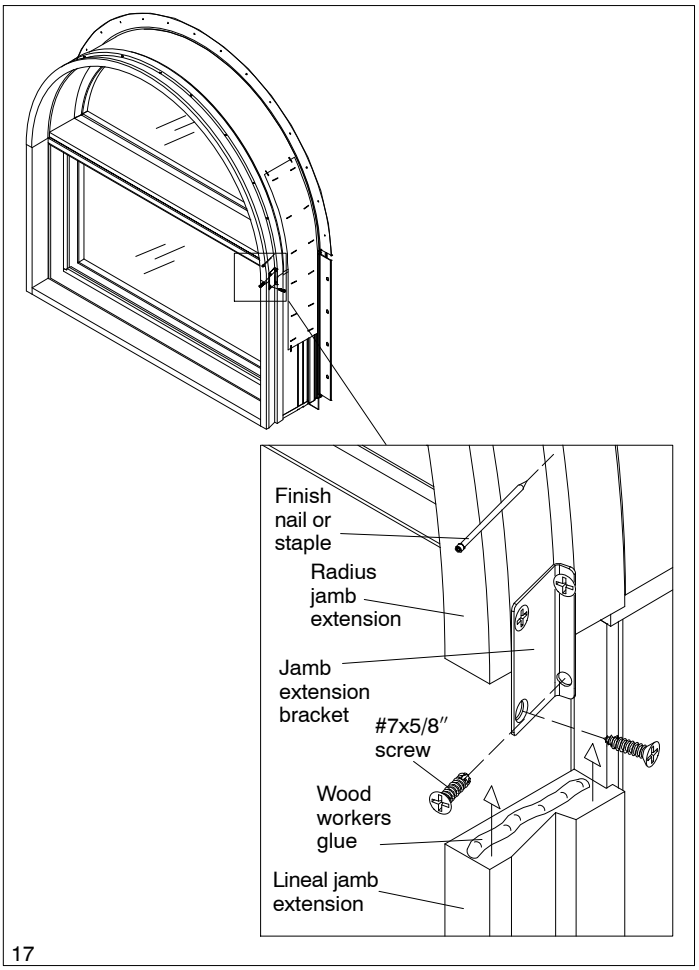

17

SERVICE – JAMB EXTENSION INSTALLATION

Tools needed: Safety glasses
Hammer
Drill

Parts needed: Jamb extension
1/8″ x 1 1/8″ 18 gauge staples or 4d finish nails
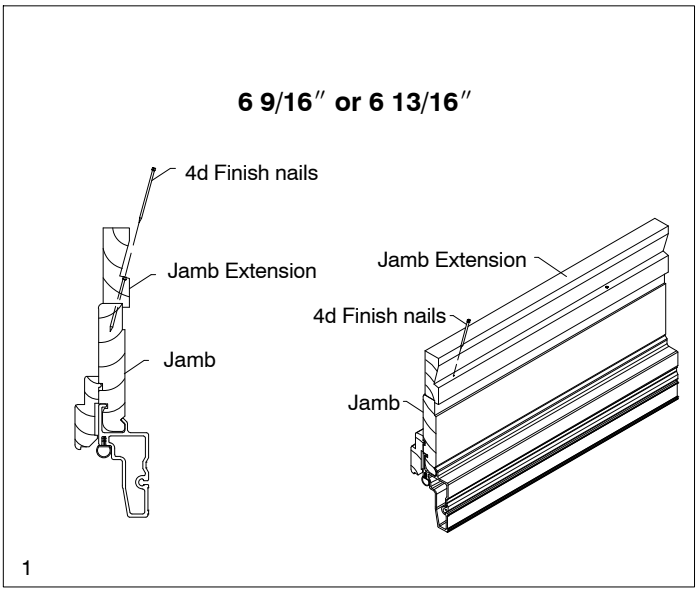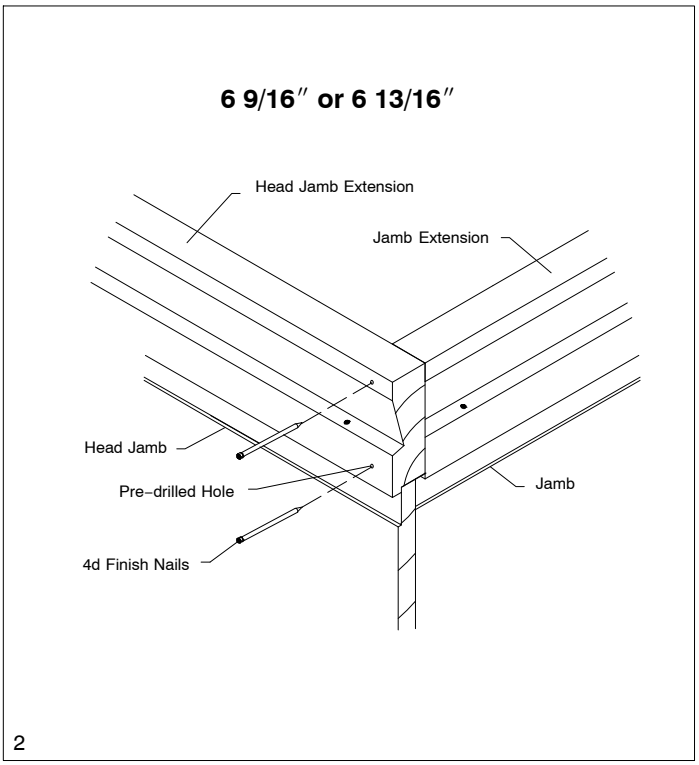
1. Fasten jamb extension to head jamb, radiused head jamb, sill or side jambs using 1/8″ x 1 1/8″ 18 gauge staples or 4d finish nails spaced every 3–5″ (76–127). Careful application of staples or nails is required to prevent damage to jamb extension and/or window unit. See illustration 1.
2. Fasten corners of extensions using 1/8″ x 1 1/8″ 18 gauge staples or 4d finish nails. See illustration 2.
3. Follow installation instructions for installing unit into rough opening or masonry opening.