CHAPTER 7

MARVIN ROUND TOPS MADE FOR INTEGRITY®

Table of Contents

	PAGE
History	7.2
Part Identification – Casement	7.3
Part Identification – Double Hung	7.4
Parts	
Miscellaneous	7.5
Wood Parts	7.6
Round Top Grilles and Fastener	7.9
Glass/Grilles/Interior Trim Sizing Charts	7.10
Glass Replacement Shapes	7.12
RT 1 and RT 2 – Casement and Double Hung One Lite	7.14
RT 1 – Casement and Double Hung GBG – LoĒ^2 272®	7.15
RT 1 – Casement and Double Hung GBG – LoĒ^3 366®	7.16
RT 1 – Casement and Double Hung GBG – LoĒ 180™	7.17
RT 6 – Casement and Awning One Lite	7.18
RT 6 – Casement Casement GBG – LoĒ^2 272®	7.19
RT 6 – Casement Casement GBG – LoĒ^3 366®	7.20
RT 6 – Casement Casement GBG – LoĒ 180™	7.21
RT 6 – Double Hung and Door One Lite	7.22
RT 6 – Double Hung and Door GBG – LoĒ^2 272®	7.23
RT 6 – Double Hung and Door GBG – LoĒ^3 366®	7.24
RT 6 – Double Hung and Door GBG – LoĒ 180™	7.25
RT 7 and RT 8 – Casement and Double Hung One Lite and GBG	7.26
RT 27 and RT 28 – One Lite and GBG	7.27
Obsolete Parts	
3/1/04 Door Resizing – Wood	7.28
3/1/04 Door Resizing – Glass	7.29
Service	
Reglazing	7.30
Field Applied Jamb Extension	7.34
Field Applied Jamb Extension – Mulled Units	7.35

ATTENTION:

- Specification and technical data are subject to change without notice.
- Numbers listed in parentheses ( ) are metric equivalents in millimeters rounded to the nearest whole number.

PRODUCED	UNIT TYPE	FEATURES OR CHANGES	DISCONTINUED
March 2002	Marvin Round Top made for Integrity	Unit features direct glazed 3/4″" or 1″" Low E II glass with Argon, 4 9/16″" jambs with W1366 interior trim; extruded aluminum clad exterior in stone white or pebble gray. Added sizes and shapes include eyebrow above springline, true half above springline, quarter circle, and true half. Available options include 6 9/16″" or 6 13/16″" jambs factory applied; white interior pre–finish; grilles and GBGs (except for true half above springline shapes).	Present
March 2004	Marvin Round Top made for Integrity	Pebble exterior / White interior GBGs available 3/1/04. Standard 6–0 door width changed from 73″ to 72″ opening. 7259, 7225, 7233, and 7269 sizes replacing 7359, 7325, 7333, and 7369.	Present
July 2006	Marvin Round Top made for Integrity	SDL offered on all Wood/Ultrex Series windows and doors. 7/8″ wide bars with Ultrex exterior and wood interior. See Product Bulletin 66 for more details.	Present
September 2006	Marvin Round Top made for Integrity	Prairie SDL and GBG Lite cuts made available for the Wood/Ultrex Series windows and doors. See Product Bulletin 70 for more details.	Present
March 2007	Marvin Round Top made for Integrity	Bronze exteriors introduced.	Present
November 2007	Marvin Round Top made for Integrity	Evergreen exteriors introduced.	Present
March 2008	Marvin Round Top made for Integrity	Cashmere exteriors introduced March 17, 2008.	Present
January 2009	Marvin Round Top made for Integrity	Added additional Round Top sizes, see bulletin #109. Added GBG open hub option.	Present
May 2009	Marvin Round Top made for Integrity	LoĒ^3 366® glass option introduced.	Present
June 2010	Marvin Round Top made for Integrity	Introduced the SDL with Spacer Bar option on LoĒ^3 366®	Present
April 2011	Marvin Round Top made for Integrity	LoĒ 180™ glass option introduced.	Present
April 2012	Marvin Round Top made for Integrity	LoĒ^2 272® glass option introduced.	Present
August 2012	Marvin Round Top made for Integrity	August 27, 2012: Ebony exteriors for Wood–Ultrex introduced.	Present

MARVIN ROUND TOP MADE FOR INTEGRITY® CASEMENT

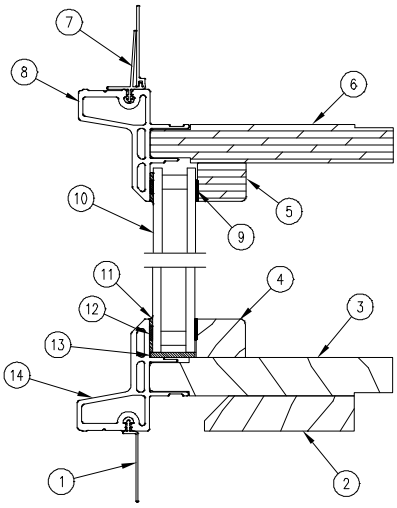

HEAD JAMB & SILL DETAIL

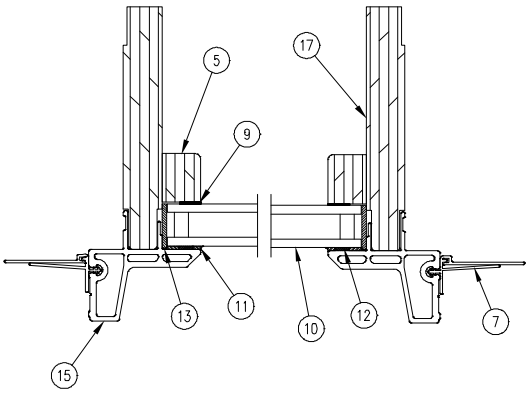

RT1 & RT2

JAMB DETAIL

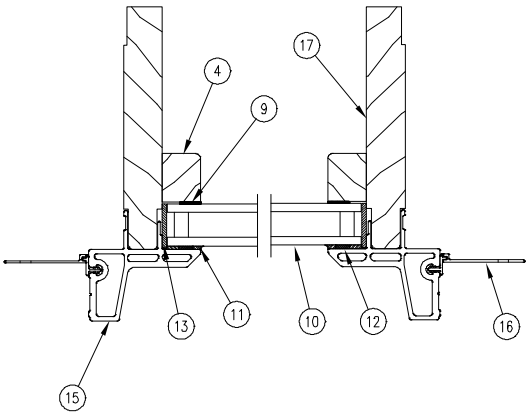

RT6

NOTE: Not to scale; specifications subject to change without notice.

1. Sill Nailing Fin
2. Sill Standing Block
3. Sill
4. Glazing Bead
5. Glazing Bead (Radiused)
6. Head Jamb
7. Radius Nailing Fin
8. Head Jamb Cladding
9. Glazing Tape
10. Insulated Glass
11. Silicone Sealant
12. Silicone Bump–On
13. Glass Setting Block
14. Sill Cladding
15. Jamb Cladding
16. Jamb Nailing Fin
17. Jamb

MARVIN ROUND TOP MADE FOR INTEGRITY®
DOUBLE HUNG

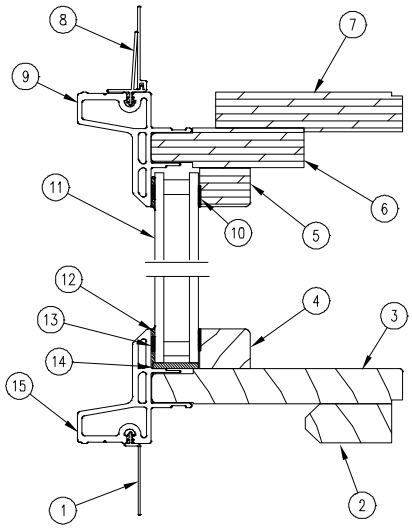

HEAD JAMB
& SILL DETAIL

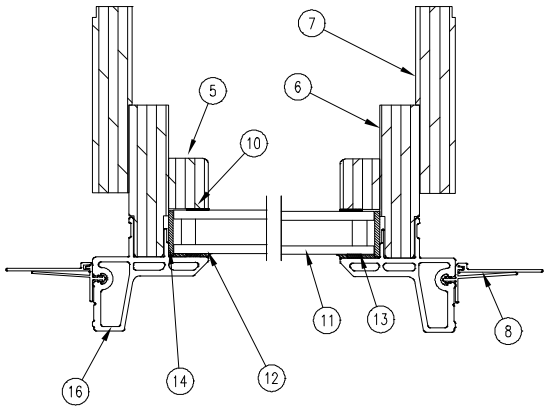

RT1
&
RT2

JAMB
DETAIL

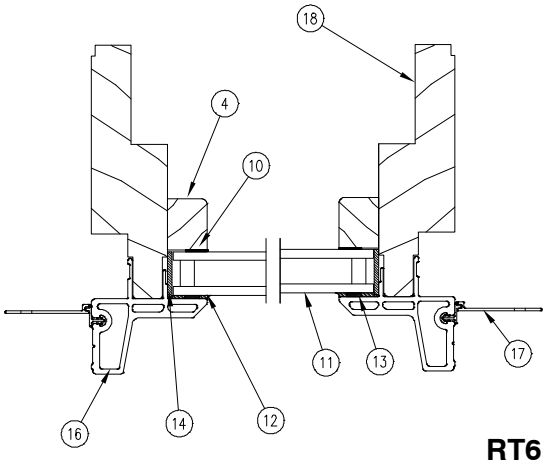

RT6

NOTE: Not to scale; specifications subject to change without notice.

1. Sill Nailing Fin
2. Sill Standing Block
3. Sill
4. Glazing Bead
5. Glazing Bead (Radiused)
6. Primary Bent Frame
7. Secondary Bent Frame
8. Radius Nailing Fin
9. Head Jamb Cladding
10. Glazing Tape
11. Insulated Glass
12. Silicone Sealant
13. Silicone Bump–On
14. Glass Setting Block
15. Sill Cladding
16. Jamb Cladding
17. Jamb Nailing Fin
18. Jamb

When ordering replacement parts specify:

1. Description;
2. Length;
3. Part number.

ILLUSTRATION *NOT TO SCALE*	DESCRIPTION	LENGTH	PART NUMBER
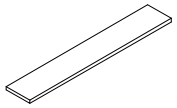	**Glazing Tape** *NOTE: 2–sided adhesive foam tape* 3/32″ x 5/8″	96″ (2438) 150′ (45.7 meters)	11406227 11406212
	Silicone Bump–On		10500208

When ordering replacement wood parts specify:

1. Profile number;
2. Description;
3. Part number;
4. Bare wood or white interior.

ILLUSTRATION *NOT TO SCALE*	DESCRIPTION	CALL NUMBER	BARE WOOD	WHITE INTERIOR
	IRTM CA W4160 – Complete set			
	RT1	33–1W	31508131	39208131
	RT1	37–1W	31508132	39208132
	RT1	33–2W	31508164	39208164
	RT1	37–2W	31508165	39208165
	RT2	37W	31508133	39208133
	RT2	49W	31508134	39208134
	RT2	73W	31508135	39208135
	RT6	21W / 25W / 29W	31508166	39208166
	RT6	33W / 37W	31508167	39208167
	RT6	41W	31508168	39208168
	RT6	49W / 57W	31508136	39208136
Replacement Stops	RT6	65W / 73W	31508137	39208137
	RT7 & RT8	IQCIRM – 25	31508129	39208129
11/16″ (17) 7/8″ (22)	**IRTM DH** W4160 – Complete set			
	RT1	36–1W	31508138	39208138
	RT1	42–1W	31508139	39208139
	RT1	26–2W	31508172	39208172
	RT1	30–2W	31508173	39208173
	RT1	38–2W	31508140	39208140
	RT1	42–2W	31508174	39208174
	RT2	68W	31508141	39208141
	RT2	72W	31508144	39208144
	RT6	26W / 30W	31508175	39208175
	RT6	34W / 36W	31508176	39208176
	RT6	38W / 42W	31508177	39208177
	RT6	52W / 60W	31508178	39208178
	RT6	68W / 72W	31508137	39208137
	RT6	76W / 84W	31508179	39208179
	RT 7 & RT 8	IQCIRM – 30	31508169	39208169
	RT 7 & RT 8	IQCIRM – 34	31508170	39208170
	RT 7 & RT 8	IQCIRM – 36	31508171	39208171

* Specific sizes/shapes need to be ordered by part number through the Marvin ordering system.

ILLUSTRATION *NOT TO SCALE*	DESCRIPTION	CALL NUMBER	BARE WOOD	WHITE INTERIOR
Replacement Stops 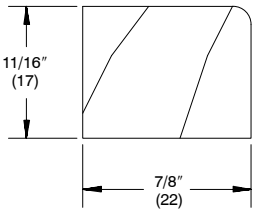	**IRTM DR** W4160 – Complete set RT2 RT6	 72W 72W	 31508144 31508137	 39208144 39208137
	ICIRM W4160 – Complete set RT27	 3636	 31508180	 39208180
	IELPM W4160 – Complete set RT28	 3248	 31508181	 39208181
	Lineal W4160 – Complete set 120″ (3048)	 Lineal	 32181298	 39201798

* Specific sizes/shapes need to be ordered by part number through the Marvin ordering system.

ILLUSTRATION *NOT TO SCALE*	DESCRIPTION	CALL NUMBER	BARE WOOD	WHITE INTERIOR
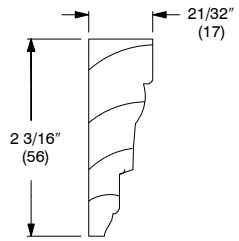	**Interior Trim** W1366 Lineal	96 1/4″ (2445) 120″ (3048)	31760796 31760999	39230796 39230999
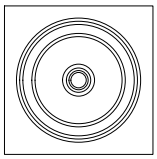	**Plinth Block** *NOTE: Pine* Each Box of 50		11850093 10499100	39299100

ROUND TOP GRILLES AND FASTENER

ILLUSTRATION *NOT TO SCALE*	DESCRIPTION	PART NUMBER
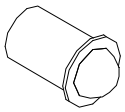	**Bullet Catch (Grille Fastener)**	02062398

When ordering replacement grilles, specify:

1. Description;
2. Quantity;
3. Bare wood or white interior.
4. Grille fasteners on separate order if needed.

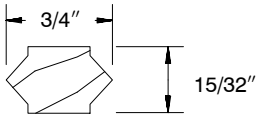

W7340

Grille End Profile

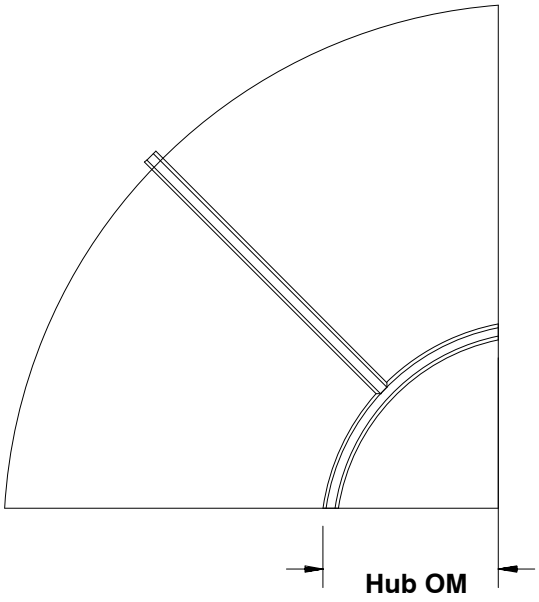

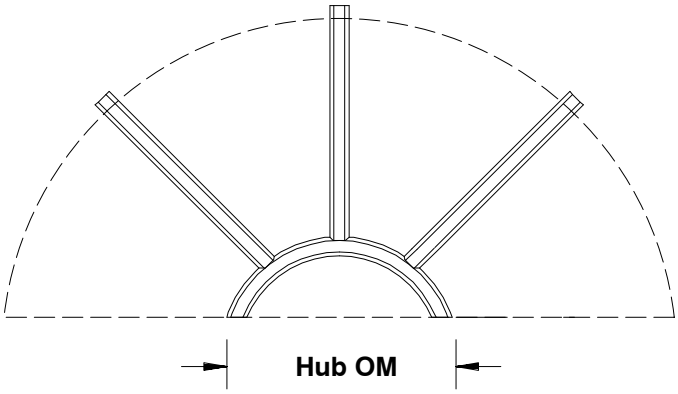

When ordering replacement grilles, specify:

1. Description;
2. Quantity;
3. Bare wood or white interior.

GLASS, GRILLE AND INTERIOR TRIM INFORMATION – CASEMENT / AWNING

CN	SHAPE	DLO WIDTH	DLO HEIGHT	GRILLE HUB OM	GLASS OM WIDTH	GLASS OM HEIGHT
IQCIRM 25–1W CA	RT7 or RT 8	19 15/16″	19 15/16″	10 7/32″	21 1/32″	21 1/32″
IRTM 33–1W CA	RT 1	27 23/32″	12″	8 13/16″	28 15/16″	13 1/8″
IRTM 33–2W CA	RT 1	59 7/8″	28″	8 13/16″	61 1/64″	29 7/64″
IRTM 37–1W CA	RT 1	31 3/4″	14″	10 1/4″	32 15/16″	15 1/8″
IRTM 37–2W CA	RT 1	67 7/8″	32″	10 1/4″	69 1/32″	33 7/64″
IRTM 3765 CA	RT 2	32″	61 1/8″	10 31/32″	33 5/64″	62 1/4″
IRTM 3777 CA	RT 2	32″	73 1/8″	10 31/32″	33 5/64″	74 1/4″
IRTM 4971 CA	RT 2	44″	67 1/8″	24 3/4″	45 5/64″	68 1/4″
IRTM 4983 CA	RT 2	44″	79 1/8″	24 3/4″	45 5/64″	80 1/4″
IRTM 7359 CA	RT 2	68″	55 1/8″	24 3/4″	69 5/64″	56 1/4″
IRTM 2118 CA	RT 6	16″	13 15/16″	N/A	17 5/64″	15 3/64″
IRTM 2519 CA	RT 6	20″	14 31/32″	N/A	21 5/64″	16 5/64″
IRTM 2526 CA/AWN	RT 6	20″	22 11/32″	N/A	21 5/64″	23 29/64″
IRTM 2920 CA	RT 6	24″	16 17/64″	N/A	25 5/64″	17 3/8″
IRTM 2928 CA/AWN	RT 6	24″	23 41/64″	N/A	25 5/64″	24 3/4″
IRTM 3320 CA	RT 6	28″	16 3/8″	N/A	29 5/64″	17 1/2″
IRTM 3328 CA/AWN	RT 6	28″	23 3/4″	N/A	29 5/64″	24 55/64″
IRTM 3722 CA	RT 6	32″	17 3/4″	N/A	33 5/64″	18 55/64″
IRTM 3729 CA/AWN	RT 6	32″	25 1/8″	N/A	33 5/64″	26 15/64″
IRTM 4121 CA	RT 6	36″	17 7/64″	N/A	37 5/64″	18 7/32″
IRTM 4128 CA/AWN	RT 6	36″	24 31/64″	N/A	37 5/64″	25 19/32″
IRTM 4164 CA	RT 6	36″	60 31/64″	N/A	37 5/64″	61 19/32″
IRTM 4921 CA	RT 6	44″	17 3/8″	N/A	45 5/64″	18 1/2″
IRTM 4929 CA/AWN	RT 6	44″	24 3/4″	N/A	45 5/64″	25 27/32″
IRTM 4965 CA	RT 6	44″	60 3/4″	N/A	45 5/64″	61 27/32″
IRTM 5724 CA	RT 6	52″	19 9/16″	N/A	53 5/64″	20 11/16″
IRTM 5731 CA/AWN	RT 6	52″	26 15/16″	N/A	53 5/64″	28 1/16″
IRTM 5767 CA	RT 6	52″	62 15/16″	N/A	53 5/64″	64 1/16″
IRTM 6523 CA	RT 6	60″	19 1/4″	N/A	61 5/64″	20 23/64″
IRTM 6531 CA/AWN	RT 6	60″	26 5/8″	N/A	61 5/64″	27 47/64″
IRTM 6567 CA	RT 6	60″	62 5/8″	N/A	61 5/64″	63 47/64″
IRTM 7325 CA	RT 6	68″	21 13/32″	N/A	69 5/64″	22 1/2″
IRTM 7333 CA/AWN	RT 6	68″	28 25/32″	N/A	69 5/64″	29 7/8″
IRTM 7369 CA	RT 6	68″	64 25/32″	N/A	69 5/64″	65 7/8″

GLASS, GRILLE AND INTERIOR TRIM INFORMATION – DOUBLE HUNG AND DOOR						
CN	SHAPE	DLO WIDTH	DLO HEIGHT	GRILLE HUB OM	GLASS OM WIDTH	GLASS OM HEIGHT
IQCIRM 30–1W DH	RT 7 or RT 8	25 7/16″	25 7/16″	8 15/16″	26 35/64″	26 37/64″
IQCIRM 34–1W DH	RT 7 or RT 8	29 7/16″	29 7/16″	10 19/64″	30 35/64″	30 37/64″
IQCIRM 36–1W DH	RT 7 or RT 8	31 7/16″	31 29/64″	10 31/32″	32 35/64″	32 37/64″
IRTM 36–1W DH	RT 1	31 1/4″	13 3/4″	9 3/4″	32 7/16″	14 7/8″
IRTM 42–1W DH	RT 1	37 9/32″	16 3/4″	18 5/32″	38 15/32″	17 7/8″
IRTM 26–2W DH	RT 1	46 27/32″	21 1/2″	19 11/64″	48″	22 39/64″
IRTM 30–2W DH	RT 1	54 55/64″	25 1/2″	21 7/8″	56 1/64″	26 39/64″
IRTM 38–2W DH	RT 1	70 7/8″	33 1/2″	22 3/16″	72 1/32″	34 19/32″
IRTM 42–2W DH	RT 1	78 29/32″	37 1/2″	23 7/8″	80 1/32″	38 39/64″
IRTM 6869 DH	RT 2	63″	65 1/4″	25 7/64″	64 1/16″	66 3/8″
IRTM 7259 DH	RT 2	67″	65 5/8″	N/A	68 37/64″	55 5/8″
IRTM 2619 DH	RT 6	21 1/2″	15 27/64″	N/A	22 37/64″	16 17/32″
IRTM 3021 DH	RT 6	25 1/2″	16 53/64″	N/A	26 37/64″	17 47/64″
IRTM 3421 DH	RT 6	29 1/2″	16 7/8″	N/A	30 37/64″	17 31/32″
IRTM 3622 DH	RT 6	31 1/2″	17 37/64″	N/A	32 37/64″	18 43/64″
IRTM 3820 DH	RT 6	33 1/2″	16 27/64″	N/A	34 37/64″	17 17/32″
IRTM 4222 DH	RT 6	37 1/2″	17 9/16″	N/A	38 37/64″	18 43/64″
IRTM 5222 DH	RT 6	47″	18 5/32″	N/A	48 5/64″	19 1/4″
IRTM 5266 DH	RT 6	47″	62 5/32″	N/A	48 5/64″	63 1/4″
IRTM 6025 DH	RT 6	55″	20 17/32″	N/A	56 5/64″	21 5/8″
IRTM 6032 DH	RT 6	55″	27 29/32″	N/A	56 5/64″	28 29/32″
IRTM 6069 DH	RT 6	55″	64 17/32″	N/A	56 5/64″	65 5/8″
IRTM 7626 DH	RT 6	71″	22 19/64″	N/A	72 5/64″	23 13/32″
IRTM 7670 DH	RT 6	71″	66 19/64″	N/A	72 5/64″	67 13/32″
IRTM 8429 DH	RT 6	79″	24 59/64″	N/A	80 5/64″	26 1/32″
IRTM 8473 DH	RT 6	79″	68 59/64″	N/A	80 5/64″	70 1/32″
IRTM 6824 DH	RT 6	63″	20 1/64″	N/A	64 1/16″	21 1/8″
IRTM 6868 DH	RT 6	63″	64 1/64″	N/A	64 1/16″	65 1/8″
IRTM 7225 DH/DR	RT 6	67″	21 7/64″	N/A	68 3/32″	22 7/64″
IRTM 7233 DH/DR	RT 6	67″	28 31/64″	N/A	68 3/32″	29 31/64″
IRTM 7259 DH/DR	RT 2	67″	54 5/8″	26 5/32″	68 3/32″	55 5/8″
IRTM 7269 DH/DR	RT 6	67″	64 31/64″	N/A	68 3/32″	65 31/64″
ICIRM 3636	RT 27	31″	31″	N/A	32 5/64″	32 5/64″
IELPM 3248	RT 28	27″	43″	N/A	28 5/64″	44 5/64″

When ordering replacement glass specify:

1. Description;
2. Call number;
3. Glazing;
4. Part number.

IRTM Replacement Glass Shapes

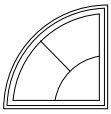

Casement Quarter Circle
(RT7 Shown)

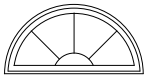

Casement True Half (RT1)
(IRTM 33–1W CA Shown)

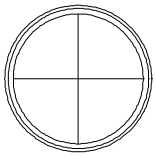

Full Circle (RT27)
(ICIRM 3636 Shown)

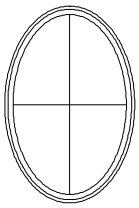

Ellipse Shape (RT28)
(IELPM 3248 Shown)

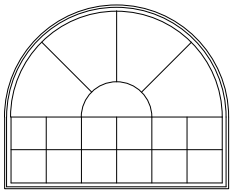

Casement–True Half above Springline(RT2)
(IRTM 7359 CA Shown)

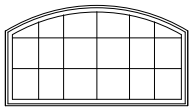

Casement–Eyebrow above Springline (RT6)
(IRTM 5731 CA Shown)

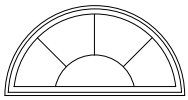

Double Hung True Half (RT1)
(IRTM 42–1W Shown)

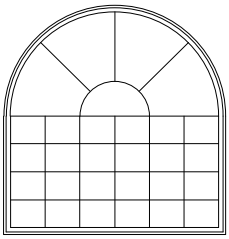

Double Hung–True Half above Springline (RT2)
(IRTM 6869 DH Shown)

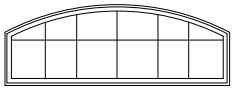

Double Hung–Eyebrow above Springline (RT6)
(IRTM 6824 Shown)

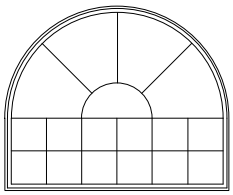

Door–True Half above Springline (RT2)
(IRTM 7359 Shown)

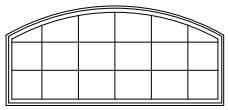

Door–Eyebrow above Springline (RT6)
(IRTM 6824 DH Shown)

Available Divided Lite Patterns

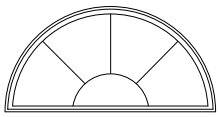

Open Hub, 3 Spokes Sunburst Lite Cut Wood Grilles, GBGs SDL w / Spacer

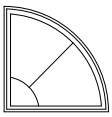

Open Hub, 1 Spoke Sunburst Lite Cut Wood Grilles SDL w / Spacer

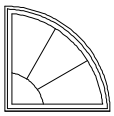

Open Hub 2 Spokes Sunburst Lite Cut GBGs, SDL w / Spacer

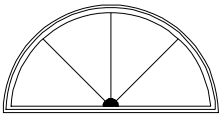

Solid Hub, 3 Spokes Sunburst Lite Cut GBGs

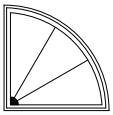

Solid Hub, 2 Spokes Sunburst Lite Cut GBGs

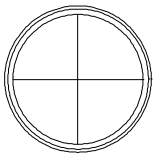

Rectangular Lite Cut 2W2H Wood Grilles, GBGs, SDL w / Spacer

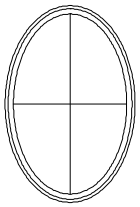

Rectangular Lite Cut Wood Grilles, GBGs SDL w / Spacer

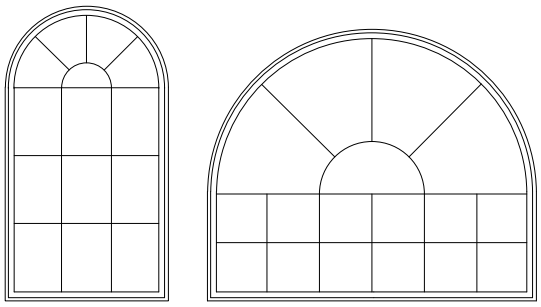

Open Hub, 3 Spokes Sunburst Lite Cut Wood Grilles, SDL w / Spacer

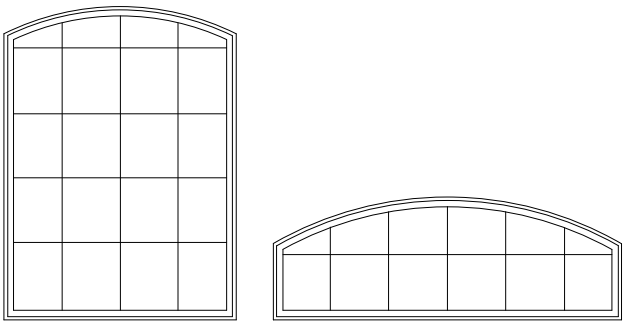

Rectangular Lite Cut Wood Grilles, GBGs, SDL w / Spacer

IRTM – RT 1 and RT 2: 1–Lite – LoĒ² 272® , LoĒ³ 366® and LoĒ 180™

NOTE: Replacement stops must be ordered when replacing Integrity Round Top glass

Shape	Call Number	LoĒ² 272 One–Lite	LoĒ² 272 One–Lite Tempered	LoĒ³ 366 One–Lite	LoĒ³ 366 One–Lite Tempered	LoĒ 180 One–Lite	LoĒ 180 One–Lite Tempered
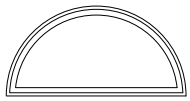	**RT 1 – 1 Lite – Casement**						
	33–1W CA	12698658	N/A	2698658	N/A	19698658	N/A
	33–2W CA	12661290	N/A	2661290	N/A	19661290	N/A
	37–1W CA	12698660	N/A	2698660	N/A	19698660	N/A
	37–2W CA	12669340	N/A	2669340	N/A	19669340	N/A
	RT 1 – 1 Lite – Double Hung						
	26–2W DH	12647220	N/A	2647220	N/A	19647220	N/A
	30–2W DH	12656260	N/A	2656260	N/A	19656260	N/A
	36–1W DH	12698690	N/A	2698690	N/A	19698690	N/A
	38–2W DH	12698694	N/A	2698694	N/A	19698694	N/A
	42–1W DH	12698692	N/A	2698692	N/A	19698692	N/A
	42–2W DH	12680390	N/A	2680390	N/A	19680390	N/A
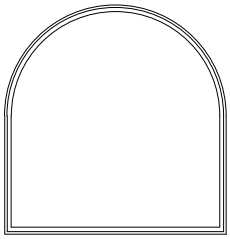	**RT 2 – 1 Lite – Casement**						
	3765 CA	12698680	12733625	2698680	2733625	19698680	19733625
	3777 CA	12698682	12733745	2698682	2733745	19698682	19733745
	4971 CA	12698684	12745685	2698684	2745685	19698684	19745685
	4983 CA	12698686	12745805	2698686	2745805	19698686	19745805
	7359 CA	12698688	12769565	2698688	2769565	19698688	19769565
	RT 2 – 1 Lite – Double Hung						
	6869 DH	12698700	12764665	2698700	2764665	19698700	19764665
	RT 2 – 1 Lite – Double Hung / Door						
	7259 DH/DR	12698706	12768555	2698706	2768555	19698706	19768555

IRTM – RT 1 and RT 2: SDL Spacer Bar LoĒ² 272® and LoĒ 180™

NOTE: Replacement stops must be ordered when replacing Integrity Round Top glass

SDL Spacer Bar Glass

RT1 – Casement, Awning and Picture

Fits over	Annealed LoĒ³ 366 Part Number	Annealed LoĒ² 272 Part Number	Annealed LoĒ 180 Part Number
33 – 1W	2698659	12698659	19698659
37 – 1W	2698661	12698661	19698661
33 – 2W	2691291	12691291	19691291
37 – 2W	2699341	12699341	19699341

RT1 – Double Hung and Picture

Fits over	Annealed LoĒ³ 366 Part Number	Annealed LoĒ² 272 Part Number	Annealed LoĒ 180 Part Number
36 – 1W	2698691	12698691	19698691
42 – 1W	2698693	12698693	19698693
26 – 2W	2687221	12687221	19687221
30 – 2W	2696261	12696261	19696261
38 – 2W	2698695	12698695	19698695
42 – 2W	2690391	12690391	19690391
RT1 – Door			
30 – 2W	2696261	12696261	19696261

RT2 – Casement, Awning and Picture

Call Number	Annealed LoĒ³ 366 Part Number	Annealed LoĒ² 272 Part Number	Annealed LoĒ 180 Part Number	Tempered LoĒ³ 366 Part Number	Tempered LoĒ² 272 Part Number	Tempered LoĒ 180 Part Number
3765	2698681	12698681	19698681	2733626	12733626	19734626
3777	2698683	12698681	19698683	2733746	12733746	19733746
4971	2698685	12698685	19698685	2745686	12745686	19745686
4983	2698687	12698687	19698687	2745806	12745806	19745806
7359	2698689	12698689	19698689	2769566	12769566	19769566

RT2 – Double Hung / Door

Call Number	Annealed LoĒ³ 366 Part Number	Annealed LoĒ² 272 Part Number	Annealed LoĒ 180 Part Number	Tempered LoĒ³ 366 Part Number	Tempered LoĒ² 272 Part Number	Tempered LoĒ 180 Part Number
6869	2698701	12698701	19698701	2764666	12764666	19764666
7259	2698707	12698707	19698707	2768556	12768556	19768556

* SDL spacer bar glass available on Open Hub units only

IRTM – RT 1: – Casement and Double Hung GBG – LoĒ² 272®

NOTE: Replacement stops must be ordered when replacing Integrity Round Top glass

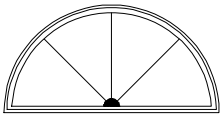

RT 1 – Solid Hub

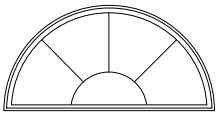

RT 1 – Open Hub

	LoĒ² 272®					
	SW GBG	**PB GBG**	**BZ GBG**	**EG GBG**	**CS GBG**	**EB GBG**
Call Number	**RT 1 – Solid Hub – Casement**					
33–1W CA	12968608	12628133	12628132	12628131	32628134	32628133
33–2W CA	12661294	12661293	12661292	12661291	32661294	32661293
37–1W CA	12698610	12632153	12632152	12632151	32632154	32632153
RTM 37–2W CA	12669344	12669343	12669342	12669341	32669344	32669343
Call Number	**RT 1 – Solid Hub – Double Hung**					
26–2W DH	12647224	12647223	12647333	12647221	32647224	32647223
30–2W DH	12656264	12656263	12656262	12656261	32656264	32656263
36–1W DH	12698640	12632143	12632142	12632141	32632144	32632143
38–2W DH	12698644	12672434	12672342	12672341	32672344	32672343
42–1W DH	12698642	12639173	12638172	12638171	32638174	32638173
42–2W DH	12680394	12680393	12680392	12680391	32680394	32680393
Call Number	**RT 1 – Open Hub – Casement**					
33–1W CA	12528134	12528133	12528132	12528131	32528134	32528133
33–2W CA	12561294	12561293	12561292	12561291	32561294	32561293
37–1W CA	12532154	12532153	12532152	12532151	32532154	32532153
37–2W CA	12569344	12569343	12569342	12569341	32569344	32569343
Call Number	**RT 1 – Open Hub – Double Hung**					
26–2W DH	12547224	12547223	12647333	12647221	32647224	32547223
30–2W DH	12556264	12556223	12656262	12656261	32656264	32556263
36–1W DH	12532144	12532143	12632142	12632141	32632144	32532143
38–2W DH	12572344	12572343	12672342	12672341	32672344	32572343
42–1W DH	12538174	12538173	12638172	12638171	32638174	32538173
42–2W DH	12580394	12580393	12680392	12680391	32680394	32580393

IRTM – RT 1: – Casement and Double Hung GBG – LoĒ³ 366®

NOTE: Replacement stops must be ordered when replacing Integrity Round Top glass

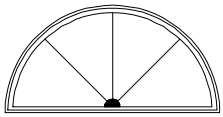

RT 1 – Solid Hub

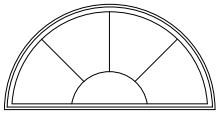

RT 1 – Open Hub

	LoĒ³ 366®					
	SW GBG	**PB GBG**	**BZ GBG**	**EG GBG**	**CS GBG**	**EB GBG**
Call Number	**RT 1 – Solid Hub – Casement**					
33–1W CA	2698608	2628133	2628132	2628131	2928134	2928133
33–2W CA	2661294	2661293	2661292	2661291	2961294	2961293
37–1W CA	2698610	2632153	2632152	2632151	2932154	2932153
RTM 37–2W CA	2669344	2669343	2669342	2669341	2961294	2969343
Call Number	**RT 1 – Solid Hub – Double Hung**					
26–2W DH	2647224	2647223	2647222	2647221	2947224	2947223
30–2W DH	2656264	2656263	2656262	2656261	2956264	2956263
36–1W DH	2698640	2632143	2632142	2632141	2932144	2932143
38–2W DH	2698644	2672343	2672342	2672341	2972344	2972343
42–1W DH	2698642	2638173	2638172	2638171	2938174	2938173
42–2W DH	2680394	2680393	2680392	2680391	2980394	2980393
Call Number	**RT 1 – Open Hub – Casement**					
33–1W CA	2528134	2528133	2528132	2528131	2828134	2828133
33–2W CA	2561294	2561293	2561292	2561291	2861294	2861293
37–1W CA	2532154	2532153	2532152	2532151	2832151	2832153
37–2W CA	2569344	2569343	2569342	2569341	2869344	2869343
Call Number	**RT 1 – Open Hub – Double Hung**					
26–2W DH	2547224	2547223	2547222	2547221	2847224	2847223
30–2W DH	2556264	2556263	2556262	2556261	2856264	2856263
36–1W DH	2532144	2532143	2532142	2532141	2832144	2832143
38–2W DH	2572344	2572343	2572342	2572341	2872344	2872343
42–1W DH	2538174	2538173	2538172	2538171	2838174	2838173
42–2W DH	2580394	2580393	2580392	2580391	2880394	2880393

IRTM – RT 1: – Casement and Double Hung GBG – LoĒ 180™

NOTE: Replacement stops must be ordered when replacing Integrity Round Top glass

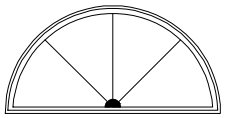

RT 1 – Solid Hub

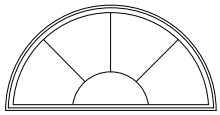

RT 1 – Open Hub

	LoĒ 180®					
	SW GBG	**PB GBG**	**BZ GBG**	**EG GBG**	**CS GBG**	**EB GBG**
Call Number	**RT 1 – Solid Hub – Casement**					
33–1W CA	19968608	19628133	19628132	19628131	39628134	38628134
33–2W CA	19661294	19661293	19661292	19661291	39661294	38661294
37–1W CA	19698610	19632153	19632152	19632151	39632154	38632154
RTM 37–2W CA	19669344	19669343	19669342	19669341	39669344	38669344
Call Number	**RT 1 – Solid Hub – Double Hung**					
26–2W DH	19647224	19647223	19647333	19647221	39647224	38647224
30–2W DH	19656264	19656263	19656262	19656261	39656264	38656264
36–1W DH	19698640	19632143	19632142	19632141	39632144	38632144
38–2W DH	19698644	19672434	19672342	19672341	39672344	38672344
42–1W DH	19698642	19639173	19638172	19638171	39638174	38638174
42–2W DH	19680394	19680393	19680392	19680391	39680394	38680394
Call Number	**RT 1 – Open Hub – Casement**					
33–1W CA	19528134	19528133	19528132	19528131	39528134	38528134
33–2W CA	19561294	19561293	19561292	19561291	39561294	38561294
37–1W CA	19532154	19532153	19532152	19532151	39532154	38532154
37–2W CA	19569344	19569343	19569342	19569341	39569344	38569344
Call Number	**RT 1 – Open Hub – Double Hung**					
26–2W DH	19547224	19547223	19647333	19647221	39647224	38547224
30–2W DH	19556264	19556223	19656262	19656261	39656264	38556264
36–1W DH	19532144	19532143	19632142	19632141	39632144	38532144
38–2W DH	19572344	19572343	19672342	19672341	39672344	38572344
42–1W DH	19538174	19538173	19638172	19638171	39638174	38538174
42–2W DH	19580394	19580393	19680392	19680391	39680394	38580394

IRTM – RT 6: 1–Lite – Casement / Awning– LoĒ² 272®, LoĒ³ 366® and LoĒ 180™

NOTE: Replacement stops must be ordered when replacing Integrity Round Top glass

Shape	Call Number	LoĒ² 272 One–Lite	LoĒ² 272 One–Lite Tempered	LoĒ³ 366 One–Lite	LoĒ³ 366 One–Lite Tempered	LoĒ 180 One–Lite	LoĒ 180 One–Lite Tempered
	RT 6 – 1 Lite – Casement / Awning						
	2118 CA	12617150	N/A	2617150	N/A	19617150	N/A
	2519 CA	12621160	N/A	2621160	N/A	19621160	N/A
	2526 CA	12621230	N/A	2621230	N/A	19621230	N/A
	2920 CA	12625170	N/A	2625170	N/A	19625170	N/A
	2928 CA	12625240	N/A	2625240	N/A	19625240	N/A
	3320 CA	12629170	N/A	2629170	N/A	19629170	N/A
	3328 CA	12629240	N/A	2629240	N/A	19629240	N/A
	3722 CA	12633180	N/A	2633180	N/A	19633180	N/A
	3729 CA	12633260	N/A	2633260	N/A	19633260	N/A
	4121 CA	12637180	N/A	2637180	N/A	19637180	N/A
	4128 CA	12637250	12637255	2637250	2637255	19637250	19637255
	4164 CA	12637610	12637615	2637610	2637615	19637610	19637615
	4921 CA	12698662	N/A	2698662	N/A	19698662	N/A
	4929 CA/AWN	12698664	12745255	2698664	2745255	19698664	19745255
	4965 CA	12698666	12745615	2698666	2745615	19698666	19745615
	5724 CA	12698668	N/A	2698668	N/A	19698668	N/A
	5731 CA/AWN	12698670	12753275	2698670	2753275	19698670	19753275
	5767 CA	12698672	12753635	2698672	2753635	19698672	19753635
	6523 CA	12661200	N/A	2661200	N/A	19661200	N/A
	6531 CA	12661270	12661275	2661270	2661275	19661270	19661275
	6567 CA	12661630	12661635	2661630	2661635	19661630	19661635
	7325 CA	12698674	N/A	2698674	N/A	19698674	N/A
	7333 CA/AWN	12698676	12769295	2698676	2769295	19698676	19769295
	7369 CA	N/A	12769655	N/A	2769655	N/A	19769655

LoĒ³ 366	SDL Spacer Bar Glass				
RT6 – Casement, Awning and Picture					
Call Number	Annealed Part Number	Tempered Part Number	Call Number	Annealed Part Number	Tempered Part Number
2118	2697151	–	4929	2698663	2745256
2519	2691161	–	4965	2698667	2745616
2526	2691231	–	5724	2698669	–
2920	2695171	–	5731	2698671	2753276
2928	2695241	–	5767	2698673	2753636
3320	2699171	–	6523	2691201	–
3328	2699241	–	6531	2691271	2691276
3722	2693181	–	6567	2691631	2691636
3729	2693261	–	7325	2698675	–
4121	2697181	–	7333	2698677	2769296
4128	2697251	2697256	7369	–	2769656
4164	2697611	2697616			
4921	2688661	–			

* SDL spacer bar glass available on Open Hub units only

IRTM – RT 6: – Casement GBG – LoĒ² 272®

NOTE: Replacement stops must be ordered when replacing Integrity Round Top glass

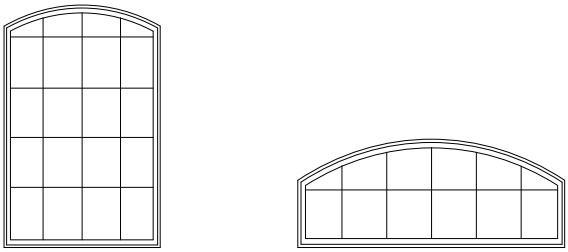

	LoĒ² 272®					
	SW GBG	PB GBG	BZ GBG	EG GBG	CS GBG	EB GBG
Call Number	**RT 6 – Casement / Awning**					
2118 CA	12617154	12617153	12617152	12617151	32617154	32617153
2519 CA	12621164	12621163	12621162	12621161	32621164	32621163
2526 CA	12621234	12621233	12621232	12621231	32621234	32621233
2920 CA	12625174	12625173	12625172	12625171	32625174	32625173
2928 CA	12625244	12625243	12625242	12625241	32625244	32625243
3320 CA	12626174	12629173	12629172	12629171	32629174	32629173
3328 CA	12629244	12629243	12629242	12629241	32629244	32629243
3722 CA	12633184	12633183	12633182	12633181	32633184	32633183
3729 CA	12633264	12633263	12633262	12633261	32633264	32633263
4121 CA	12637184	12637183	12637182	12637181	32637184	32637183
4128 CA	12637254	12637253	12637252	12637251	32637254	32637253
4164 CA	12637614	12637613	12637612	12637611	32637614	32637613
4921 CA	12698612	12645183	12645182	12645181	32645184	32645183
4929 CA/AWN	12698614	12645253	12645252	12645251	32645254	32645253
4965 CA	12698616	12645613	12645612	12645611	32645614	32645613
5724 CA	12698618	12653203	12653202	12653201	32653204	32653203
5731 CA/AWN	12698620	12653273	12653272	12653271	32653274	32653283
5767 CA	12698622	12653643	12653642	12653641	32653644	32653643
6523 CA	12661204	12661203	12661202	12661201	32661204	32661203
6531 CA	12661274	12661273	12661272	12661271	32661274	32661273
6567 CA	12661614	12661633	12661632	12661631	32661634	32661633
7325 CA	12698624	12669223	12669222	12669221	32669224	32669223
7333 CA/AWN	12698626	12669293	12669292	12669291	32669294	32669293
Call Number	**RT 6 – Casement / Awning (Tempered)**					
4128 CA	12637258	12637257	12637256	12637259	32637258	32637257
4164 CA	12637618	12637617	12637616	12637619	32637618	32637617
4929 CA/AWN	12645255	12645257	12645256	12645259	32645258	32645257
4965 CA	12645615	12645617	12645616	12645619	32645618	32645617
5731 CA/AWN	12653275	12653277	12653276	12653279	32653278	32653287
5767 CA	12653635	12653647	12653646	12653649	32653648	32653647
6531 CA	12661278	12661277	12661276	12661279	32661278	32661277
6567 CA	12661638	12661637	12661636	12661639	32661638	32661637
7333 CA/AWN	12669295	12669297	12669296	12669299	32669298	32669297
7369 CA	12669655	12669657	12669656	12669659	32669654	32669657

IRTM – RT 6: – Casement GBG – LoĒ³ 366®

NOTE: Replacement stops must be ordered when replacing Integrity Round Top glass

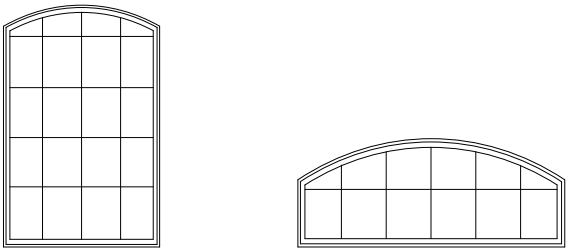

	LoĒ³ 366®					
	SW GBG	PB GBG	BZ GBG	EG GBG	CS GBG	EB GBG
Call Number	**RT 6 – Casement / Awning**					
2118 CA	2617154	2617153	2617152	2617151	2917154	2917153
2519 CA	2621164	2621163	2621162	2621161	2921164	2921163
2526 CA	2621234	2621233	2621232	2621231	2921234	2921233
2920 CA	2625174	2625173	2625172	2625171	2925174	2925173
2928 CA	2625244	2625243	2625242	2625241	2925244	2925243
3320 CA	2629174	2629173	2629172	2629171	2929174	2929173
3328 CA	2629244	2629243	2629242	2629241	2929244	2929243
3722 CA	2633184	2633183	2633182	2633181	2933184	2933183
3729 CA	2633264	2633263	2633262	2633261	2933264	2933263
4121 CA	2637184	2637183	2637182	2637181	2937184	2937183
4128 CA	2637254	2637253	2637252	2637251	2937254	2937253
4164 CA	2637618	2637613	2637612	2637611	2937614	2937613
4921 CA	2698612	2645183	2645182	2645181	2945184	2945184
4929 CA/AWN	2698614	2645253	2645252	2645251	2945254	2945253
4965 CA	2698616	2645613	2645612	2645611	2945614	2945613
5724 CA	2698618	2653203	2653202	2653201	2953204	2953203
5731 CA/AWN	2698620	2653283	2653282	2653281	2953284	2953283
5767 CA	2698622	2653643	2653642	2653641	2953644	2953643
6523 CA	2631204	2661203	2661202	2661201	2961204	2961203
6531 CA	2661274	2661273	2661272	2661271	2961274	2961273
6567 CA	2661634	2661633	2661632	2661631	2961634	2961633
7325 CA	2698624	2669223	2669222	2669221	2969224	2969223
7333 CA/AWN	2698626	2669293	2669292	2669291	2969294	2969293
Call Number	**RT 6 – Casement / Awning (Tempered)**					
4128 CA	2637258	2637257	2637256	2637259	2937258	2937257
4164 CA	2637618	2637617	2637616	2637619	2937618	2937617
4929 CA/AWN	2645255	2645257	2645256	2645259	2945258	2945257
4965 CA	2645615	2645617	2645616	2645619	2945618	2945617
5731 CA/AWN	2653275	2653287	2653286	2653289	2953288	2953287
5767 CA	2653635	2653647	2653646	2653649	2953648	2953647
6531 CA	2661278	2661277	2661276	2661279	2961278	2961277
6567 CA	2661638	2661637	2661636	2661639	2961638	2961637
7333 CA/AWN	2669295	2669297	2669296	2669299	2969298	2969297
7369 CA	2669655	2669657	2669656	2669659	2969658	2969657

IRTM – RT 6: – Casement GBG – LoĒ 180™

NOTE: Replacement stops must be ordered when replacing Integrity Round Top glass

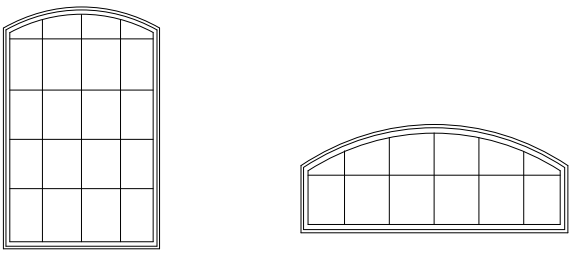

	LoĒ 180®					
	SW GBG	PB GBG	BZ GBG	EG GBG	CS GBG	EB GBG
Call Number	**RT 6 – Casement / Awning**					
2118 CA	19617154	19617153	19617152	19617151	39617154	38617154
2519 CA	19621164	19621163	19621162	19621161	39621164	38621164
2526 CA	19621234	19621233	19621232	19621231	39621234	38621234
2920 CA	19625174	19625173	19625172	19625171	39625174	38625174
2928 CA	19625244	19625243	19625242	19625241	39625244	38625244
3320 CA	19626174	19629173	19629172	19629171	39629174	38629174
3328 CA	19629244	19629243	19629242	19629241	39629244	38629244
3722 CA	19633184	19633183	19633182	19633181	39633184	38633184
3729 CA	19633264	19633263	19633262	19633261	39633264	38633264
4121 CA	19637184	19637183	19637182	19637181	39637184	38637184
4128 CA	19637254	19637253	19637252	19637251	39637254	38637254
4164 CA	19637614	19637613	19637612	19637611	39637614	38637614
4921 CA	19698612	19645183	19645182	19645181	39645184	38645184
4929 CA/AWN	19698614	19645253	19645252	19645251	39645254	38645254
4965 CA	19698616	19645613	19645612	19645611	39645614	38645614
5724 CA	19698618	19653203	19653202	19653201	39653204	38653204
5731 CA/AWN	19698620	19653273	19653272	19653271	39653274	38653284
5767 CA	19698622	19653643	19653642	19653641	39653644	38653644
6523 CA	19661204	19661203	19661202	19661201	39661204	38661204
6531 CA	19661274	19661273	19661272	19661271	39661274	38661274
6567 CA	19661614	19661633	19661632	19661631	39661634	38661634
7325 CA	19698624	19669223	19669222	19669221	39669224	38669224
7333 CA/AWN	19698626	19669293	19669292	19669291	39669294	38669294
Call Number	**RT 6 – Casement / Awning (Tempered)**					
4128 CA	19637258	19637257	19637256	19637259	39637258	38637258
4164 CA	19637618	19637617	19637616	19637619	39637618	38637618
4929 CA/AWN	19645255	19645257	19645256	19645259	39645258	38645258
4965 CA	19645615	19645617	19645616	19645619	39645618	38645618
5731 CA/AWN	19653275	19653277	19653276	19653279	39653278	38653288
5767 CA	19653635	19653647	19653646	19653649	39653648	38653648
6531 CA	19661278	19661277	19661276	19661279	39661278	38661278
6567 CA	19661638	19661637	19661636	19661639	39661638	38661638
7333 CA/AWN	19669295	19669297	19669296	19669299	39669298	38669298
7369 CA	19669655	19669657	19669656	19669659	39669654	38669658

IRTM – RT 6: 1–Lite – Double Hung and Door – LoĒ² 272®, LoĒ³ 366® and LoĒ 180™

NOTE: Replacement stops must be ordered when replacing Integrity Round Top glass

Shape	Call Number	One–Lite Part Number	One–Lite Tempered Part Number	LoĒ³ 366 One–Lite Part Number	LoĒ³ 366 One–Lite Part Number	LoĒ 180 One–Lite	LoĒ 180 One–Lite Tempered
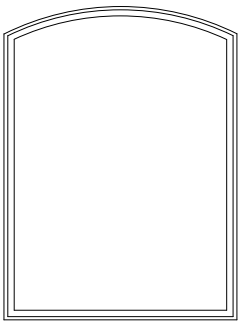	**RT 6 – 1 Lite – Double Hung**						
	2619 DH	12622160	N/A	2622160	N/A	19622160	N/A
	3021 DH	12626170	N/A	2626170	N/A	19626170	N/A
	3421 DH	12630170	N/A	2630170	N/A	19630170	N/A
	3622 DH	12632180	N/A	2632180	N/A	19632180	N/A
	3820 DH	12634170	N/A	2634170	N/A	19634170	N/A
	4222 DH	12638180	N/A	2638180	N/A	19638180	N/A
	5222 DH	12648190	N/A	2648190	N/A	19648190	N/A
	5266 DH	12648630	12648635	2648630	2648635	19648630	19648635
	6025 DH	12656210	N/A	2656210	N/A	19656210	N/A
	6032 DH	12656280	12656285	2656280	2656285	19656280	19656285
	6069 DH	12656650	12656655	2656650	2656655	19656650	19656655
	6824 DH	12698696	N/A	2698696	N/A	19698696	N/A
	6868 DH	12698698	12764655	2698698	2764655	19698698	19764655
	7626 DH	12672230	N/A	2672230	N/A	19672230	N/A
	7670 DH	N/A	12672675	N/A	2672675	N/A	19672675
	8429 DH	12680250	N/A	2680250	N/A	19680250	N/A
	8473 DH	N/A	12680695	N/A	2680695	N/A	19680695
	RT 6 – 1 Lite – Double Hung / Door						
	7225 DH/DR	12698702	N/A	2698702	N/A	19698702	N/A
	7233 DH/DR	12698704	12768295	2698704	2768295	19698704	19768295
	7269 DH/DR	N/A	12768655	N/A	2768655	N/A	19768655

LoĒ³ 366	SDL Spacer Bar Glass				
RT6 – Double Hung / Door					
Call Number	**Annealed Part Number**	**Tempered Part Number**	**Call Number**	**Annealed Part Number**	**Tempered Part Number**
2619	2692161	–	6025	2696211	–
3021	2696171	–	6032	2696281	2696286
3421	2690171	–	6069	2696651	2696656
3622	2693181	–	6824	2698697	–
3820	2694171	–	6868	2698699	2764656
4222	2698181	–	7225	2698703	–
5222	2698191	–	7233	2698705	2768296
5266	2698631	2698636	7269	–	2768656
			7626	2692231	–
			7670	–	2692676
			8429	2690251	–
			8473	–	2690696

* SDL spacer bar glass available on Open Hub units only

IRTM – RT 6: – Double Hung and Door GBG – LoĒ² 272®

NOTE: Replacement stops must be ordered when replacing Integrity Round Top glass

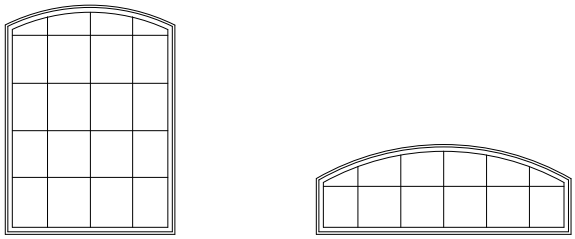

	LoĒ² 272®					
	SW GBG	PB GBG	BZ GBG	EG GBG	CS GBG	EB GBG
Call Number	**RT 6 – Double Hung**					
2619 DH	12622164	12622163	12622162	12622161	32622164	32622163
3021 DH	12626174	12626173	12626172	12626171	32626174	32626173
3421 DH	12630174	12630173	12630172	12630171	32630174	32630173
3622 DH	12632184	12632183	12632182	12632181	32632184	32632183
3820 DH	12634174	12634173	12634172	12634172	32634174	32634173
4222 DH	12638184	12638183	12638182	12638181	32638184	32638183
5222 DH	12648194	12648193	12648192	12648191	32648194	32648193
5266 DH	12648634	12648633	12648632	12648631	32648634	32648633
6025 DH	12656214	12656213	12656212	12656211	32656214	32656213
6032 DH	12656284	12656283	12656282	12656281	32656284	32656283
6069 DH	12656654	12656653	12656652	12656651	32656654	32656653
6824 DH	12698646	12664213	12664212	12664211	32664214	32664213
6868 DH	12698648	12664653	12664652	12664651	32665654	32664653
7626 DH	12672234	12672233	12672232	12672231	32672234	32672233
8429 DH	12680254	12680253	12680252	12680251	32680254	32680253
Call Number	**RT 6 – Double Hung (Tempered)**					
5266 DH	12648638	12648637	12648636	12648639	32648638	32648637
6032 DH	12656288	12656287	12656286	12656289	32656288	32656287
6069 DH	12656658	12656657	12656656	12656659	32656658	32656657
6868 DH	12664655	12664657	12664656	12666469	32664658	32664657
7670 DH	12672678	12672677	12672676	12672679	32672678	32672677
8473 DH	12680698	12680697	12680696	12680699	32680698	32680697
Call Number	**RT 6 – Door**					
7225 DOOR	12698649	12668223	12668222	12668221	32668224	32668223
7233 DOOR	12668295	12668297	12668296	12668290	32668298	32668293
Call Number	**RT 6 – Door (Tempered)**					
7233 DOOR	12668295	12668297	12668296	12668290	32668298	32668297
7269 DOOR	12668626	12668657	12668656	12668659	32668658	32668657

IRTM – RT 6: – Double Hung and Door GBG – LoĒ³ 366®

NOTE: Replacement stops must be ordered when replacing Integrity Round Top glass

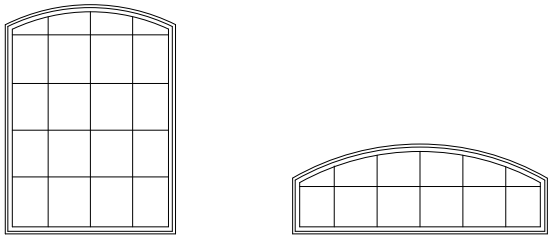

	LoĒ³ 366®					
	SW GBG	PB GBG	BZ GBG	EG GBG	CS GBG	EB GBG
Call Number	**RT 6 – Double Hung**					
2619 DH	2622164	2622163	2622162	2622161	2922164	2922163
3021 DH	2626174	2626173	2626172	2626171	2926174	2926173
3421 DH	2630174	2630173	2630172	2630171	2930174	2930173
3622 DH	2632184	2632183	2632182	2632181	2932184	2932183
3820 DH	2634174	2634173	2634172	2634171	2934174	2934173
4222 DH	2638184	2638183	2638182	2638181	2938184	2938183
5222 DH	2648194	2648193	2648192	2648191	2948194	2948193
5266 DH	2648634	2648633	2648632	2648631	2948634	2948633
6025 DH	2656214	2656213	2656212	2656211	2956214	2956213
6032 DH	2656284	2656283	2656282	2656281	2956284	2956283
6069 DH	2656654	2656653	2656652	2656651	2956654	2956653
6824 DH	2698646	2664213	2664212	2661211	2964214	2964213
6868 DH	2698648	2664653	2661652	2664651	2964654	2964653
7626 DH	2672234	2672233	2672232	2672231	2972234	2972233
8429 DH	2680254	2680253	2680252	2680251	2980254	2980253
Call Number	**RT 6 – Double Hung (Tempered)**					
5266 DH	2648638	2648637	2648636	2648639	2948638	2948637
6032 DH	2656288	2656287	2656286	2656289	2956288	2956287
6069 DH	2656658	2656657	2656656	2656659	2956658	2956657
6868 DH	2664655	2664657	2664656	2664659	2964658	2964657
7670 DH	2672678	2672677	2672676	2672679	2972678	2972677
8473 DH	2680698	2680697	2680696	2680699	2980698	2980697
Call Number	**RT 6 – Door**					
7225 DOOR	2698649	2668223	2668222	2668221	2968224	2968223
7233 DOOR	2698651	2668293	2668292	2668291	2968294	2968293
Call Number	**RT 6 – Door (Tempered)**					
7233 DOOR	2668295	2668297	2668296	2668299	2962898	2968297
7269 DOOR	2668655	2668657	2668656	2668659	2968658	2968657

IRTM – RT 6: – Double Hung and Door GBG – LoĒ 180™

NOTE: Replacement stops must be ordered when replacing Integrity Round Top glass

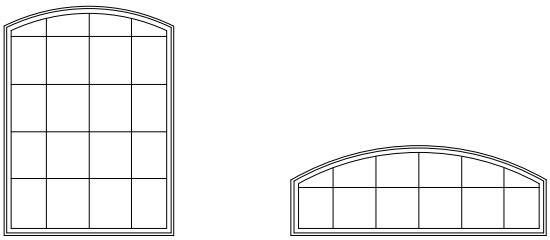

	LoĒ 180®					
	SW GBG	PB GBG	BZ GBG	EG GBG	CS GBG	EB GBG
Call Number	**RT 6 – Double Hung**					
2619 DH	19622164	19622163	19622162	19622161	39622164	38622164
3021 DH	19626174	19626173	19626172	19626171	39626174	38626174
3421 DH	19630174	19630173	19630172	19630171	39630174	38630174
3622 DH	19632184	19632183	19632182	19632181	39632184	38632184
3820 DH	19634174	19634173	19634172	19634172	39634174	38634174
4222 DH	19638184	19638183	19638182	19638181	39638184	38638184
5222 DH	19648194	19648193	19648192	19648191	39648194	38648194
5266 DH	19648634	19648633	19648632	19648631	39648634	38648634
6025 DH	19656214	19656213	19656212	19656211	39656214	38656214
6032 DH	19656284	19656283	19656282	19656281	39656284	38656284
6069 DH	19656654	19656653	19656652	19656651	39656654	38656654
6824 DH	19698646	19664213	19664212	19664211	39664214	38664214
6868 DH	19698648	19664653	19664652	19664651	39665654	38664654
7626 DH	19672234	19672233	19672232	19672231	39672234	38672234
8429 DH	19680254	19680253	19680252	19680251	39680254	38680254
Call Number	**RT 6 – Double Hung (Tempered)**					
5266 DH	19648638	19648637	19648636	19648639	39648638	38648638
6032 DH	19656288	19656287	19656286	19656289	39656288	38656288
6069 DH	19656658	19656657	19656656	19656659	39656658	38656658
6868 DH	19664655	19664657	19664656	19666469	39664658	38664658
7670 DH	19672678	19672677	19672676	19672679	39672678	38672678
8473 DH	19680698	19680697	19680696	19680699	39680698	38680698
Call Number	**RT 6 – Door**					
7225 DOOR	19698649	19668223	19668222	19668221	39668224	38668224
7233 DOOR	19668295	19668297	19668296	19668290	39668298	38668294
Call Number	**RT 6 – Door (Tempered)**					
7233 DOOR	19668295	19668297	19668296	19668290	39668298	38668298
7269 DOOR	19668626	19668657	19668656	19668659	39668658	38668658

IRTM – RT 7 and RT 8: One lite and GBG – LoĒ² 272® , LoĒ³ 366® and LoĒ 180™

NOTE: Replacement stops must be ordered when replacing Integrity Round Top glass

Shape	Call Number	1 –Lite Part Number	SW GBG Part Number	PB GBG Part Number	BZ GBG Part Number	EG GBG Part Number	CS GBG Part Number	EB GBG Part Number
	LoĒ² 272 RT 7 and RT 8 – Casement / Awning and Double Hung – Solid Hub							
	IQCIRM 25 – 1W CA	12698652	12698602	12621213	12621212	12621211	32621214	32621213
	IQCIRM 30 – 1W DH	12626270	12626274	12626273	12626272	12626271	32626274	32626273
	IQCIRM 34 – 1W DH	12630300	12630304	12630303	12630302	12630301	32630304	32630303
	IQCIRM 36 – 1W DH	12633330	12633334	12633333	12633332	12633331	32633334	32633333
	LoĒ³ 366 RT 7 and RT 8 – Casement / Awning and Double Hung – Solid Hub							
RT 7 – Solid Hub	IQCIRM 25 – 1W CA	2698652	2698602	2621213	2621212	2621211	2921214	2921213
	IQCIRM 30 – 1W DH	2626270	2626274	2626273	2626272	2626271	2926274	2926273
	IQCIRM 34 – 1W DH	2630300	2630304	2630303	2630302	2630301	2930304	2930303
	IQCIRM 36 – 1W DH	2633330	2633334	2633333	2633332	2633331	2933334	2933333
	LoĒ 180 RT 7 and RT 8 – Casement / Awning and Double Hung – Solid Hub							
RT 8 – Solid Hub	IQCIRM 25 – 1W CA	19698652	19698602	19621213	19621212	19621211	39621214	38621214
	IQCIRM 30 – 1W DH	19626270	19626274	19626273	19626272	19626271	39626274	38626274
	IQCIRM 34 – 1W DH	19630300	19630304	19630303	19630302	19630301	39630304	38630304
	IQCIRM 36 – 1W DH	19633330	19633334	19633333	19633332	19633331	39633334	38633334
	LoĒ² 272 RT 7 and RT 8 – Casement / Awning and Double Hung – Open Hub							
	IQCIRM 25 – 1W CA	12698652	12521214	12521213	12521212	12521211	32521214	32521213
	IQCIRM 30 – 1W DH	12626270	12526274	12526273	12526272	12526271	32526274	32526273
	IQCIRM 34 – 1W DH	12630300	12530304	12530303	12530302	12530301	32530304	32530303
	IQCIRM 36 – 1W DH	12633330	12533334	12533333	12533332	12533331	32533334	32533333
	LoĒ³ 366 RT 7 and RT 8 – Casement / Awning and Double Hung – Open Hub							
RT 7 – Open Hub	IQCIRM 25 – 1W CA	2698652	2521214	2521213	2521212	2521211	2821214	2821213
	IQCIRM 30 – 1W DH	2626270	2526274	2526273	2526272	2526271	2826274	2826273
	IQCIRM 34 – 1W DH	2630300	2530304	2530303	2530302	2530301	2830304	2830303
	IQCIRM 36 – 1W DH	2633330	2533334	2533333	2533332	2533331	2833334	2833333
	LoĒ 180 RT 7 and RT 8 – Casement / Awning and Double Hung – Open Hub							
RT 8 – Open Hub	IQCIRM 25 – 1W CA	19698652	19521214	19521213	19521212	19521211	39521214	38521214
	IQCIRM 30 – 1W DH	19626270	19526274	19526273	19526272	19526271	39526274	38526274
	IQCIRM 34 – 1W DH	19630300	19530304	19530303	19530302	19530301	39530304	38530304
	IQCIRM 36 – 1W DH	19633330	19533334	19533333	19533332	19533331	39533334	38533334

LoĒ³ 366	**SDL Spacer Bar Glass**
RT7 and RT 8 – Casement	
Call Number	**Annealed Part Number**
IQCIRM 25 – 1W CA	2698653
RT7 and RT 8 – Double Hung	
Call Number	**Annealed Part Number**
IQCIRM 30 – 1W DH	2696271
IQCIRM 34 – 1W DH	2690301
IQCIRM 36 – 1W DH	2693331

IRTM – RT 27 and RT 28: One Lite and GBG – LoĒ^2 272®, LoĒ^3 366® and LoĒ 180™

NOTE: Replacement stops must be ordered when replacing Integrity Round Top glass

Shape	Call Number	1 –Lite Part Number	SW GBG Part Number	PB GBG Part Number	BZ GBG Part Number	EG GBG Part Number	CS GBG Part Number	EB GBG Part Number
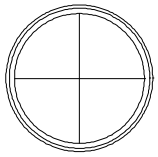	**LoĒ^2 272 RT 27**							
	ICIRM 3636	12632320	12632324	12632323	12632322	12632321	32632324	32632323
	LoĒ^3 366 RT 27							
	ICIRM 3636	2632320	2632324	2632323	2632322	2632321	2932324	2932323
	LoĒ 180 RT 27							
	ICIRM 3636	19632320	19632324	19632323	19632322	19632321	39632324	38632321
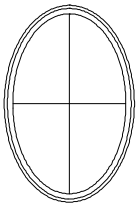	**LoĒ^2 272 RT 28**							
	IELPM 3248	12628440	12628444	12628443	12628442	12628441	32628444	32628443
	LoĒ^3 366 RT 28							
	IELPM 3248	2628440	2628444	2628443	2628442	2628441	2928444	2928443
	LoĒ 180 RT 28							
	IELPM 3248	19628440	19628444	19628443	19628442	19628441	39628444	38628444

LoĒ^3 366	SDL Spacer Bar Glass
RT27	
Call Number	**Annealed Part Number**
ICIRM 3636	2692321
RT28	
Call Number	**Annealed Part Number**
IELPM 3248	2698441

WOOD REPLACEMENT PARTS

When ordering replacement wood parts specify:

1. Profile number;
2. Description;
3. Part number;
4. Bare wood or white interior.

ILLUSTRATION *NOT TO SCALE*	DESCRIPTION	CALL NUMBER	BARE WOOD PART NO.	WHITE INTERIOR PART NO.
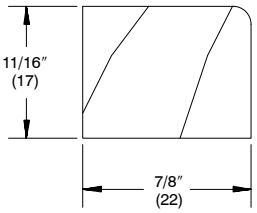	**IRTM DR** W4160 Complete set RT2	73W	31508135	39208135

NOTE: Stops (W4160) are still available for other size replacements.

GLASS REPLACEMENT

IRTM Replacement Glass Shapes

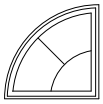

Casement–Quarter Circle
(RT7 Shown)

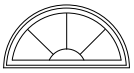

Casement–True Half (RT1)
(IRTM 33–1W CA Shown)

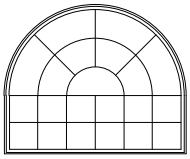

Casement–True Half above Springline(RT2)
(IRTM 7359 CA Shown)

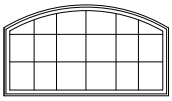

Casement–Eyebrow above Springline (RT6)
(IRTM 5731 CA Shown)

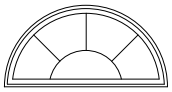

Double Hung True Half (RT1)
(IRTM 42–1W Shown)

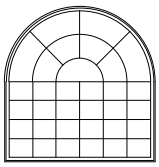

Double Hung–True Half above Springline (RT2)
(IRTM 6869 DH Shown)

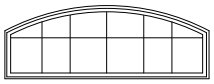

Double Hung–Eyebrow above Springline (RT6)
(IRTM 6824 Shown)

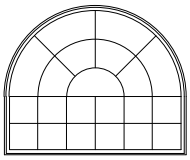

Door–True Half above Springline (RT2)
(IRTM 7359 Shown)

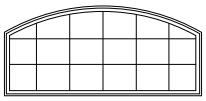

Door–Eyebrow above Springline (RT6)
(IRTM 6824 DH Shown)

When ordering replacement glass specify:

1. Description;
2. Call number;
3. Glazing;
4. Part number.

NOTE: All glass is IG 3/4″ Low E II with Argon unless stated otherwise.

Standard grille patterns within Round Top units differ between 3/4″ removable grille and grilles between glass, see below for examples.

LITE PATTERNS

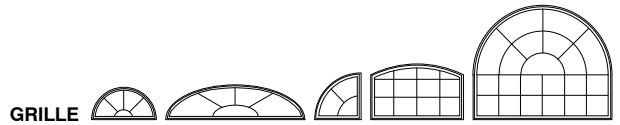

GRILLE

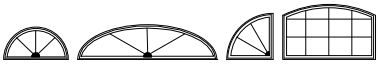

GBG

Not Available

Contact your sales representative for multiple assembly lite alignment. Certain assemblies do not allow for exact lite alignment.

Call Number	Shape	One–Lite Part Number	One–Lite Tempered Part Number	GBG Part Number	GBG Tempered Part Number
IRTM 7359 DOOR	RT2	12698688	12769565	N/A	N/A
IRTM 7325 DOOR	RT6	12698674	N/A	12698624	N/A
IRTM 7333 DOOR	RT6	12698676	12769295	12698626	12669295
IRTM 7369 DOOR	RT6	N/A	12769655	N/A	12669655

Tools needed:
- Safety glasses
- Protective gloves
- Stiff bladed putty knife
- Glazing (flexible) putty knife
- Side cutter,
- Hammer
- Nail set

Parts needed:
- Replacement glass
- Replacement glazing bead (W4160)
- Two sided adhesive glazing tape (if reusing wood glazing bead)
- Silicone bump–on
- Glass setting blocks
- Dow 1199 silicone sealant or equivalent neutral curing silicone
- 1 1/8″ 16 gauge brad nails

NOTE: It is recommended that new glazing bead be ordered when reglazing Integrity Round Tops. Replacement stops require some minor cutting for proper fit. Existing stops can be reused if no damage occurs during removal.

NOTE: True half circles shapes shown in illustrations, procedures are identical for elliptical shapes.

CAUTION: Always use extreme care when reglazing or handling broken glass. Use proper eye and hand protection.

Removing Old Glass

1. Slide the flexible glazing knife between the wood bead and the glass. Push knife around the perimeter of the glass to loosen the adhesive glazing tape. See illustration 1.

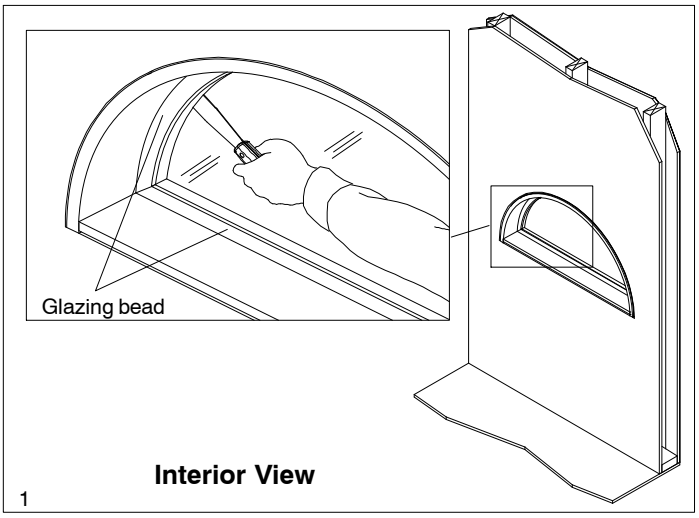

Removing Old Glass (Continued)

2. Starting at the center of the sill, pry the wood bead up and away from the frame using the stiff putty knife. Be careful not to damage or split wood bead if it is to be reused. See illustration 2.
3. Carefully remove any remaining nails with a side cutter.
4. Using a glazing knife, cut between the exterior Ultrex cladding and glass on all sides. See illustration 3. Start in the middle working toward the corners and pushing away from yourself.
5. Using a stiff putty knife carefully remove glass from the frame by pulling and prying at the same time. Note the location of the glass setting blocks as they can be reused.
6. Once the glass is out, clean any residual silicone from the Ultrex cladding.

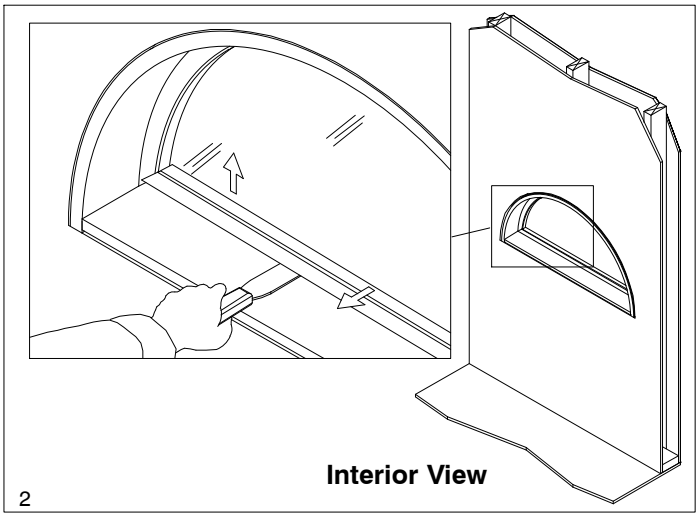

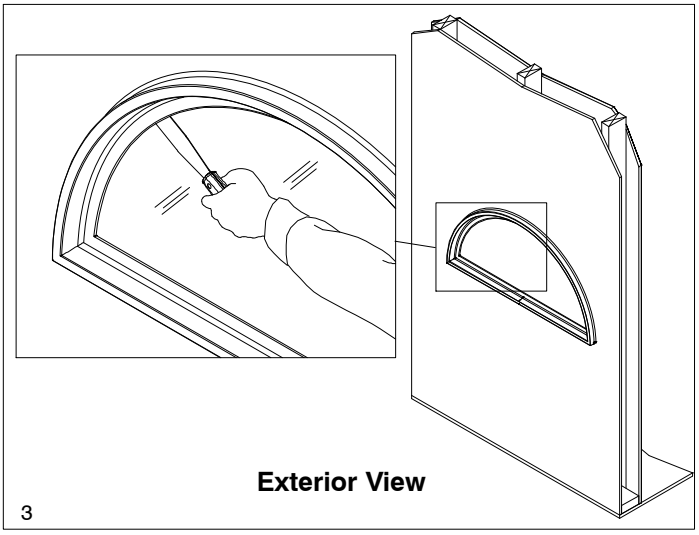

Installing New Glass

NOTE: Before proceeding it may be necessary to dry fit replacement wood bead to ensure proper fit. Some trimming or adjustment may be necessary.

1. Remove any glazing tape or adhesive residue remaining on glazing bead (if it is to be reused). Apply glazing tape to the flat surface at the edge of the glazing bead as shown in illustration 4.
2. Apply silicone bump–on on the exterior surface of the new glass centered over the spacer, 4″ (102) from each corner and 10–12″ (254–305) on center around the perimeter. See illustration 5.
3. Place glass setting blocks in frame against Ultrex cladding at quarter points from the corners on the sill. See illustration 6.

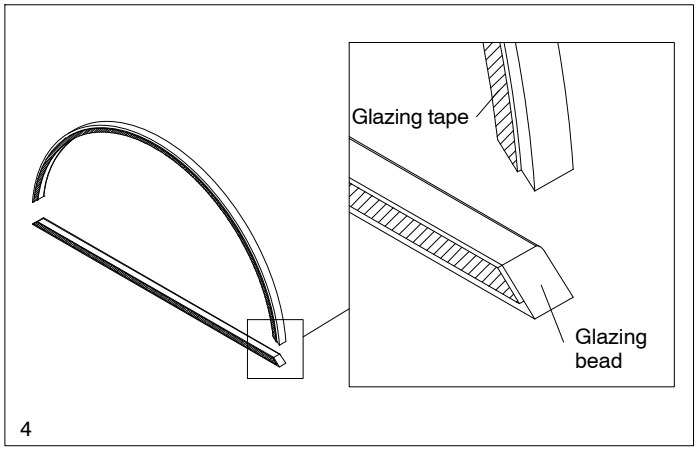

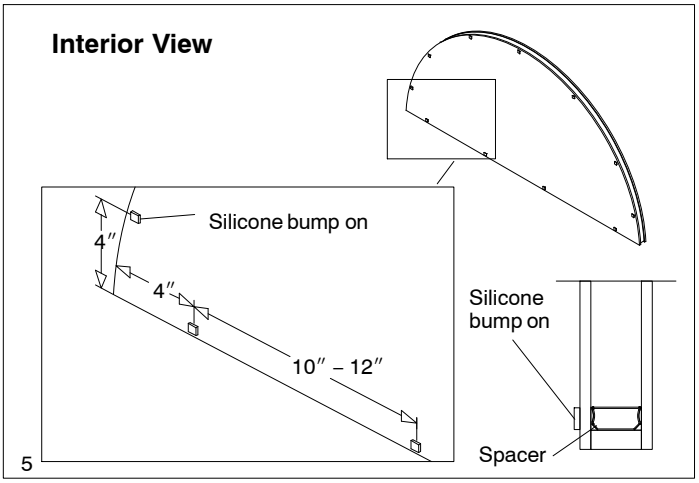

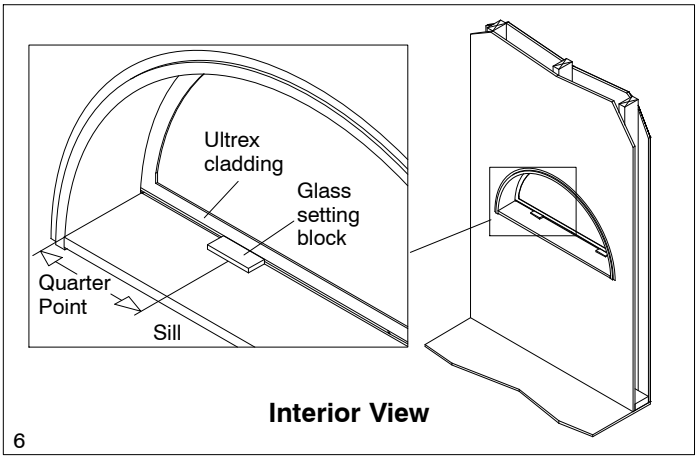

Installing New Glass (Continued)

4. With a caulking gun, run a 3/8″ x 5/16″ (10x8) continuous bead of silicone 7/16″ (11) from the wood frame on the interior side of the Ultrex cladding. See illustration 7.

CAUTION: Always wear proper hand protection when handling and replacing glass.

5. Install glass in frame, bottom first, then tip into place. Press glass into the silicone to ensure proper squeeze out.
6. Beginning with the radius wood bead remove the backing from the glazing tape and carefully press into place. Repeat the same procedure for the sill bead.
7. When all wood bead is in place press down firmly and nail to the frame 1/4″ from the interior side of the wood bead at intervals of 6″ – 8″ (152–203) using the 1 1/8″ 16 gauge brad nails. See illustration 8. Countersink nails with nail set.

NOTE: Do not clean excess sealant from the glass or Ultrex until fully cured. Once cured, cut away excess squeeze out with a utility knife.

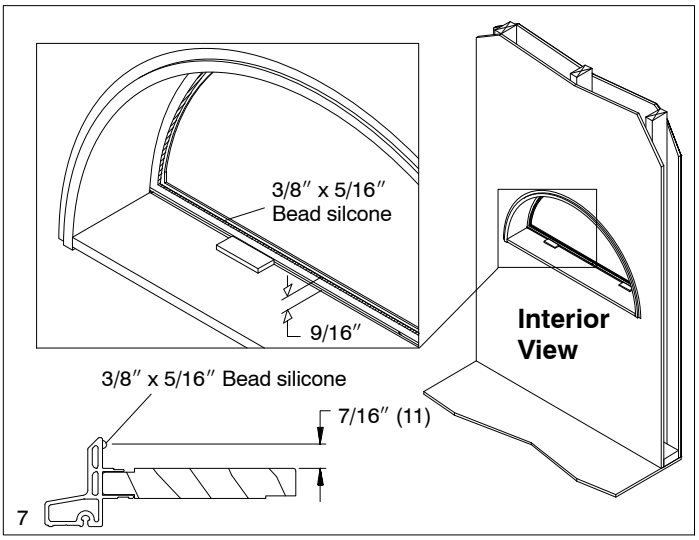

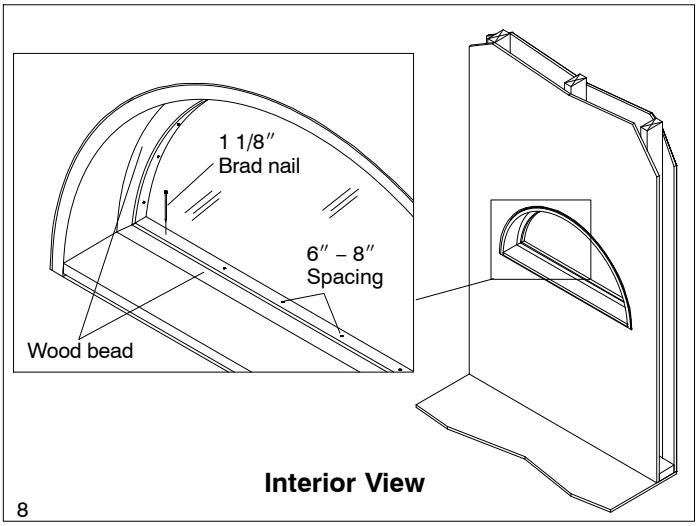

SERVICE – JAMB EXTENSION INSTALLATION

Tools needed: Safety glasses
Hammer
Drill

Parts needed: Jamb extension
1/8″ x 1 1/8″ 18 gauge staples or 4d finish nails

1. Fasten jamb extension to head jamb, radiused head jamb, sill or side jambs using 1/8″ x 1 1/8″ 18 gauge staples or 4d finish nails spaced every 3–5″ (76–127). Careful application of staples or nails is required to prevent damage to jamb extension and/or window unit. See illustration 1.
2. Fasten corners of extensions using 1/8″ x 1 1/8″ 18 gauge staples or 4d finish nails. See illustration 2.
3. Follow installation instructions for installing unit into rough opening or masonry opening.

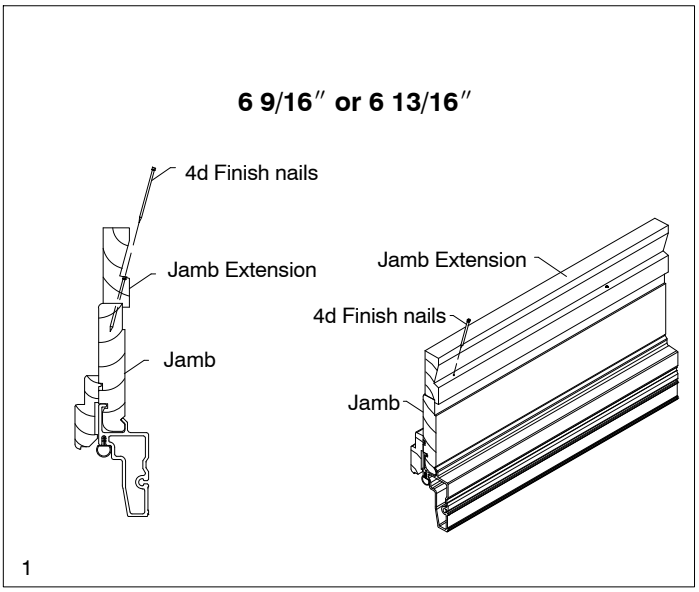

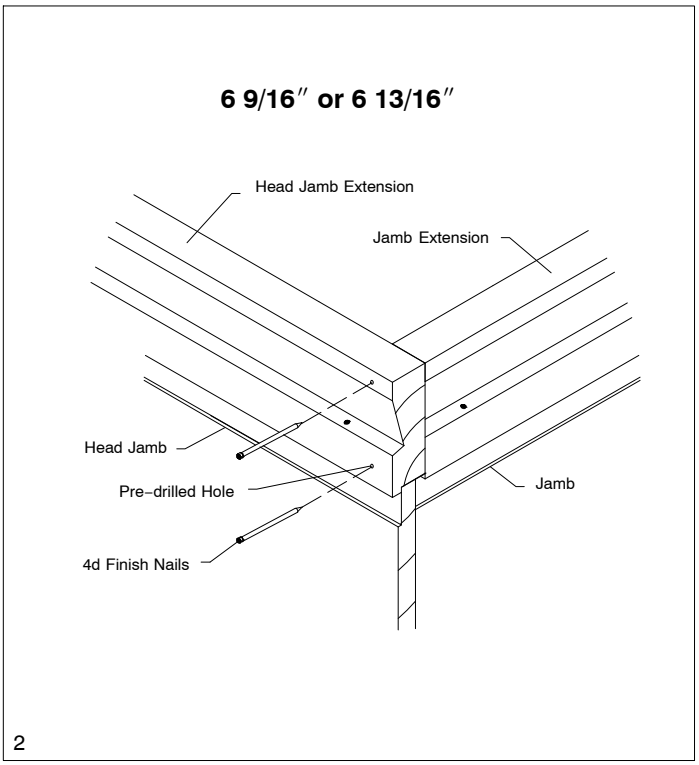

ROUND TOP FIELD APPLIED JAMB EXTENSION – MULLED UNITS

Tools needed: Safety glasses
Hammer
#2 Phillips screwdriver or cordless screwdriver
Drill
Wood workers glue

Parts needed: Jamb extension
Jamb extension bracket
8– #7 x 5/8″ wood screws
1/8″ x 1 1/8″ 18 gauge staples or 4d finish

1. Attach radius jamb extension to the head jamb with 1/8″x1 1/8″ 18 gauge staples or 4d finishing nails spaced 3–5″ (76–127) apart.
2. Using a #2 Phillips or cordless screwdriver, attach the jamb extension bracket to the radius jamb extension on each side with two #7 x 5/8″ wood screws. Apply a bead of woodworkers glue to the butt ends of the radius and lineal jamb extension. See illustration 17.
3. Join the radius and lineal jamb extension and adjust as necessary making sure the two jamb extensions are aligned at the butt joint. Screw the jamb extension bracket to the lineal jamb extension with two #7x5/8″ wood screws.
4. Nail the lineal jamb extension to the jamb with 1/8″x1 1/8″ 18 gauge staples or 4d finishing nails spaced 3–5″ (76–127) apart.
5. Follow installation instructions for installing unit into rough opening or masonry opening.

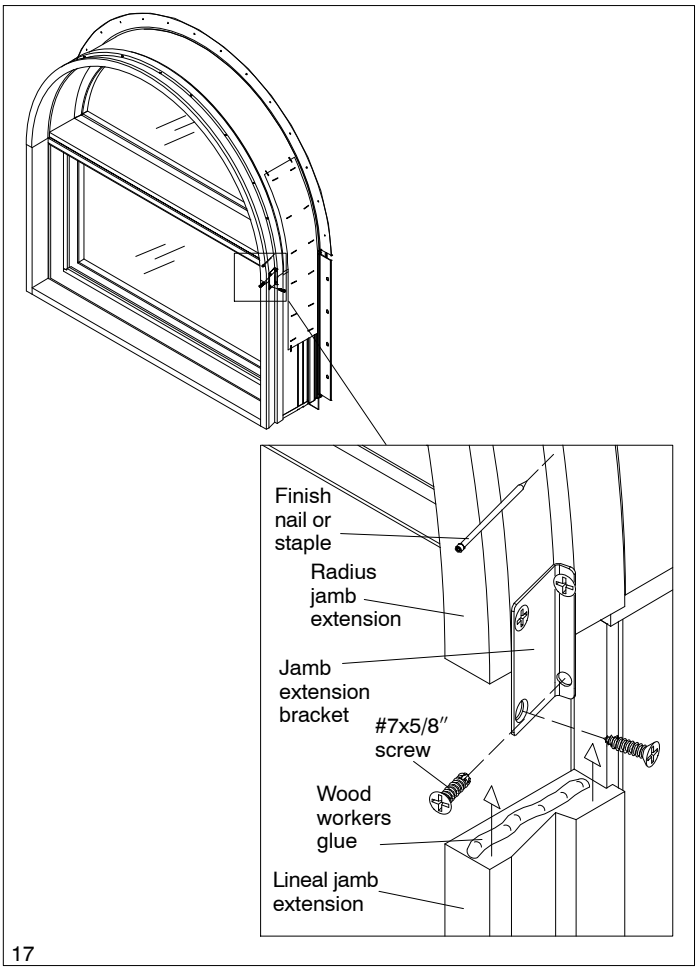

17