CHAPTER 4

INTEGRITY TRADITIONAL DOUBLE HUNG

Table of Contents

	PAGE
History	4.2
Part Identification – Operator	4.4
Part Identification – Stationary/Picture	4.5
Parts	
Hardware	4.6
Miscellaneous Parts	4.7
Weather Strip and Vinyl	4.8
Wood Parts	4.13
High Performance Kits	4.15
Sash Replacement	4.16
Grille Replacement	4.17
Screens and Screen Parts	4.18
Balance Tube Replacement	4.19
Balance Tube Replacement (STC)	4.21
Balance Tube Replacement (Impact)	4.23
Obsolete Parts	
Hardware	4.24
Weather Strip and Vinyl Parts	4.26
Replacement Wood Parts	4.32
High Performance Kits	4.34
Balance Tubes	4.35
Service	
Tilting or Removing Double Hung Sash	4.36
Installing Double Hung Sash	4.37
Removing the Screen	4.37
Installing the Screen	4.38
Sill Cover Replacement after 2/22/2010	4.39
Replacing Balance Tubes	4.40
Obsolete Service	
Removing and Replacing Stationary Sash	4.42
Replacing Balance Tubes	4.45
Replacing Sash Locks	4.48
Replacing Sash Keepers	4.48
Replacing Tilt Latches	4.49
Replacing Tilt Latch Covers	4.49
Replacing Sash Pivot Pins	4.50

NOTE: For double hung direct glazed transom information see Chapter 6 Round Top/Polygon.

ATTENTION:

- Specification and technical data are subject to change without notice.
- Numbers listed in parentheses ( ) are metric equivalents in millimeters rounded to the nearest whole number.

PRODUCED	UNIT TYPE	FEATURES OR CHANGES	DISCONTINUED
1995	Double Hung	April 1995: Integrity Double Hung introduced. Unit features 3/4″ Low E II glass with Argon, 4 9/16″ jambs.	January 2006
		April 1995: Pultruded fiberglass (Ultrex) exterior available in white or pebble gray, almond frost sash lock and tilt latches, white or pebble gray exterior screen surround. Abbreviated IDH	Arctic White – Feb. 2002
		October: Changed check rail pile weather strip (white) from location at check rail to a continuous length (gray) from check rail to sill.	February 1996
1996	Double Hung	January 1996: Tempered glass added as an option to certain size double hungs and picture units.	Present
		February 1996: Vinyl trim added to the stiles of the bottom sash.	November 1996
		February 1996: Clutch system upgraded to ensure positive locking during sash removal.	Present
		October 1996: Introduced 5 5/16″ and 6 13/16″ jamb extension available shipped loose for field application.	December 2000
		November 1996: Replaced jamb weather strip profile V167 with V169 and replaced bottom sash weather strip profile V161 with foam weather strip profile V189.	October 2002
		November 1996: Replaced header hollow bulb weather strip with a parting stop.	Present
1997	Double Hung	March 1997: Added cottage style double hung and new IDHP 5648 picture size.	Present
		September 1997: Introduced grilles–between–the–glass (GBG) simulated divided lite option.	Present
1998	Double Hung	May 1998: Sill/jamb plug redesigned.	Present
		July 1998: Changed to a reinforced design tilt latch cover.	Present
		November 1998: Introduced white hardware and screen option.	Present
2000	Double Hung	April 2000: Added 4 wide mulling option in CN 22 and CN26 widths available factory mulled. Added 2 wide – 2 high mulling option available factory mulled.	Present
		December 2000: 6 13/16″ jamb extension available factory applied. 5 5/16″ jamb extension no longer available.	Present
2001	Double Hung	March 2001: Added white interior finish.	Present
2002	Double Hung	February 4, 2002: Stone White replacing Arctic White as a standard color. Arctic White replacement parts available through the warranty period.	Present
		May 2002: New sizes available. Refer to Product bulletin #46.	Present
2002	Double Hung	October 2002: Revised bottom sash weather strip profile V189.	October 2002
		October 2002: Revised jamb weather strip profile V169.	Present
2003	Double Hung	September 9, 2003: Replaced sill weather strip profile V191 with V1165.	Present
		September 9, 2003: Replaced bottom sash weather strip V189 with V1232. V1194 bottom Jamb weather strip added in conjunction with current V169 weather strip at top.	Present
		September 9, 2003: Replaced bottom sash weather strip V189 with V1232. V1194 bottom Jamb weather strip added in conjunction with current V169 weather strip at top. Effective 9/29/03.	Present
May 2004	Double Hung	March 1, 2004: Pebble exterior / white interior GBGs available.	Present
October 2005	Double Hung	October 10, 2005: Sash weather strip V1232 was removed and replaced with frame weather strip as a running change.	October 2005
January 2006	Traditional Double Hung	January 2006: Redesigned product introduction featuring DP40 on all sizes and DP50 w/HP kit on all sizes, more wood to the interior, new hardware and additional larger operating and picture units. New abbreviation: ITDH.	Present
		July 2006: SDL offered on all Wood/Ultrex Series windows and doors. 7/8″ wide bars with Ultrex exterior and wood interior. See Product Bulletin 66 for more details.	Present
		September 2006: Prairie SDL and GBG Lite cuts made available for the Wood/Ultrex Series windows and doors. See Product Bulletin 70 for more details.	Present

PRODUCED	UNIT TYPE	FEATURES OR CHANGES	DISCONTINUED
2007	Traditional Double Hung	March 2007: Bronze exteriors introduced. November 2007: Evergreen exteriors introduced.	Present
2008	Traditional Double Hung	March 17, 2008: Cashmere exteriors introduced. June 2008: Impact products introduced. October 2008: CN68 equal sash introduced. Introduced Brass, Satin Nickel and Oil Rubbed Bronze hardware finishes for windows.	Present
2009	Traditional Double Hung	May 2009: LoĒ^3 366™ glass option introduced.	Present
2010	Traditional Double Hung	January 2010: Introduced the new grille tack and installation tool and added to accessory chapter. February 2010: Bottom Rail Weather–strip changed from V1561 and V1463 to V1930, Sill cover changed from W8793 to W10682. April 26, 2010: CN32 Wood Ultrex Double Hung introduced. Tempered Obscure glass option introduced.	Present
2011	Traditional Double Hung	April 2011: Added 44″ size to the ITDH product. LoĒ 180™ glass option introduced. September 2011: V2132,sash stop, replaces V1582. December 19, 2001: Introduced Wood–Ultrex special sizes and through jamb installation option.	Present
2012	Traditional Double Hung	April 2012: Introduced STC ratings on select Integrity Wood–Ultrex and All Ultrex products. June 2012: Simulated Checkrail Bar option introduced. August 6, 2012 – Balance Tube and Sash Stop changes made to select Impact units. August 27, 2012: Introduced Wood–Ultrex Ebony exterior and exterior casing options. October 29, 2012: Introduced Wood–Ultrex Expanded Sizes and Mulls.	Present

DOUBLE HUNG OPERATOR

HEAD JAMB & SILL DETAIL

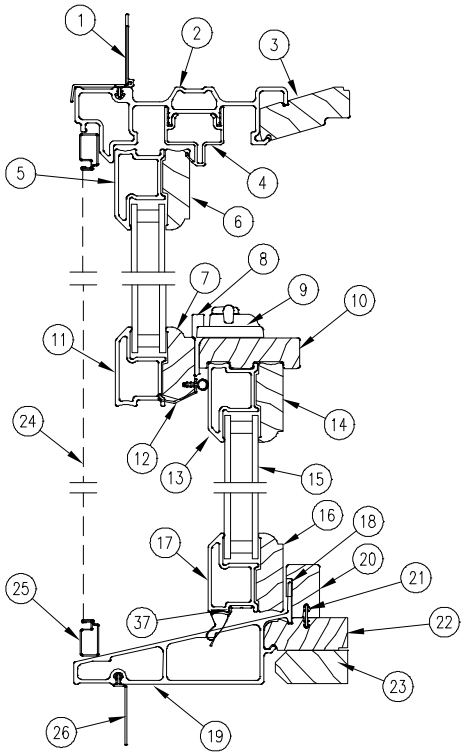

JAMB DETAIL

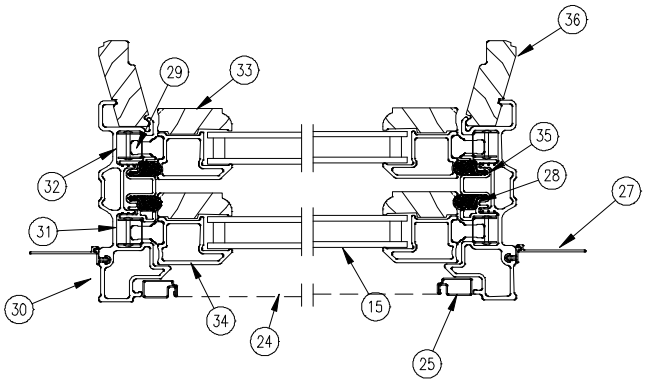

NOTE: Not to scale; specifications subject to change without notice.

1. Head Jamb Nailing Fin/Drip Cap
2. Head Jamb (Ultrex)
3. Head Jamb Liner
4. Head Jamb Part Stop
5. Top Rail (Ultrex)
6. Top Rail
7. Top Check Rail
8. Sash Keeper
9. Sash Lock
10. Bottom Check Rail Cover
11. Top Check Rail (Ultrex)
12. Top Check Rail Weather Strip
13. Bottom Check Rail (Ultrex)
14. Bottom Check Rail
15. Insulating Glass
16. Bottom Rail
17. Bottom Rail (Ultrex)
18. Sill Cover Foam Tape
19. Sill (Ultrex)
20. Sill Cover
21. Connecting Barb
22. Sill Liner
23. Sill Filler Block
24. Screen Mesh
25. Screen Frame
26. Sill Nailing Fin
27. Jamb Nailing Fin
28. Jamb Weather Strip
29. Sash Pivot Pin
30. Jamb (Ultrex)
31. Top Sash Balance Tube Assembly
32. Bottom Sash Balance Tube Assembly
33. Stile
34. Stile (Ultrex)
35. Jamb Carrier Assembly
36. Jamb Liner
37. Bottom Sash Weather Strip

DOUBLE HUNG
STATIONARY – PICTURE

HEAD JAMB & SILL DETAIL

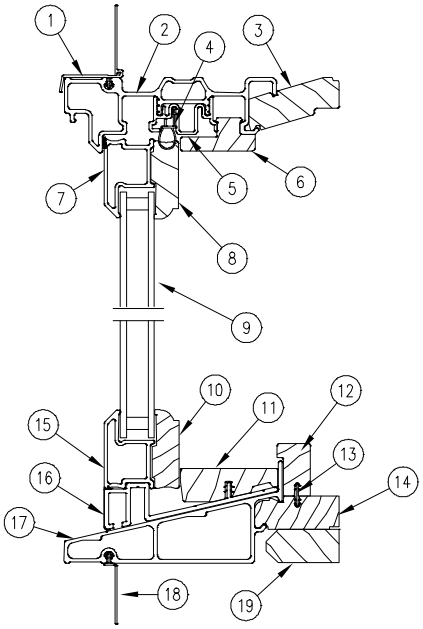

JAMB DETAIL

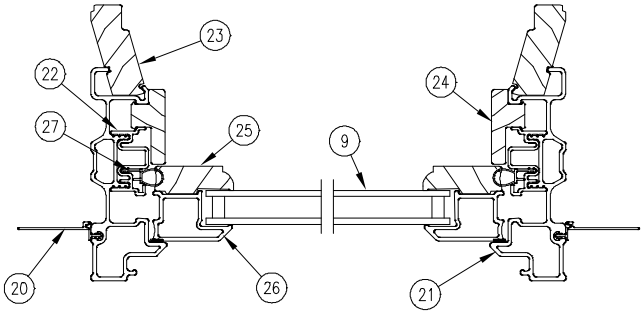

NOTE: Not to scale; specifications subject to change without notice.

1. Head Jamb Nailing Fin/Drip Cap
2. Head Jamb (Ultrex)
3. Head Jamb Liner
4. Frame Weather Strip
5. Jamb Carrier
6. Head Jamb Wood Stop
7. Top Rail (Ultrex)
8. Top Rail
9. Insulating Glass
10. Bottom Rail
11. Sill Wood Stop
12. Sill Cover
13. Connecting Barb
14. Sill Liner
15. Bottom Rail (Ultrex)
16. Vinyl Sill Filler
17. Sill (Ultrex)
18. Sill Nailing Fin
19. Sill Filler Block
20. Jamb Nailing Fin
21. Jamb (Ultrex)
22. Vinyl Jamb Carrier
23. Jamb Liner
24. Jamb Wood Stop
25. Stile
26. Stile (Ultrex)
27. Jamb Weather Strip

When ordering replacement Integrity Double Hung hardware specify:

1. Type of unit;
2. Part number;
3. Description.

ILLUSTRATION *NOT TO SCALE*	**DESCRIPTION**	**OPER./COLOR**	**PART NO.**
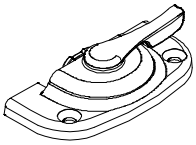	**Sash Cam lock** includes fasteners: *2–#6 x 1 1/2″ Phillips flat head screws*	AF WH ORBZ SN BS	11896848 11896846 11896850 11896852 11896854
	Keeper includes fasteners: *2–#6 x 1 1/2″ Phillips flat head screws*	AF WH ORBZ SN BS	11896857 11896856 11896858 11896859 11896860
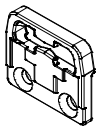	**Keeper, Impact** includes fasteners: *2–#10 x 1 1/2″ Phillips flat head screws*	AF WH ORBZ SN BS	11896761 11896760 11896871 11896872 11896873
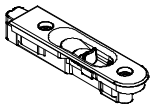	**Tilt Latch, Impact** includes fasteners: *1–#7 x 1 1/4″ Phillips head screws*	AF WH ORBZ SN BS	11896763 11896762 11896874 11896875 11896876
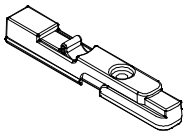	**Top Sash Tilt Latch** includes fasteners: *1–#6 x 1 1/2″ Phillips flat head screws*	BG	11869708
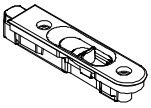	**Bottom Sash Tilt Latch** includes fasteners: *1–#7 x 1 1/4 Phillips pan head screw*	AF WH ORBZ SN BS	11896862 11896861 11896863 11896864 11896865
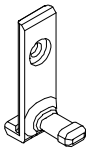	**Top Sash Pivot Pin** includes fasteners: *1–#7 x 3/4″ Phillips pan head screw*		118625
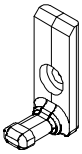	**Bottom Sash Pivot Pin** includes fasteners: *1–#7 x 3/4″ Phillips pan head screw*		10815279

MISCELLANEOUS PARTS

When ordering replacement Integrity Double Hung parts specify:

1. Type of unit;
2. Part number;
3. Description.

ILLUSTRATION *NOT TO SCALE*	DESCRIPTION	OPER./COLOR	PART NO.
	Check Rail Pad 1 1/4″ x 1/2″ *NOTE: Adhesive backed*	BG	15607562
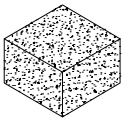	**Balance Tube Foam Plug** 3/4″ x 3/4″ x 1/2″	WH	10500104
	Balance Tube Plug	Natural	10500174
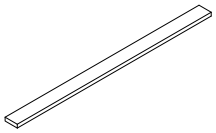	**Frame to Sash Seal**	150′ (46 meters) BK	10501118
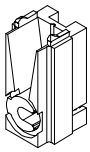	**Balance Tube Clutch**	Non–handed BG	105530
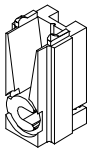	**Balance Tube Clutch, Impact**	Non–handed BK	11867892
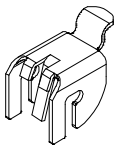	**Rotating Hanger Clip**		106610
	Through Jamb Plug	BG	11882969

WEATHER STRIP AND VINYL

When ordering replacement Integrity Double Hung weather strip and vinyl parts specify:

1. Description;
2. Profile number;
3. Part number;
4. Quantity.

ILLUSTRATION *NOT TO SCALE*	DESCRIPTION	LENGTH	PART NO.
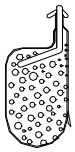	**Frame Weather Strip** V938	BG	
	CN36	17 5/16″ (439)	17010836
	CN40	19 5/16″ (490)	17010840
	CN44	21 5/16″ (541)	17010844
	CN48	23 5/16″ (592)	17010848
	CN52	25 5/16″ (643)	17010852
	CN56	27 5/16″ (693)	17010856
	CN60	29 5/16″ (744)	17010860
	CN64	31 5/16″ (795)	17010864
	CN68	33 5/16″ (846)	17010869
	CN68C	39 5/16″ (998)	17010868
	CN72	35 5/16″ (897)	17010872
	CN76	37 5/16″ (947)	17010876
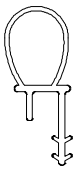 Lineal 96″ (2438) 17030099	**Jamb Frame Weather Strip Picture and Transom** V1474	BG	
	CN16	13 7/8″ (352)	17030016
	CN24	21 7/8″ (556)	17030024
	CN36	33 7/8″ (860)	17030037
	CN40	37 7/8″ (962)	17030040
	CN44	41 7/8″ (1064)	17030044
	CN48	45 7/8″ (1165)	17030048
	CN52	49 7/8″ (1267)	17030052
	CN56	53 7/8″ (1368)	17030056
	CN60	57 7/8″ (1470)	17030060
	CN64	61 7/8″ (1571)	17030064
	CN68	65 7/8″ (1673)	17030068
	CN72	69 7/8″ (1775)	17030072
	CN76	73 7/8″ (1876)	17030076
	Head Jamb Frame Weather Strip Picture and Transom V1474	BG	
	CN22	18 7/8″ (479)	17030022
	CN26	22 7/8″ (581)	17030026
	CN30	26 7/8″ (683)	17030030
	CN32	28 7/8″ (733)	17030032
	CN34	30 7/8″ (784)	17030034
	CN36	32 7/8″ (835)	17030036
	CN38	34 7/8″ (886)	17030038
	CN42	38 7/8″ (987)	17030042
	CN50	46 7/8″ (1191)	17030050
	CN54	50 7/8″ (1292)	17030054
	CN62	58 7/8″ (1495)	17030062

ILLUSTRATION *NOT TO SCALE*	DESCRIPTION	LENGTH	PART NO.
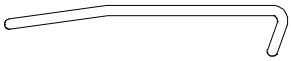	**Jamb Frame Stiffener – Impact** V1668 BG		
	CN16	11 1/2″ (292)	11896764
	CN40	35 1/2″ (902)	11896765
	CN44	39 1/2″ (1003)	11896710
	CN48	43 1/2″ (1105)	11896766
	CN52	47 1/2″ (1207)	11896767
	CN56	51 1/2″ (1308)	11896768
	CN60	55 1/2″ (1410)	11896769
	CN64	59 1/2″ (1511)	11896770
	CN68	63 1/2″ (1613)	11896771
	CN72	67 1/2″ (1715)	11896772
	CN76	71 1/2″ (1816)	11896773
	Head Jamb Frame Stiffener – Impact V1668 BG		
	CN22	17 1/2″ (445)	11896774
	CN26	21 1/2″ (546)	11896775
	CN30	25 1/2″ (648)	11896776
	CN32	27 1/2″ (699)	11896815
	CN34	29 1/2″ (749)	11896777
	CN36	31 1/2″ (800)	11896778
	CN38	33 1/2″ (851)	11896779
	CN42	37 1/2″ (953)	11896780
	CN50	45 1/2″ (1156)	11896781
	CN54	49 1/2″ (1257)	11896782
	CN62	57 1/2″ (1461)	11896783
	Impact Top Sash Interlock V1661		
	CN22	18 31/32″ (481)	11896753
	CN26	22 31/32″ (583)	11896754
	CN30	26 31/32″ (684)	11896755
	CN32	28 31/32″ (735)	11896816
	CN34	30 31/32″ (786)	11896756
	CN36	32 31/32″ (837)	11896757
	CN38	34 31/32″ (888)	11896758
	CN42	38 31/32″ (989)	11896759
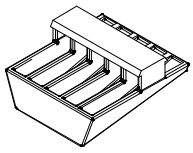	**Impact Sill Block**		11867891
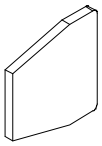	**Jamb Liner Gasket** BG		10500386
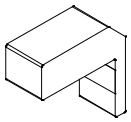	**Plug, Bottom Sash Stop** *NOTE: Adhesive transfer tape applied.*		10506254

When ordering replacement Integrity Double Hung weather strip and vinyl parts specify:

1. Description; Profile number; Part number; Quantity

ILLUSTRATION *NOT TO SCALE*	DESCRIPTION	LENGTH	PART NO.
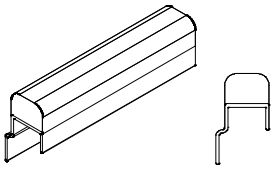	**Sash Stop** V2132 BG Used Sept 6, 2011 to Present		
	ITDH Egress units	1 7/16″ (37)	11870144
	Units except Impact Cottage/Egress	2 1/4″ (57)	11870224
	Impact CN 3676 and CN 3876	6 3/4″ (171)	11870674
	Impact Cottage 36 and 38	6 3/4″ (171)	11870674
	Lineal	96″ (2438)	11870096
	Sash Stop V1582 BG Used Jan 2006 to Sept 2011	Discontinued replace with current	
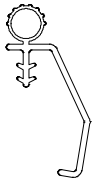	**Check Rail Weather Strip** V1372 BG		
	CN22	18 15/16″ (481)	17007522
	CN26	22 15/16″ (583)	17007526
	CN30	26 15/16″ (684)	17007530
	CN32	28 15/16″ (735)	17007532
	CN34	30 15/16″ (786)	17007534
	CN36	32 15/16″ (837)	17007536
	CN38	34 15/16″ (888)	17007538
	CN42	38 15/16″ (989)	17007542
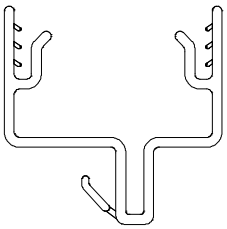	**Head Jamb Parting Stop** V1328 BG		
	CN22	19 3/32″ (485)	17003322
	CN26	23 3/32″ (587)	17003326
	CN30	27 3/32″ (688)	17003330
	CN32	29 3/32″ (739)	17003332
	CN34	31 3/32″ (790)	17003334
	CN36	33 3/32″ (841)	17003336
	CN38	35 3/32″ (891)	17003338
	CN42	39 3/32″ (993)	17003342
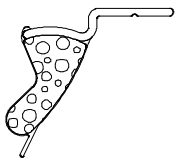	**Bottom Sash Weather Strip Kit** V1930 BG *includes:* *Weather Strip* *6 – #8 x 3/4″ screws* *1 – instruction*		
	CN22	18 11/16″ (475)	11897191
	CN26	22 11/16″ (576)	11897192
	CN30	26 11/16″ (678)	11897193
	CN32	28 11/16″ (729)	11897040
	CN34	30 11/16″ (779)	11897194
	CN36	32 11/16″ (830)	11897195
	CN38	34 11/16″ (881)	11897196
	CN42	38 11/16″ (983)	11897197

Description

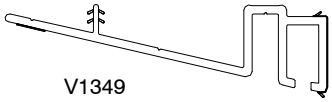

A: Sill Filler – Picture/Transom
Usage: 5/2002 to Present

Size	CN	Color	Part Number
19 1/8″ (486)	CN22	WH	17000922
		PB	17000822
		BZ	17000722
		EG	17000622
		CS	17000522
		EB	17000422
23 1/8″ (587)	CN26	WH	17000926
		PB	17000826
		BZ	17000726
		EG	17000626
		CS	11700526
		EB	17000426
27 1/8″ (689)	CN30	WH	17000930
		PB	17000830
		BZ	17000731
		EG	17000631
		CS	11700531
		EB	17000431
29 1/8″ (740)	CN32	WH	17000932
		PB	17000832
		BZ	17000732
		EG	17000632
		CS	11700532
		EB	17000432
31 1/8″ (791)	CN34	WH	17000934
		PB	17000834
		BZ	17000734
		EG	17000634
		CS	11700534
		EB	17000434
33 1/8″ (841)	CN36	WH	17000936
		PB	17000836
		BZ	17000737
		EG	17000637
		CS	11700537
		EB	17000437

Size	CN	Color	Part Number
35 1/8″ (892)	CN38	WH	17000938
		PB	17000838
		BZ	17000738
		EG	17000638
		CS	11700538
		EB	17000438
39 1/8″ (994)	CN42	WH	17000942
		PB	17000842
		BZ	17000743
		EG	17000643
		CS	11700543
		EB	17000443
47 1/8″ (1197)	CN50	WH	17000950
		PB	17000850
		BZ	17000750
		EG	17000650
		CS	11700550
		EB	17000450
51 1/8″ (1299)	CN54	WH	17000954
		PB	17000854
		BZ	17000755
		EG	17000655
		CS	11700555
		EB	17000458
59 1/8″ (1502)	CN62	WH	17000962
		PB	17000862
		BZ	17000762
		EG	17000662
		CS	11700562
		EB	17000462

ILLUSTRATION *NOT TO SCALE*	DESCRIPTION	LENGTH	PART NO.	
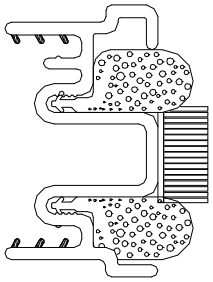 *includes:* *V1327 Vinyl jamb carrier* *V938 Frame weather strip* *Checkrail pad*	**Jamb Carrier Assembly – Operator**		**LH**	**RH**
	CN36	33 31/32″ (863)	17370137	17370136
	CN40	37 31/32″ (964)	17370141	17370140
	CN44	41 31/32″ (1066)	17370145	17370144
	CN48	45 31/32″ (1168)	17370149	17370148
	CN52	49 31/32″ (1269)	17370153	17370152
	CN56	53 31/32″ (1371)	17370157	17370156
	CN60	57 31/32″ (1472)	17370161	17370160
	CN64	61 31/32″ (1574)	17370165	17370164
	CN68	65 31/32″ (1676)	17370269	17370268
	CN68C	65 31/32″ (1676)	17370169	17370168
	CN72	69 31/32″ (1777)	17370173	17370172
	CN76	73 31/32″ (1879)	17370177	17370176
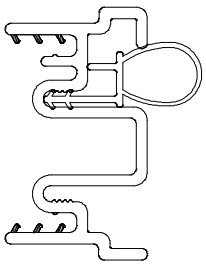 *includes:* *V1327 Vinyl jamb carrier* *V1474 Head jamb weather strip*	**Head Jamb Carrier Assembly– Picture/ Transom**			
	CN22	18 7/8″ (479)	17370222	
	CN26	22 7/8″ (581)	17370226	
	CN30	26 7/8″ (683)	17370230	
	CN32	28 7/8″ (683)	17370232	
	CN34	30 7/8″ (784)	17370234	
	CN36	32 7/8″ (835)	17370236	
	CN38	34 7/8″ (886)	17370238	
	CN42	38 7/8″ (987)	17370242	
	CN50	46 7/8″ (1191)	17370250	
	CN54	50 7/8″ (1292)	17370254	
	CN62	58 7/8″ (1495)	17370262	
	Jamb Carrier Assembly – Picture/Transom		**LH**	**RH**
	CN16	13 31/32″ (355)	17370017	17370016
	CN24	21 31/32″ (558)	17370025	17370024
	CN36	33 31/32″ (863)	17370037	17370036
	CN40	37 31/32″ (964)	17370041	17370040
	CN44	41 31/32″ (1066)	17370045	17370044
	CN48	45 31/32″ (1168)	17370049	17370048
	CN52	49 31/32″ (1269)	17370053	17370052
	CN56	53 31/32″ (1371)	17370057	17370056
	CN60	57 31/32″ (1472)	17370061	17370060
	CN64	61 31/32″ (1574)	17370065	17370064
	CN68	68 31/32″ (1676)	17370069	17370068
	CN72	69 31/32″ (1777)	17370073	17370072
	CN76	73 31/32″ (1879)	17370077	17370076

TO ORDER REPLACEMENT WOOD PARTS

When ordering replacement wood parts specify:

1. Profile number;
2. Part number;
3. Length;
4. Handing (if applicable);
5. Bare wood or white interior.

ILLUSTRATION *NOT TO SCALE*	DESCRIPTION	LENGTH	BARE WOOD PART NO.	WHITE INTERIOR PART NO.
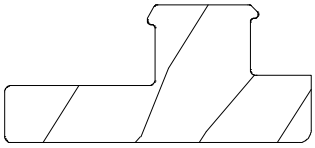 W8936 – Interior Filler	**Interior Stop–Head Jamb** W8936			
	CN22	19 1/8″ (486)	31510722	39210722
	CN26	23 1/8″ (587)	31510726	39210726
	CN30	27 1/8″ (689)	31510730	39210730
	CN32	29 1/8″ (740)	31510732	39210732
	CN34	31 1/8″ (791)	31510734	39210734
	CN36	33 1/8″ (841)	31510736	39210736
	CN38	35 1/8″ (892)	31510738	39210738
	CN42	39 1/8″ (994)	31510742	39210742
	CN50	47 1/8″ (1197)	31510750	39210750
	CN54	51 1/8″ (1299)	31510754	39210754
	CN62	59 1/8″ (1502)	31510762	39210762
	Interior Stop – Jamb Picture/Transom W8936			
	CN16	12 9/32″ (312)	31510816	39210816
	CN24	20 9/32″ (515)	31510824	39210824
	CN36	32 9/32″ (820)	31510837	39210837
	CN40	36 9/32″ (922)	31510840	39210840
	CN44	40 9/32″ (1023)	31510844	39210844
	CN48	44 9/32″ (1125)	31510848	39210848
	CN52	48 9/32″ (1226)	31510852	39210852
	CN56	52 9/32″ (1328)	31510856	39210856
	CN60	56 9/32″ (1430)	31510860	39210860
	CN64	60 9/32″ (1531)	31510864	39210864
	CN68	64 9/32″ (1633)	31510868	39210868
	CN72	68 9/32″ (1734)	31510872	39210872
	CN76	72 9/32″ (1836)	31510876	39210876

ILLUSTRATION *NOT TO SCALE*	DESCRIPTION		LENGTH	BARE WOOD PART NO.	WHITE INTERIOR PART NO.
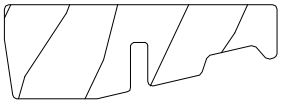 W8794 – Sill Interior Stop	**Interior Stop–Sill** W8794				
		CN22	19 13/32″ (493)	31510322	39210322
		CN26	23 13/32″ (593)	31510326	39210326
		CN30	27 13/32″ (696)	31510330	39210330
		CN32	29 13/32″ (747)	31510332	39210332
		CN34	31 13/32″ (798)	31510334	39210334
		CN36	33 13/32″ (849)	31510336	39210336
		CN38	35 13/32″ (899)	31510338	39210338
		CN42	39 13/32″ (1001)	31510342	39210342
		CN50	47 13/32″ (1204)	31510350	39210350
		CN54	51 13/32″ (1306)	31510354	39210354
		CN62	59 13/32″ (1509)	31510362	39210362
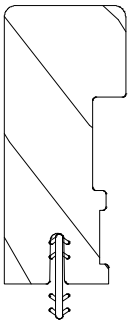 W9969 – Impact Sill Cover V803 Connecting Barb included	**Impact Sill Cover Kit** W9969				
		CN22	19 15/16″ (506)	11896784	11896794
		CN26	23 15/16″ (608)	11896785	11896795
		CN30	27 15/16″ (709)	11896786	11896796
		CN32	29 15/16″ (608)	11897042	11897043
		CN34	31 15/16″ (811)	11896787	11896797
		CN36	33 15/16″ (862)	11896788	11896798
		CN38	35 15/16″ (912)	11896789	11896799
		CN42	39 15/16″ (1014)	11896790	11896800
		CN50	47 15/16″ (1217)	11896791	11896801
		CN54	51 15/16″ (1319)	11896792	11896802
		CN62	59 15/16″ (1522)	11896793	11896803
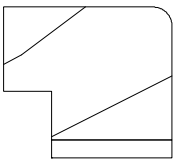 W10161 – Impact Glazing Bead glazing tape applied	**Impact Glazing Bead** W10161		97″ (2464)	11896820	11896821
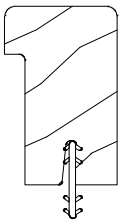 W10682 Sill Cover with V803 connecting barb, foam tape, instructions 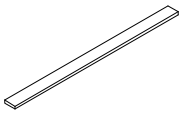	**Sill Cover Kit** W10682				
		CN22	19 29/32″ (506)	11897198	11897204
		CN26	23 29/32″ (608)	11897199	11897205
		CN30	27 29/32″ (709)	11897200	11897206
		CN32	29 29/32″ (760)	11897230	11897231
		CN34	31 29/32″ (811)	11897213	11897207
		CN36	33 29/32″ (862)	11897201	11897208
		CN38	35 29/32″ (912)	11897202	11897209
		CN42	39 29/32″ (1014)	11897203	11897210
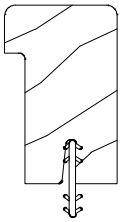 W10682 Sill Cover with V803 connecting barb	**Sill Cover ITDHP** W10682				
		CN50	33 29/32″ (862)	11897018	11897021
		CN54	35 29/32″ (912)	11897019	11897022
		CN62	39 29/32″ (1014)	11897020	11897023

ILLUSTRATION *NOT TO SCALE*	DESCRIPTION	LENGTH	BARE WOOD PART NO.	WHITE INTERIOR PART NO.
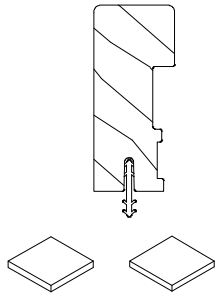	**Double Hung HP Kit** *Includes:* *1–W9969 HP Sill Cover with connecting barb* *2–Foam gasket squares* *1–Installation Instruction*			
	CN22		11886122	39256122
	CN26		11886126	39256126
	CN30		11886130	39256130
	CN32		11886132	39256132
	CN34		11886134	39256134
	CN36		11886136	39256136
	CN38		11886138	39256138
	CN42		11886142	39256142
	CN50		11886150	39256150
	CN54		11886154	39256154
	CN62		11886162	39256162

ORDERING DOUBLE HUNG REPLACEMENT SASH

When ordering replacement sash specify:

1. Specify top, bottom or pair of sash;
2. Size (using chart below):
3. Stone White, Pebble Gray, Bronze, Evergreen, Cashmere, Ebony or Arctic White exterior;
4. Hardware color – White or Almond Frost;
5. Glazing;
6. Bare wood or white interior.

Sash Sizes for Double Hung manufactured 1995 to January 2006

Daylight Opening to OM of Sash

Daylight Width + 3 1/2″ = OM Width of Sash
Daylight Height + 3 1/2″ = OM Height of Sash
NOTE: Double Hung sash is not reglazable

Width		Height	
Size	**OM Width**	**Size**	**OM Height**
CN22	19 3/16″ (487)	CN 36	17 3/16″ (437)
CN26	23 3/16″ (589)	CN 40	19 3/16″ (487)
CN30	27 3/16″ (691)	CN 48	23 3/16″ (589)
CN34	31 3/16″ (792)	CN 52	25 3/16″ (640)
CN36	33 3/16″ (843)	CN 56	27 3/16″ (691)
CN38	35 3/16″ (894)	CN 60	29 3/16″ (741)
CN42	39 3/16″ (995)	CN 64	31 3/16″ (792)
CN50	47 3/16″ (1199)	CN 68 (top)	27 3/16″ (691)
CN54	51 3/16″ (1300)	CN 68 (btm)	39 3/16″ (995)
CN62	59 3/16″ (1503)	CN 72	35 3/16″ (894)
CN54	51 3/16″ (1300)	CN 68 (btm)	39 3/16″ (995)

NOTE: Double Hung replacement sash is supplied with weather strip and hardware. CN 68 height pertains to cottage style sash. Daylight opening is the measurement of visible glass. Double Hung picture replacement sash includes attached sill filler.

Top Sash Interior View

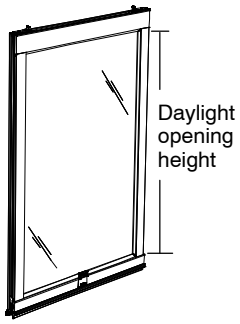

Bottom Sash Interior View

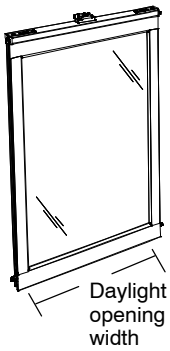

Sash Sizes for Double Hung manufactured 1/16/06 to Present

Daylight Opening to OM of Sash

Daylight Width + 3 1/4″ = OM Width of Sash
Daylight Height + 3 1/4″ = OM Height of Sash
NOTE: Double Hung sash is not reglazable

Operator Sash			
Width		Height	
Size	**OM Width**	**Size**	**OM Height**
CN22	18 15/16″ (481)	CN36	16 15/16″ (430)
CN26	22 15/16″ (583)	CN40	18 15/16″ (481)
CN30	26 15/16″ (684)	CN44	20 15/16″ (532)
CN32	28 15/16″ (735)	CN48	22 15/16″ (583)
CN34	30 15/16″ (786)	CN52	24 15/16″ (633)
CN36	32 15/16″ (837)	CN56	26 15/16″ (684)
CN38	34 15/16″ (888)	CN60	28 15/16″ (735)
CN42	38 15/16″ (988)	CN64	30 15/16″ (786)
		CN68 (top)	26 15/16″ (684)
		CN68 (btm)	38 15/16″ (989)
		CN72	34 15/16″ (887)
		CN76	36 15/16″ (938)
Picture/Transom Sash			
CN22	18 15/16″ (481)	CN16	12 15/16″ (329)
CN26	22 15/16″ (583)	CN24	20 15/16″ (532)
CN30	26 15/16″ (684)	CN36	32 15/16″ (837)
CN32	28 15/16″ (735)	CN40	36 15/16″ (938)
CN34	30 15/16″ (786)	CN44	40 15/16″ (1040)
CN36	32 15/16″ (837)	CN48	44 15/16″ (1141)
CN38	34 15/16″ (888)	CN52	48 15/16″ (1243)
CN42	38 15/16″ (988)	CN56	52 15/16″ (1345)
CN50	46 15/16″ (1192)	CN60	56 15/16″ (1446)
CN54	50 15/16″ (1294)	CN64	60 15/16″ (1548)
CN62	58 15/16″ (1497)	CN68	64 15/16″ (1649)
		CN72	68 15/16″ (1751)
		CN76	72 15/16″ (1853)

ORDERING REPLACEMENT GRILLES

When ordering replacement grilles specify:

1. Call number (using chart below);
2. Bare wood or white interior.

NOTE: The ITDH sash OM is 1/4″ smaller than IDH.

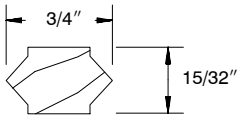

W7340

GRILLE END PROFILE

DOUBLE HUNG OPERATOR AND STATIONARY							
WIDTH				HEIGHT			
CN	SASH OM	DLO	GRILLE CUT	CN	SASH OM	DLO	GRILLE CUT
CN22	18 15/16″ (481)	15 11/16″ (398)	2W	CN36	16 15/16″ (430)	13 11/16″ (348)	2H
CN26	22 15/16″ (583)	19 11/16″ (500)	3W	CN40	18 15/16″ (481)	15 11/16″ (398)	2H
CN30	26 15/16″ (684)	23 11/16″ (602)	3W	CN44	20 15/16″ (532)	17 11/16″ (449)	2H
CN32	28 15/16″ (735)	25 11/16″ (652)	3W	CN48	22 15/16″ (583)	19 11/16″ (500)	2H
CN34	30 15/16″ (786)	27 11/16″ (703)	3W	CN52	24 15/16″ (633)	21 11/16″ (551)	2H
CN36	32 15/16″ (837)	29 11/16″ (754)	3W	CN56	26 15/16″ (684)	23 11/16″ (602)	2H
CN38	34 15/16″ (888)	31 11/16″ (805)	4W	CN60	28 15/16″ (735)	25 11/16″ (652)	2H
CN42	38 15/16″ (988)	35 11/16″ (906)	4W	CN64	30 15/16″ (786)	27 11/16″ (703)	2H
				CN68	32 15/16″ (837)	29 11/16″ (754)	2H
				*CN68C (TOP)	26 15/16″ (684)	23 11/16″ (602)	2H
				*CN68C (BTM)	38 15/16″ (989)	35 11/16″ (906)	3H
				CN72	34 15/16″ (887)	31 11/16″ (805)	3H
				CN76	36 15/16″ (938)	33 11/16″ (856)	3H

*Cottage style sash

DOUBLE HUNG PICTURE AND TRANSOM							
WIDTH				HEIGHT			
CN	SASH OM	DLO	GRILLE CUT	CN	SASH OM	DLO	GRILLE CUT
CN22	18 15/16″ (481)	15 11/16″ (398)	2W	CN16	12 15/16″ (481)	9 11/16″ (246)	1H
CN26	22 15/16″ (583)	19 11/16″ (500)	3W	CN24	20 15/16″ (532)	17 11/16″ (449)	2H
CN30	26 15/16″ (684)	23 11/16″ (602)	3W	CN36	32 15/16″ (837)	29 11/16″ (754)	4H
CN32	28 15/16″ (735)	25 11/16″ (652)	3W	CN40	36 15/16″ (938)	33 11/16″ (856)	4H
CN34	30 15/16″ (786)	27 11/16″ (703)	3W	CN44	40 15/16″ (1040)	37 11/16″ (957)	4H
CN36	32 15/16″ (837)	29 11/16″ (754)	3W	CN48	44 15/16″ (1141)	41 11/16″ (1059)	4H
CN38	34 15/16″ (888)	31 11/16″ (805)	4W	CN52	48 15/16″ (1345)	45 11/16″ (1160)	4H
CN42	38 15/16″ (988)	35 11/16″ (906)	4W	CN56	52 15/16″ (1345)	49 11/16″ (1497)	4H
CN50	46 15/16″ (1192)	43 11/16″ (1110)	5W	CN60	56 15/16″ (1446)	53 11/16″ (1497)	4H
CN54	50 15/16″ (1294)	47 11/16″ (1211)	5W	CN64	60 15/16″ (1548)	57 11/16″ (1497)	4H
CN62	58 15/16″ (1497)	55 11/16″ (1414)	6W	CN68	64 15/16″ (1649)	61 11/16″ (1567)	5H
				CN72	68 15/16″ (1781)	65 11/16″ (1665)	6H
				CN76	72 15/16″ (1833)	69 11/16″ (1770)	6H

ORDERING REPLACEMENT SCREENS FOR INTEGRITY DOUBLE HUNG

Screens are standard with a white or pebble gray aluminum surround and charcoal colored fiberglass 18x16 screen mesh. Determine the outside measurement of the existing screen. Find the sizes that correspond to the width and height indicated on the following chart.

When ordering replacement screen specify:

1. Size; – if there is no existing screen from which to obtain the OM of the screen, determine the size of the screen by using the conversion chart below. The daylight opening is the measurement of the visible glass.
2. Color – Stone White, Pebble Gray, Bronze, Evergreen, Cashmere, Ebony or Arctic White.
3. Specify cottage or equal sash when ordering CN68 height.

Screen Sizes for Integrity Double Hung manufactured 1995 to January 2006

Daylight Opening to OM of Screen

Daylight Width + 4 9/16″ = OM Width of Screen
Daylight Height x 2 + 7 19/32″ = OM Height of Screen
NOTE: Screen feature plunger type mounting system.

Width		Height	
Size	**OM Width**	**Size**	**OM Height**
CN 22	20 1/4″ (514)	CN 36	34 31/32″ (888)
CN 26	24 1/4″ (616)	CN 40	38 31/32″ (990)
CN 30	28 1/4″ (718)	CN 48	46 31/32″ (1193)
CN 34	32 1/4″ (819)	CN 52	50 31/32″ (1295)
CN 36	34 1/4″ (870)	CN 56	54 31/32″ (1396)
CN 38	36 1/4″ (921)	CN 60	58 31/32″ (1498)
CN 42	40 1/4″ (1022)	CN 64	62 31/32″ (1599)
		CN 68	66 31/32″ (1701)
		CN 72	70 31/32″ (1803)

Screen Sizes for Integrity Traditional Double Hung manufactured January 2006 to present

Daylight Opening to OM of Screen

Daylight Width + 3 13/16″ (97)= OM Width of Screen
Daylight Height x 2 + 6 3/4″ (171)= OM Height of Screen
NOTE: Screen feature plunger type mounting system.

Width		Height	
Size	**OM Width**	**Size**	**OM Height**
CN 22	19 1/2″ (495)	CN 36	34 1/8″ (867)
CN 26	23 1/2″ (597)	CN 40	38 1/8″ (968)
CN 30	27 1/2″ (699)	CN 44	42 1/8″ (1070)
CN 32	29 1/2″ (749)	CN 48	46 1/8″ (1172)
CN 34	31 1/2″ (800)	CN 52	50 1/8″ (1273)
CN 36	33 1/2″ (851)	CN 56	54 1/8″ (1375)
CN 38	35 1/2″ (902)	CN 60	58 1/8″ (1476)
CN 42	39 1/2″ (1003)	CN 64	62 1/8″ (1578)
		CN 68	66 1/8″ (1680)
		CN 72	70 1/8″ (1781)
		CN 76	74 1/8″ (1863)

NOTE: Measure top and bottom sash separately when calculating screen OM height. CN36 and CN40 screens do not feature cross bars.

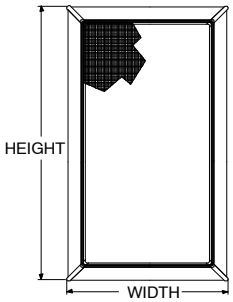

NOTE: OM of screen includes corner keys.

ILLUSTRATION *NOT TO SCALE*	DESCRIPTION	OPER./COLOR	PART NO.
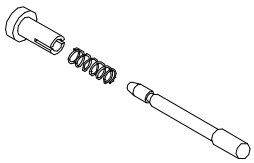	**Plunger and Spring Assembly–M060** *Includes:* *1 – Plunger bolt* *1 – Plunger bolt cap* *1 – Plunger bolt spring*	Clear Cap Off White Bolt	11900896
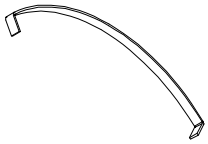	**Leaf Spring**	SS	11900897

BALANCE TUBES

When ordering replacement parts specify:

1. Part number;
2. Quantity;
3. Top or bottom sash.

NOTE: Part numbers listed are for one balance tube.

Top Sash (Mill Finish)								
Call Number Height	**22–26 CN Width (RO 22 ½–26 ½)**		**30–34 CN Width (RO 26 17/32–34 ½)**		**36–38 CN Width (RO 34 17/32–38 ½)**		**42 CN Width (RO 38 17/32–42 ½)**	
(RO Height and Width in inches)	No. Stamped on Tube	Integrity Part No.	No. Stamped on Tube	Integrity Part No.	No. Stamped on Tube	Integrity Part No.	No. Stamped on Tube	Integrity Part No.
36(36 ¼–38 7/32)	226–36	10665036	304–36	10665136	368–36	10665236	42–36	10665336
38(38 ¼–40 7/32)	226–38	10665038	304–38	10665138	368–38	10665238	42–38	10665338
40(40 ¼–42 7/32)	226–40	10665040	304–40	10665140	368–40	10665240	42–40	10665340
42(42 ¼–44 7/32)	226–42	10665042	304–42	10665142	368–42	10665242	42–42	10665342
44(44 ¼–46 7/32)	226–44	10665044	304–44	10665144	368–44	10665244	42–44	10665344
46(46 ¼–48 7/32)	226–46	10665046	304–46	10665146	368–46	10665246	42–46	10665346
48(48 ¼–50 7/32)	226–48	10665048	304–48	10665148	368–48	10665248	42–48	10665348
50(50 ¼–52 7/32)	226–50	10665050	304–50	10665150	368–50	10665250	42–50	10665350
52(52¼ –54 7/32)	226–52	10665052	304–52	10665152	368–52	10665252	42–52	10665352
54(54¼ –56 7/32)	226–54	10665054	304–54	10665154	368–54	10665254	42–54	10665354
56/68C(56 ¼–58 7/32)	226–56C68	10665056	304–56C68	10665156	368–56C68	10665256	42–56C68	10665356
58(58 ¼–60 7/32)	226–58	10665058	304–58	10665158	368–58	10665258	42–58	10665358
60(60 ¼–62 7/32)	226–60	10665060	304–60	10665160	368–60	10665260	42–60	10665360
62(62 ¼–64 7/32)	226–62	10665062	304–62	10665162	368–62	10665262	42–62	10665362
64(64 ¼–66 7/32)	226–64	10665064	304–64	10665164	368–64	10665264	42–64	10665364
66(66 ¼–68 7/32)	226–66	10665066	304–66	10665166	368–66	10665266	42–66	10665366
68(68 ¼–70 7/32)	226–68	10665068	304–68	10665168	368–68	10665268	42–68	10665368
70(70 ¼–72 7/32)	226–70	10665070	304–70	10665170	368–70	10665270	42–70	10665370
72(72 ¼–74 7/32)	226–72	10665072	304–72	10665172	368–72	10665272	42–72	10665372
74(74 ¼–76 7/32)	226–74	10665074	304–74	10665174	368–74	10665274	42–74	10665374
76(76 ¼)	226–76	10665076	304–76	10665176	368–76	10665276	42–76	10665376

Bottom Sash (Beige 349 Finish)								
Call Number Height	**22–26 CN Width (RO 22 ½–26 ½)**		**30–34 CN Width (RO 26 17/32–34 ½)**		**36–38 CN Width (RO 34 17/32–38 ½)**		**42 CN Width (RO 38 17/32–42 ½)**	
(RO Height and Width in inches)	No. Stamped on Tube	Integrity Part No.	No. Stamped on Tube	Integrity Part No.	No. Stamped on Tube	Integrity Part No.	No. Stamped on Tube	Integrity Part No.
36(36 ¼–38 7/32)	226–36	10667036	304–36	10667136	368–36	10667236	42–36	10667336
38(38 ¼–40 7/32)	226–38	10667038	304–38	10667138	368–38	10667238	42–38	10667338
40(40 ¼–42 7/32)	226–40	10667040	304–40	10667140	368–40	10667240	42–40	10667340
42(42 ¼–44 7/32)	226–42	10667042	304–42	10667142	368–42	10667242	42–42	10667342
44(44 ¼–46 7/32)	226–44	10667044	304–44	10667144	368–44	10667244	42–44	10667344
46(46 ¼–48 7/32)	226–46	10667046	304–46	10667146	368–46	10667246	42–46	10667346
48(48 ¼–50 7/32)	226–48	10667048	304–48	10667148	368–48	10667248	42–48	10667348
50(50 ¼–52 7/32)	226–50	10667050	304–50	10667150	368–50	10665250	42–50	10667350
52(52¼ –54 7/32)	226–52	10667052	304–52	10667152	368–52	10667252	42–52	10667352
54(54¼ –56 7/32)	226–54	10667054	304–54	10667154	368–54	10667254	42–54	10667354
56(56 ¼–57 31/32)	226–56	10667056	304–56	10667156	368–56	10667256	42–56C68	10667356
56(58 –58 7/32)	226–56	10667056	304–56	10667156	368–56	10667255	42–56C68	10667355
58(58 ¼–60 7/32)	226–58	10667058	304–58	10667158	368–58	10667258	42–58	10667358
60(60 ¼–61 31/32)	226–60	10667060	304–60	10667160	368–60	10667261	42–60	10667360
60(62 –62 7/32)	226–60	10667060	304–60	10667160	368–60	10667260	42–60	10667360
62(62 ¼–64 7/32)	226–62	10667062	304–62	10667162	368–62	10667262	42–62	10667362
64(64 ¼–66 7/32)	226–64	10667064	304–64	10667164	368–64	10667264	42–64	10667364
66(66 ¼–68 7/32)	226–66	10667066	304–66	10667166	368–66	10667266	42–66	10667366
68(68 ¼–70 7/32)	226–68	10667068	304–68	10667168	368–68	10667268	42–68	10667368
70(70 ¼–72 7/32)	226–70	10667070	304–70	10667170	368–70	10667270	42–70	10667370
72(72 ¼–74 7/32)	226–72	10667072	304–72	10667172	368–72	10667272	42–72	10667372
74(74 ¼–76 7/32)	226–74	10667074	304–74	10667174	368–74	10667274	42–74	10667374
76/68C(76 ¼)	226–76C68	10667076	304–76C68	10667176	368–76C68	10667276	42–76C68	10667376

BALANCE TUBES

When ordering replacement parts specify:

1. Part number;
2. Quantity;
3. Top or bottom sash.

NOTE: Part numbers listed are for one balance tube.

Top Sash (Mill or Beige 349 Finish)										
CN Height	22, 26, 30 CN Width (RO 22 1/2–30 1/2)		32 CN Width (RO 30 17/32 – 32 ½)		34–36 CN Width (RO 32 17/32 – 36 ½)		38 CN Width (RO 36 17/32 – 40 ½)		42 CN Width (RO 40 17/32 – 42 ½)	
RO Height and Width in inches	No. Stamped on Tube	Integrity Part#	No. Stamped on Tube	Integrity Part#	No. Stamped on Tube	Integrity Part#	No. Stamped on Tube	Integrity Part#	No. Stamped on Tube	Integrity Part#
36(36 ¼ – 38 7/32)	304-36	10665136	368-36	10665236	42-36	10665336	8136	10668136	8236	10668236
38(38 ¼ – 40 7/32)	304-38	10665138	368-38	10665238	42-38	10665338	8138	10668138	8238	10668238
40(40 ¼ – 42 7/32)	304-40	10665140	368-40	10665240	42-40	10665340	8140	10668140	8240	10668240
42(42 ¼ – 44 7/32)	304-42	10665142	368-42	10665242	42-42	10665342	8142	10668142	8242	10668242
44(44 ¼ – 46 7/32)	304-44	10665144	368-44	10665244	42-44	10665344	8144	10668144	8244	10668244
46(46 ¼ – 48 7/32)	304-46	10665146	368-46	10665246	42-46	10665346	8146	10668146	8246	10668246
48(48 ¼ – 50 7/32)	304-48	10665148	368-48	10665248	42-48	10665348	8148	10668148	8248	10668248
50(50 ¼ – 52 7/32)	304-50	10665150	368-50	10665250	42-50	10665350	8150	10668150	8250	10668250
52(52¼ – 54 7/32)	304-52	10665152	368-52	10665252	42-52	10665352	8152	10668152	8252	10668252
54(54¼ – 56 7/32)	304-54	10665154	368-54	10665254	42-54	10665354	8154	10668154	8254	10668254
56/68C(56 ¼ – 58 7/32)	304-56C68	10665156	368-56C68	10665256	42-56C68	10665356	8156	10668156	8256	10668256
58(58 ¼ – 60 7/32)	304-58	10665158	368-58	10665258	42-58	10665358	8158	10668158	8258	10668258
60(60 ¼ – 62 7/32)	304-60	10665160	368-60	10665260	42-60	10665360	8160	10668160	8260	10668260
62(62 ¼ – 64 7/32)	304-62	10665162	368-62	10665262	42-62	10665362	8162	10668162	8262	10668262
64(64 ¼ – 66 7/32)	304-64	10665164	368-64	10665264	42-64	10665364	8164	10668164	8264	10668264
66(66 ¼ – 68 7/32)	304-66	10665166	368-66	10665266	42-66	10665366	8166	10668166	8266	10668266
68(68 ¼ – 70 7/32)	304-68	10665168	368-68	10665268	42-68	10665368	8169	10668169	8269	10668269
70(70 ¼ – 72 7/32)	304-70	10665170	368-70	10665270	42-70	10665370	8170	10668170	8270	10668270
72(72 ¼ – 74 7/32)	304-72	10665172	368-72	10665272	42-72	10665372	8172	10668172	8272	10668272
74(74 ¼ – 76 7/32)	304-74	10665174	368-74	10665274	42-74	10665374	8174	10668174	8274	10668274
76(76 ¼)	304-76	10665176	368-76	10665276	42-76	10665376	8176	10668176	8276	10668276

BALANCE TUBE REPLACEMENT: STC

Bottom Sash (Beige 349 Finish)										
CN Height	22–26 CN Width (RO 22 1/2–26 1/2)		30 – 32 CN Width (RO 28.516 – 32 ½)		34–36 CN Width (RO 32.516 – 36 ½)		38 CN Width (RO 36 17/32 – 40 ½)		42 CN Width (RO 40 17/32 – 42 ½)	
RO Height and Width in inches	No. Stamped on Tube	Integrity Part#	No. Stamped on Tube	Integrity Part#	No. Stamped on Tube	Integrity Part#	No. Stamped on Tube	Integrity Part#	No. Stamped on Tube	Integrity Part#
36(36 ¼ – 38 7/32)	304-36	10667136	368-36	10667236	42-36	10667336	9136	10669136	9236	10669236
38(38 ¼ – 40 7/32)	304-38	10667138	368-38	10667238	42-38	10667338	9138	10669138	9238	10669238
40(40 ¼ – 42 7/32)	304-40	10667140	368-40	10667240	42-40	10667340	9140	10669140	9240	10669240
42(42 ¼ – 44 7/32)	304-42	10667142	368-42	10667242	42-42	10667342	9142	10669142	9242	10669242
44(44 ¼ – 46 7/32)	304-44	10667144	368-44	10667244	42-44	10667344	9144	10669144	9244	10669244
46(46 ¼ – 48 7/32)	304-46	10667146	368-46	10667246	42-46	10667346	9146	10669146	9246	10669246
48(48 ¼ – 50 7/32)	304-48	10667148	368-48	10667248	42-48	10667348	9148	10669148	9248	10669248
50(50 ¼ – 52 7/32)	304-50	10667150	368-50	10667250	42-50	10667350	9150	10669150	9250	10669250
52(52¼ – 54 7/32)	304-52	10667152	368-52	10667252	42-52	10667352	9152	10669152	9252	10669252
54(54¼ – 56 7/32)	304-54	10667154	368-54	10667254	42-54	10667354	9154	10669154	9254	10669254
56(56 ¼ – 57 31/32)	304-56	10667156	368-56	10667255	42-56	10667355	9156	10669155	9256	10669255
56(58 – 58 7/32)								10669156		10669256
58(58 ¼ – 60 7/32)	304-58	10667158	368-58	10667258	42-58	10667358	9158	10669158	9258	10669258
60(60 ¼ – 61 31/32)	304-60	10667160	368-60	10667260	42-60	10667359	9160	10669159	9260	10669260
60(62 – 62 7/32)						10667360		10669160		
62(62 ¼ – 64 7/32)	304-62	10667162	368-62	10667262	42-62	10667362	9162	10669162	9262	10669262
64(64 ¼ – 66 7/32)	304-64	10667164	368-64	10667264	42-64	10667364	9164	10669164	9264	10669264
66(66 ¼ – 68 7/32)	304-66	10667166	368-66	10667266	42-66	10667366	9166	10669166	9266	10669266
68(68 ¼ – 70 7/32)	304-68	10667168	368-68	10667268	42-68	10667368	9169	10669169	9269	10669269
70(70 ¼ – 72 7/32)	304-70	10667170	368-70	10667270	42-70	10667370	9170	10669170	9270	10669270
72(72 ¼ – 74 7/32)	304-72	10667172	368-72	10667272	42-72	10667372	9172	10669172	9272	10669272
74(74 ¼ – 76 7/32)	304-74	10667174	368-74	10667274	42-74	10667374	9174	10669174	9274	10669274
76/68C(76 ¼)	304-76C68	10667176	368-76C68	10667276	42-76C68	10667376	9176	10669176	9276	10669276

BALANCE TUBES

When ordering replacement parts specify:

1. Part number;
2. Quantity;
3. Top or bottom sash.

NOTE: Part numbers listed are for one balance tube.

Top Sash (Beige Finish)								
Call Number Height	22–26CN Width		30–34CN Width		36–38CN Width		42CN Width	
	No. Stamped on Tube	Integrity Part No.	No. Stamped on Tube	Integrity Part No.	No. Stamped on Tube	Integrity Part No.	No. Stamped on Tube	Integrity Part No.
36	IMP8036	10668036	IMP8136	10668136	IMP8236	10668236	IMP8336	10668336
40	IMP8040	10668040	IMP8140	10668140	IMP8240	10668240	IMP8340	10668340
44	IMP8044	10668044	IMP8144	10668144	IMP8244	10668244	IMP8344	10668344
48	IMP8048	10668048	IMP8148	10668148	IMP8248	10668248	IMP8348	10668348
52	IMP8052	10668052	IMP8152	10668152	IMP8252	10668252	IMP8352	10668352
56C68	IMP8056	10668056	IMP8156	10668156	IMP8256	10668256	IMP8356	10668356
60	IMP8060	10668060	IMP8160	10668160	IMP8260	10668260	IMP8360	10668360
64	IMP8064	10668064	IMP8164	10668164	IMP8264	10668264	IMP8364	10668364
68	IMP8069	10668069	IMP8169	10668169	IMP8269	10668269	IMP8369	10668369
72	IMP8072	10668072	IMP8172	10668172	IMP8272	10668272	–	–
76	IMP8076	10668076	IMP8176	10668176	IMP8276	10668276	–	–

Bottom Sash (Beige Finish)								
Call Number Height	22–26CN Width		30–34CN Width		36–38CN Width		42CN Width	
	No. Stamped on Tube	Integrity Part No.	No. Stamped on Tube	Integrity Part No.	No. Stamped on Tube	Integrity Part No.	No. Stamped on Tube	Integrity Part No.
36	IMP9036	10669036	IMP9136	10669136	IMP9236	10669236	IMP9336	10669336
40	IMP9040	10669040	IMP9140	10669140	IMP9240	10669240	IMP9340	10669340
44	IMP9044	10669044	IMP9144	10669144	IMP9244	10669244	IMP9344	10669344
48	IMP9048	10669048	IMP9148	10669148	IMP9248	10669248	IMP9348	10669348
52	IMP9052	10669052	IMP9152	10669152	IMP9252	10669252	IMP9352	10669352
56	IMP9056	10669056	IMP9156	10669156	IMP9256	10669256	IMP9356	10669356
60	IMP9060	10669060	IMP9160	10669160	IMP9260	10669260	IMP9360	10669360
64	IMP9064	10669064	42–64	10667364	IMP9264	10669264	IMP9364	10669364
68	IMP9069	10669069	IMP9169	10669169	IMP9269	10669269	IMP9369	10669369
68C	IMP9068	10669068	IMP9168	10669168	IMP9268	10669268	–	–
72	IMP9072	10669072	IMP9172	10669172	IMP9272	10669272	–	–
76	IMP9076	10669076	42–76C68	10667376	IMP9276	10669276	–	–

OBSOLETE DOUBLE HUNG PARTS

ILLUSTRATION *NOT TO SCALE*	DESCRIPTION	LENGTH/COLOR	PART NO.
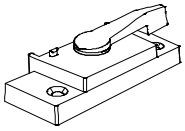	**Sash Lock** includes fasteners: *2 – #6 x 1 1/4″ Phillips flathead wood screws* *AF – 11806001* *WH – 11806002*	AF WH	10817035 10817027
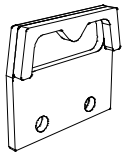	**Sash Keeper** includes fasteners: *2 – #8 x 1″ Phillips pan head screws* *AF – 11800814* *WH – 11800820*	AF WH	10817036 10817029
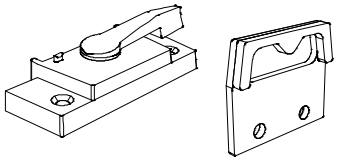	**Sash Lock and Keeper, Complete** *Includes:* *1 – Sash Lock* *2 – #6 x 1 1/4″ Phillips flathead screws* *1 – Keeper*	AF WH	11869302 11869718
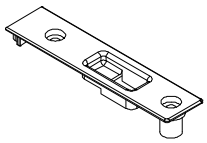	**Tilt Latch Cover** includes fasteners: *2 – #8 x 1″ Phillips pan head screws* *AF – 11800814* *WH – 11800820*	AF WH	11869713 11869717
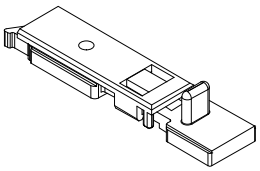 *Note: Right hand shown*	**Tilt Latch** includes fasteners: *2 – #8x3/4″ Phillips truss head screws* *AF – 11800833* *WH – 11800828*	LH AF RH AF LH WH RH WH	11869712 11869710 11869716 11869715

OBSOLETE PARTS – HARDWARE

ILLUSTRATION *NOT TO SCALE*	DESCRIPTION	LENGTH/COLOR	PART NO.
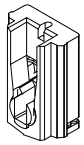	**Clutch** *NOTE: Non–handed*		10661009
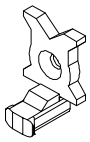	**Sash Pivot Pin** includes fasteners: *1 – Pivot Pin* *2 – #7 x 5/8″ Phillips self tapping flat head screw 11800758* *NOTE: Pivot pins are non–handed*		10660999
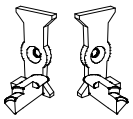	**Sash Pivot Pin**	No longer available Replace with10660999	
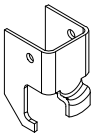	**Hanger Clip**		10661000
	Sash Lock Screws, Package *Includes:* *50 – #6 x 1 1/4″ Phillips flathead screws*	AF WH	11869305 11869727
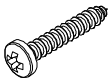	**Sash Keeper Screws, Package** *Includes:* *50 – #8 x 1″ Phillips pan head screws*	AF WH	11869306 11869728
	Tilt Latch Screws, Package *Includes:* *50 – #8 x 3/4″ Phillips truss head screws*	AF WH	11869307 11869729
	Tilt Latch Cover Screws, Package *Includes:* *50 – #8 x 1″ Phillips pan head screws*	AF WH	11869308 11869730
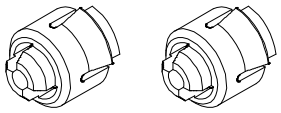	**Jamb Adjustment Inserts** *Field applied for installation adjustments. Instructions included.* *2– Inserts* *2–#7 x 2″ Torx head screws*		11840315

OBSOLETE PARTS – WEATHER STRIP AND VINYL

ILLUSTRATION *NOT TO SCALE*	DESCRIPTION	LENGTH/COLOR	PART NO.
	Sash Pivot Pin Pad 5/16″ x 11/16″ *NOTE: Adhesive backed*	GY	15607568
	Sill/Jamb Plug 5/8″ x 13/16″ x 13/16″	WH	11040354
	Sill / Jamb Plug Usage: 4/95–11/96	No longer available Replaced with 11040354	
	Sash Stops V820 Each Package of 10 144″ (3658) lineal	BG	 11860107 11869297 11860110
	Stationary Bracket		11040359
	Sill Weather Strip V1463 CN22 CN26 CN30 CN34 CN36 CN38 CN42	BG 18 13/16″ (478) 22 13/16″ (579) 26 13/16″ (681) 30 13/16″ (783) 32 13/16″ (833) 34 13/16″ (884) 38 13/16″ (986)	 17012022 17012026 17012030 17012034 17012036 17012038 17012042
	Bottom Sash Stop V1530 ITDH ITDH Egress Lineal	BG 1 7/16″ (37) 3/4″ (19) 96″ (2438)	 11870200 11870201 11870299
NOTE: Shown with adhesive tape applied.	**Bottom Rail Weather Strip** V1561 CN22 CN26 CN30 CN34 CN36 CN38 CN42	BG 17 7/16″ (443) 21 7/16″ (545) 25 7/16″ (646) 29 7/16″ (748) 31 7/16″ (799) 33 7/16″ (849) 37 7/16″ (951)	 17007922 17007926 17007930 17007934 17007936 17007938 17007942

NOTE: Refer to History pages regarding further information on weather strip changes.

OBSOLETE PARTS–WEATHER STRIP AND VINYL

When ordering replacement Integrity Double Hung weather strip specify:

1. Description;
2. Profile number;
3. Part number;
4. Quantity.

ILLUSTRATION *NOT TO SCALE*	DESCRIPTION	LENGTH	PART NO.
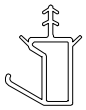	**Head Jamb Parting Stop** V248	BG	
	CN22	19 7/16″ (494)	17003122
	CN26	23 7/16″ (595)	17003126
	CN30	27 7/16″ (697)	17003130
	CN34	31 7/16″ (799)	17003134
	CN36	33 7/16″ (849)	17003136
	CN38	35 7/16″ (900)	17003138
	CN42	39 7/16″ (1002)	17003142
	Lineal	84″ (2134)	17003184
	Double Hung Head Jamb Weather Strip V192 Usage: 4/95–11/96	No longer available Replaced with V248	
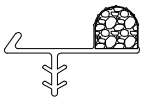	**Top Jamb Weather Strip** V169	BG	
	CN36	17″ (432)	17002036
	CN40	19″ (483)	17002040
	CN48	23″ (584)	17002048
	CN52	25″ (635)	17002052
	CN56	27″ (686)	17002056
	CN60	29″ (737)	17002060
	CN64	31″ (787)	17002064
	CN68	27″ (686)	17002056
	CN72	35″ (889)	17002072
	Lineal	144″ (3658)	17002999
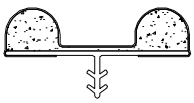	**Double Hung Head Jamb Weather Strip** V144 Usage: 4/95–10/02	No longer available Replaced with V169	
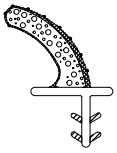	**Bottom Jamb Weather Strip** V1194	BG	
	CN36	17″ (432)	17003536
	CN40	19″ (483)	17003540
	CN48	23″ (584)	17003548
	CN52	25″ (635)	17003552
	CN56	27″ (686)	17003556
	CN60	29″ (737)	17003560
	CN64	31″ (787)	17003564
	*CN68C	39″ (889)	17003568
	CN72	35″ (889)	17003572
		144″ (3658)	17003599

* Cottage style sash

OBSOLETE PARTS–WEATHER STRIP AND VINYL

ILLUSTRATION *NOT TO SCALE*	DESCRIPTION	LENGTH	PART NO.
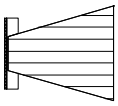	**Frame Weather Strip, Pile** V1494	BG	
	CN36	18 1/8″ (460)	17009036
	CN40	20 1/8″ (511)	17009040
	CN48	24 1/8″ (613)	17009048
	CN52	26 1/8″ (664)	17009052
	CN56	28 1/8″ (714)	17009056
	CN60	30 1/8″ (765)	17009060
	CN64	32 1/8″ (816)	17009064
	*CN68C	40 1/8″ (1019)	17009068
	72	36 1/8″ (918)	17009072
	Lineal	120″ (3048)	17009098
	Sill Weather Strip V1165	BG	
	CN22	20 3/8″ (518)	17003622
	CN26	24 3/8″ (619)	17003626
	CN30	28 3/8″(721)	17003630
	CN34	32 3/8″ (822)	17003634
	CN36	34 3/8″ (873)	17003636
	CN38	36 3/8″ (924)	17003638
	CN42	40 3/8″ (1026)	17003642
		150″ (3810)	17003699
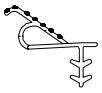	**Sill Weather Strip** V191 Usage: 4/95–9/03	No Longer Available Replaced with V1165	
	Bottom Sash Foam Weather Strip V1232	BG	
	CN36	17 3/16″ (437)	17003436
	CN40	19 3/16″ (487)	17003440
	CN48	23 3/16″ (589)	17003448
	CN52	25 3/16″ (640)	17003452
	CN56	27 3/16″ (691)	17003456
	CN60	29 3/16″ (741)	17003460
	CN64	31 3/16″ (792)	17003464
	CN72	35 3/16″ (894)	17003472
	*CN68BC	39 3/16″ (995)	17003468
	Lineal	144″ (3658)	17003499
	Sill Weather Strip V189 Usage: 11/96–9/03	No Longer Available Replaced with V1232	
	Sill Weather Strip V161 Usage: 4/95–11/96	No Longer Available Replaced with V189	

* Cottage style sash

OBSOLETE PARTS–WEATHER STRIP AND VINYL

ILLUSTRATION *NOT TO SCALE*	DESCRIPTION	LENGTH	PART NO.
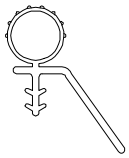	**Check Rail Weather Strip** V150	BG	
	CN22	19 1/8″ (487)	17001822
	CN26	23 1/8″ (588)	17001826
	CN30	27 1/8″ (690)	17001830
	CN34	31 1/8″ (791)	17001834
	CN36	33 1/8″ (842)	17001836
	CN38	35 1/8″ (893)	17001838
	CN42	39 1/8″ (995)	17001842
	Lineal	150″ (3810)	17001899
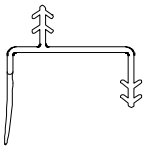	**Head Jamb Weather Strip** V140 For double hung picture and transom units	BG	
	CN22	19 21/64″ (491)	17002322
	CN26	23 21/64″ (593)	17002326
	CN30	27 21/64″ (694)	17002330
	CN34	31 21/64″ (796)	17002334
	CN36	33 21/64″ (847)	17002336
	CN38	35 21/64″ (897)	17002338
	CN42	39 21/64″ (999)	17002342
	CN50	47 21/64″ (1202)	17002350
	CN54	51 21/64″ (1304)	17002354
	CN62	59 21/64″ (1507)	17002362
	Jamb Weather Strip V140 For double hung picture and transom units	BG	
	CN16	12 5/64″ (307)	17002316
	CN48	44 5/64″ (1120)	17002348
	CN52	48 5/64″ (1221)	17002352
	CN56	52 5/64″ (1323)	17002356
	CN60	56 5/64″ (1424)	17002360
	CN64	60 5/64″ (1526)	17002364
	*CN68C	64 5/64″ (1628)	17002368

* Cottage style sash

OBSOLETE PARTS–WEATHER STRIP AND VINYL

ILLUSTRATION *NOT TO SCALE*	DESCRIPTION	LENGTH	PART NO.
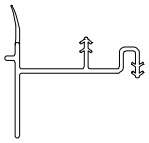	**Sill Interior Stop Weather Strip** V141 BG For double hung picture and transom units		
	CN22	19 21/64″ (491)	17002422
	CN26	23 21/64″ (593)	17002426
	CN30	27 21/64″ (694)	17002430
	CN34	31 21/64″ (796)	17002434
	CN36	33 21/64″ (847)	17002436
	CN38	35 21/64″ (897)	17002438
	CN42	39 21/64″ (999)	17002442
	CN50	47 21/64″ (1202)	17002450
	CN54	51 21/64″ (1304)	17002454
	CN62	59 21/64″ (1507)	17002462
	Lineal	144″ (3658)	17002499
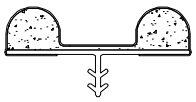 *NOTE: Field service items (for replacement only) on units produced before November 18, 1996. Replaces V144 and V161*	**Jamb Hardware Weather Strip** V167	BG	
	CN36	34″ (864)	17002836
	CN40	38″ (965)	17002840
	CN48	46″ (1168)	17002848
	CN52	50″ (1270)	17002852
	CN56	54″ (1372)	17002856
	CN60	58″ (1473)	17002860
	CN64	62″ (1575)	17002864
	CN72	70″ (1778)	17002872
	Lineal	144″ (3658)	17002899
a) 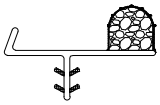 b) c) d) *NOTE: For complete replacement of weather strip on units produced between November 18, 1996 and October 24, 2005.*	**Field Service Weather Strip Kit** Usage: 12/2011 to present *Includes:* *4 – V169 Top jamb weather strip (a)* *2 – Checkrail pads (b)* *2 – V1494 Pile weather strip (2 inch piece)(c)* *2 – Sill Jamb Plug (d)* *1 – Instruction 19972110*		
	CN36	34″ (864)	11860900
	CN40	38″ (965)	11860901
	CN48	46″ (1168)	11860902
	CN52	50″ (1270)	11860903
	CN56	54″ (1372)	11860904
	CN60	58″ (1473)	11860905
	CN64	62″ (1575)	11860906
	Cottage CN68		11860907
	CN72	70″ (1778)	11860908

OBSOLETE PARTS – WEATHER STRIP AND VINYL

ILLUSTRATION *NOT TO SCALE*	DESCRIPTION	LENGTH	PART NO.
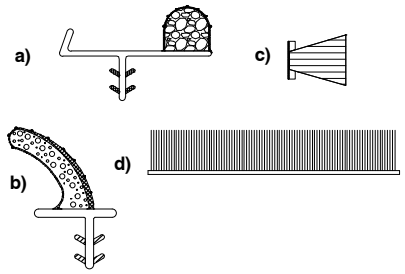 *NOTE: For complete replacement of weather strip on units produced between November 18, 1996 and October 24, 2005.*	**Field Service Weather Strip Kit** Usage: Kit used prior to 12/2011 *Includes:* *2 – V169 Top jamb weather strip (a)* *2 – V1194 Bottom jamb weather strip(b)* *2 – V1494 Pile weather strip(c)* *2 – Checkrail pads (d)* *1 – Instruction 19972110*		NA replace with current weather strip kit
	CN36	34″ (864)	
	CN40	38″ (965)	
	CN48	46″ (1168)	
	CN52	50″ (1270)	
	CN56	54″ (1372)	
	CN60	58″ (1473)	
	CN64	62″ (1575)	
	Cottage CN68		
	CN72	70″ (1778)	
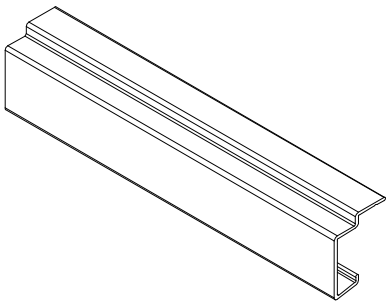	**Sill Filler***		
	A441	SW	
	CN22	19 3/16″ (487)	19611422
	CN26	23 3/16″ (589)	19611426
	CN30	27 3/16″ (691)	19611430
	CN34	31 3/16″ (792)	19611434
	CN36	33 3/16″ (843)	19611436
	CN38	35 3/16″ (894)	19611438
	CN42	39 3/16″ (995)	19611442
	CN50	47 3/16″ (1199)	19611450
	CN54	51 3/16″ (1300)	19611454
	CN62	59 3/16″ (1503)	19611462
		PB	
	CN22	19 3/16″ (487)	18611522
	CN26	23 3/16″ (589)	18611526
	CN30	27 3/16″ (691)	18611530
	CN34	31 3/16″ (792)	18611534
	CN36	33 3/16″ (843)	18611536
	CN38	35 3/16″ (894)	18611538
	CN42	39 3/16″ (995)	18611542
	CN50	47 3/16″ (1199)	18611550
	CN54	51 3/16″ (1300)	18611554
	CN62	59 3/16″ (1503)	18611562
		AR	
	CN22	19 3/16″ (487)	18611422
	CN26	23 3/16″ (589)	18611426
	CN30	27 3/16″ (691)	18611430
	CN34	31 3/16″ (792)	18611434
	CN36	33 3/16″ (843)	18611436
	CN38	35 3/16″ (894)	18611438
	CN42	39 3/16″ (995)	18611442
	CN50	47 3/16″ (1199)	18611450
	CN54	51 3/16″ (1300)	18611454
	CN62	59 3/16″ (1503)	18611462

TO ORDER REPLACEMENT WOOD PARTS

When ordering replacement wood parts specify:

1. Profile number;
2. Part number;
3. Length;
4. Handing (if applicable);
5. Bare wood or white interior.

ILLUSTRATION *NOT TO SCALE*	DESCRIPTION	LENGTH	BARE WOOD PART NO.	WHITE INTERIOR PART NO.
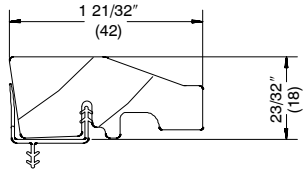 W7430 – Head Jamb and Jamb Stop, Picture and Transom Units V140 – Head Jamb Weather Strip included	**Interior Stop– Head Jamb** W7430			
	CN22	19 3/8″ (492)	31500422	39200422
	CN26	23 3/8″ (594)	31500426	39200426
	CN30	27 3/8″ (695)	31500430	39200430
	CN34	31 3/8″ (797)	31500434	39200434
	CN36	33 3/8″ (848)	31500436	39200436
	CN38	35 3/8″ (898)	31500438	39200438
	CN42	39 3/8″ (1000)	31500442	39200442
	CN50	47 3/8″ (1203)	31500450	39200450
	CN54	51 3/8″ (1305)	31500454	39200454
	CN62	59 3/8″ (1508)	31500462	39200462
	Interior Stop– Jamb W7430			
	CN16	12 39/64″ (320)	31500516	39200516
	CN48	44 39/64″ (1133)	31500548	39200548
	CN52	48 39/64″ (1235)	31500552	39200552
	CN56	52 39/64″ (1836)	31500556	39200556
	CN60	56 39/64″ (1438)	31500560	39200560
	CN64	60 39/64″ (1539)	31500564	39200564
	Cottage CN68	64 39/64″ (1641)	31500568	39200568
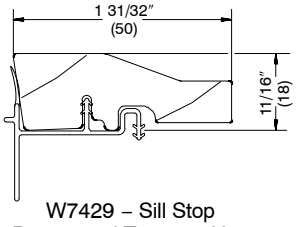 W7429 – Sill Stop Picture and Transom Unit V141 – Sill Weather Strip included	**Interior Stop–Sill** W7429			
	CN22	19 3/8″ (492)	31500322	39200322
	CN26	23 3/8″ (594)	31500326	39200326
	CN30	27 3/8″ (695)	31500330	39200330
	CN34	31 3/8″ (797)	31500334	39200334
	CN36	33 3/8″ (848)	31500336	39200336
	CN38	35 3/8″ (898)	31500338	39200338
	CN42	39 3/8″ (1000)	31500342	39200342
	CN50	47 3/8″ (1203)	31500350	39200350
	CN54	51 3/8″ (1305)	31500354	39200354
	CN62	59 3/8″ (1508)	31500362	39200362

ILLUSTRATION *NOT TO SCALE*	DESCRIPTION	LENGTH	BARE WOOD PART NO.	WHITE INTERIOR PART NO.
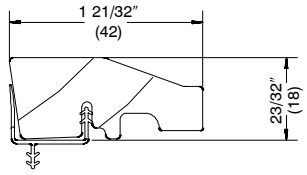 W7430 – Head Jamb and Jamb Stop, Picture and Transom Units V140 – Head Jamb Weather Strip included	**Interior Stop– Head Jamb** W7430			
	CN22	19 3/8″ (492)	31500422	39200422
	CN26	23 3/8″ (594)	31500426	39200426
	CN30	27 3/8″ (695)	31500430	39200430
	CN34	31 3/8″ (797)	31500434	39200434
	CN36	33 3/8″ (848)	31500436	39200436
	CN38	35 3/8″ (898)	31500438	39200438
	CN42	39 3/8″ (1000)	31500442	39200442
	CN50	47 3/8″ (1203)	31500450	39200450
	CN54	51 3/8″ (1305)	31500454	39200454
	CN62	59 3/8″ (1508)	31500462	39200462
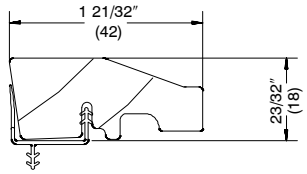 W7430 – Head Jamb and Jamb Stop, Picture and Transom Units V140 – Head Jamb Weather Strip included	**Interior Stop– Jamb** W7430			
	CN16			
	CN48			
	CN52	12 39/64″ (320)	31500516	39200516
	CN56	44 39/64″ (1133)	31500548	39200548
	CN60	48 39/64″ (1235)	31500552	39200552
	CN64	52 39/64″ (1836)	31500556	39200556
	Cottage CN68	56 39/64″ (1438)	31500560	39200560
		60 39/64″ (1539)	31500564	39200564
		64 39/64″ (1641)	31500568	39200568
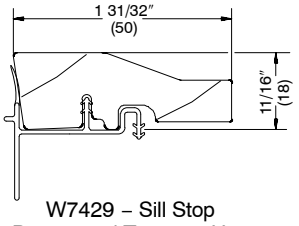 W7429 – Sill Stop Picture and Transom Unit V141 – Sill Weather Strip included	**Interior Stop–Sill** W7429			
	CN22	19 3/8″ (492)	31500322	39200322
	CN26	23 3/8″ (594)	31500326	39200326
	CN30	27 3/8″ (695)	31500330	39200330
	CN34	31 3/8″ (797)	31500334	39200334
	CN36	33 3/8″ (848)	31500336	39200336
	CN38	35 3/8″ (898)	31500338	39200338
	CN42	39 3/8″ (1000)	31500342	39200342
	CN50	47 3/8″ (1203)	31500350	39200350
	CN54	51 3/8″ (1305)	31500354	39200354
	CN62	59 3/8″ (1508)	31500362	39200362
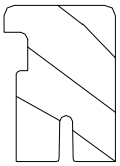 W8793 – Sill Cover – uses V803 connecting barb, not included	**Sill Cover** W8793			
	CN22	19 29/32″ (506)	31509222	39209222
	CN26	23 29/32″ (608)	31509226	39209226
	CN30	27 29/32″ (709)	31509230	39209230
	CN34	31 29/32″ (811)	31509234	39209234
	CN36	33 29/32″ (862)	31509236	39209236
	CN38	35 29/32″ (912)	31509238	39209238
	CN42	39 29/32″ (1014)	31509242	39209242
	CN50	47 29/32″ (1217)	31509250	39209250
	CN54	51 29/32″ (1319)	31509254	39209254
	CN62	59 29/32″ (1522)	31509262	39209262

ATTENTION ON RETROFIT UNITS ORDERED BEFORE 1/20/03: If the installer is retrofitting units ordered before 1/20/03 with the HP Sill Liner Kit, they must replace the tilt latches. This will allow the unit to achieve the certified structural performance rating.

ILLUSTRATION *NOT TO SCALE*	DESCRIPTION	LENGTH	BARE WOOD PART NO.	WHITE INTERIOR PART NO.
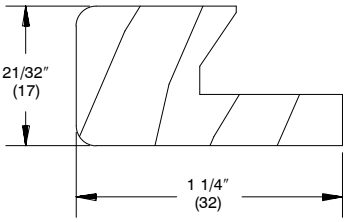	**IDH HP Field Applied Sill Liner Kit – Picture/Transom** *Includes:* *1–W8586 HP Sill Liner (Adhesive tape applied)* *4–#8 x 1 1/2" Phillips panhead screws–11865161* *1–Installation Instruction–19970048*			
	CN22	20 3/32″ (511)	11886022	39256022
	CN26	24 3/32″ (612)	11886026	39256026
	CN30	28 3/32″ (714)	11886030	39256030
	CN34	32 3/32″ (815)	11886034	39256034
	CN36	34 3/32″ (866)	11886036	39256036
	CN38	36 3/32″ (917)	11886038	39256038
	CN42	40 3/32″ (1019)	11886042	39256042
	CN50	48 3/32″ (1222)	11886050	39256050
	CN54	52 3/32″ (1327)	11886054	39256054
	CN62	60 3/32″ (1527)	11886062	39256062
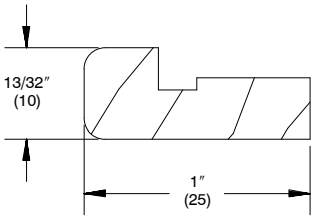	**IDH HP Field Applied Sill Liner Kit – Operator** *Includes:* *1–W8088 HP Sill Liner (Adhesive tape applied)* *4–#8 x 1 1/2" Phillips panhead screws–11865161* *1–Installation Instruction–19970048*			
	CN22	20 3/32″ (511)	11887022	39257022
	CN26	24 3/32″ (612)	11887026	39257026
	CN30	28 3/32″ (714)	11887030	39257030
	CN34	32 3/32″ (815)	11887034	39257034
	CN36	34 3/32″ (866)	11887036	39257036
	CN38	36 3/32″ (917)	11887038	39257038
	CN42	40 3/32″ (1019)	11887042	39257042

BALANCE TUBES

For use on units produced before 1/2006.

When ordering replacement parts specify:

1. Part number;
2. Quantity;
3. Top or bottom sash.

NOTE: Part numbers listed are for one balance tube.

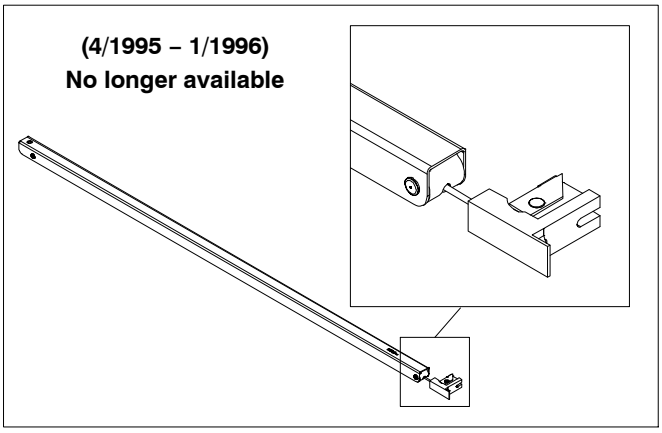

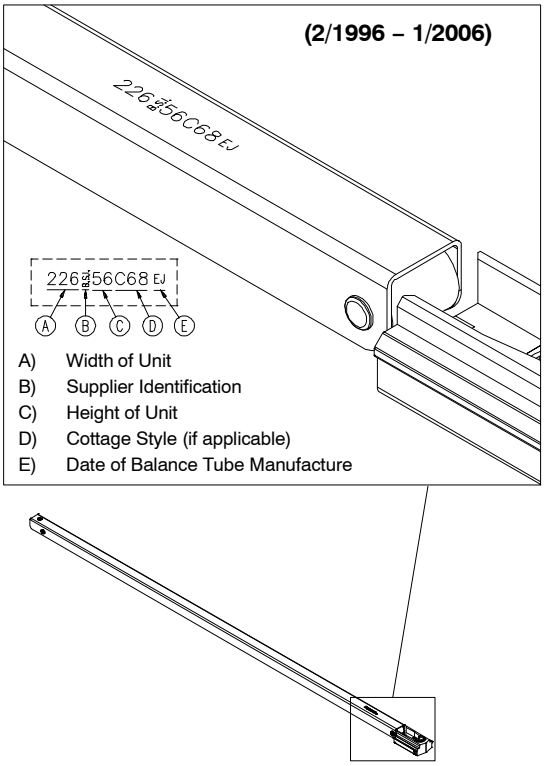

Top Sash (Mill Finish)								
Call Number Height	**22–26CN Width**		**30–34CN Width**		**36–38CN Width**		**42CN Width**	
	No. Stamped on Tube	Integrity Part No.	No. Stamped on Tube	Integrity Part No.	No. Stamped on Tube	Integrity Part No.	No. Stamped on Tube	Integrity Part No.
36	226–36	10661036	304–36	10662036	368–36	10663036	42–36	10664036
40	226–40	10661040	304–40	10662040	368–40	10663040	42–40	10664040
48	226–48	10661048	304–48	10662048	368–48	10663048	42–48	10664048
52	226–52	10661052	304–52	10662052	368–52	10663052	42–52	10664052
56C68	226–56C68	10661056	304–56	10662056	368–56	10663056	42–56C68	10664056
60	226–60	10661060	304–60	10662060	368–60	10663060	42–60	10664060
64	226–64	10661064	304–64	10662064	368–64	10663064	42–64	10664064
72	226–72	10661072	304–72	10662072	368–72	10663072	42–72	10664072

Bottom Sash (Beige Finish)								
Call Number Height	**22–26CN Width**		**30–34CN Width**		**36–38CN Width**		**42CN Width**	
	No. Stamped on Tube	Integrity Part No.	No. Stamped on Tube	Integrity Part No.	No. Stamped on Tube	Integrity Part No.	No. Stamped on Tube	Integrity Part No.
36	226–36	10661136	304–36	10662136	368–36	10663136	42–36	10664136
40	226–40	10661140	304–40	10662140	368–40	10663140	42–40	10664140
48	226–48	10661148	304–48	10662148	368–48	10663148	42–48	10664148
52	226–52	10661152	304–52	10662152	368–52	10663152	42–52	10664152
56	226–56	10661156	304–56	10662156	368–56	10663156	42–56	10664156
60	226–60	10661160	304–60	10662160	368–60	10663160	42–60	10664160
64	226–64	10661164	304–64	10662164	368–64	10663164	42–64	10664164
72C68	226–72C68	10661172	304–72	10662172	368–72	10663172	42–72	10664172

TILTING OR REMOVING DOUBLE HUNG SASH

1. To tilt the bottom sash inward, simply raise the sash about 3″ (76). Unlock the tilt latch (found on the check rail) by sliding the release inward and tilt the sash toward you to a horizontal position. See illustration 1.

   To completely remove the sash from the frame, hold the sash at 90° to the frame as shown in illustration 1. Release the sash pivot pins from the clutch assemblies by first raising the entire sash 1″– 2″ (25–51). Then raise just one side of the sash further until the sash pivot pins clear the jambs, remove to interior. See illustration 1.

2. To tilt the top sash inward, lower the sash about 1/2 way. Unlock each tilt latch by sliding the release toward the center of the unit and tilt the sash toward you to a horizontal position. See illustration 2.

3. To completely remove the sash from the frame, hold the sash at 90° to the frame as shown in illustration 2. Release the sash pivot pins from the clutch assemblies by first raising the entire sash 1″– 2″ (25–51). Then raise just one side of the sash further until the sash pivot pins clear the jambs, remove to interior. See illustration 2.

NOTE: Care should be taken as the top sash is tilted in or out to avoid any damage to the frame strip.

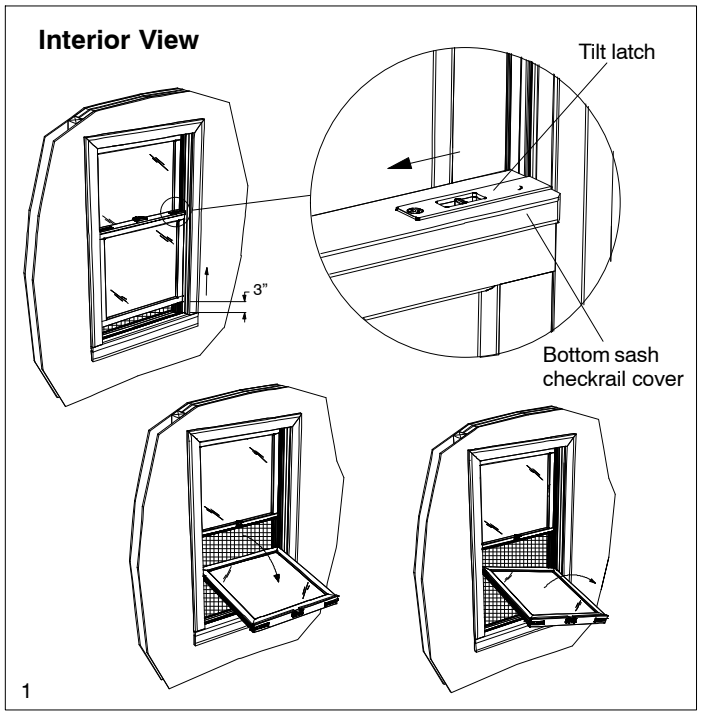

1

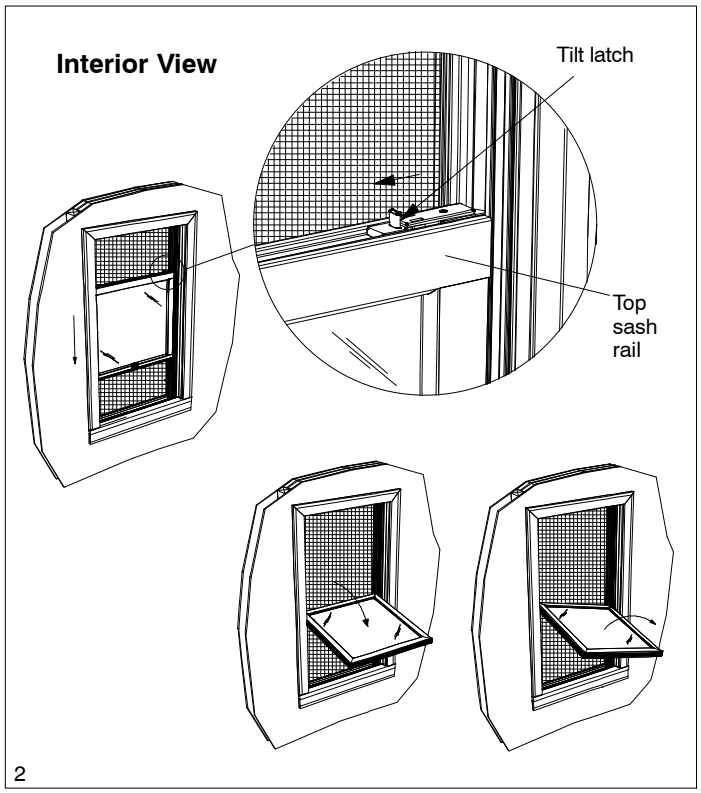

2

INSTALLING DOUBLE HUNG SASH

1. To install the top sash, hold the sash horizontally at 90 degrees to the frame as shown in illustration 3. Guide the sash pivot pins into the exterior sash track on the jambs above the clutch assemblies, lower both sash pins onto the clutch cams making sure the bottom of the sash is level when pins are completely engaged. Slide each tilt latch release toward the center of the unit and gently ease the sash into position. Release each latch into the exterior sash track, lower the sash slightly then raise to the fully closed position. Check operation of sash. See illustration 3.
2. To install the bottom sash repeat the installation procedure used for installing the top sash. Utilize the interior sash track and lower sash into the closed position, check operation of sash and lock.

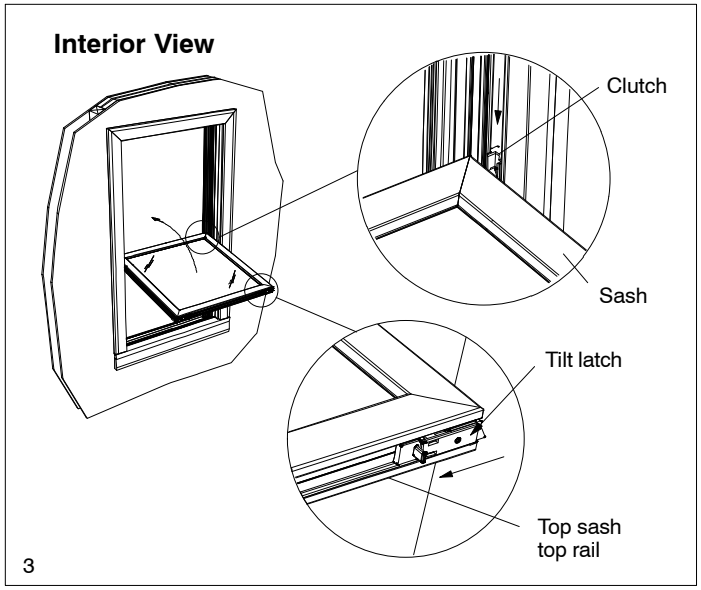

3

REMOVING SCREEN

3. To remove the screen to the interior, grasp the pull tab located at the center and pull the lower screen plungers to release as shown in illustration 4. Push screen outward and pull down slightly. Turn the screen sideways and bring into dwelling.

NOTE: Removing the sash will allow easier removal of the screen.

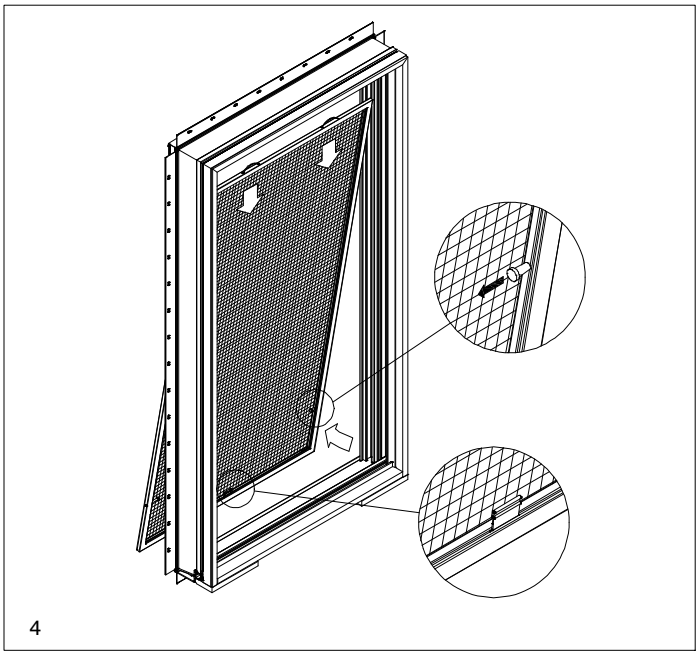
4

INSTALLING SCREEN

1. To install the screen from the interior, grasp the screen frame with the pull tab and insert top leaf springs into the head jamb screen channel. Pull the bottom of the screen toward the interior. Pull the side plungers one at a time into the jamb screen channel to seat the screen flush against the side jamb. See illustration 5.

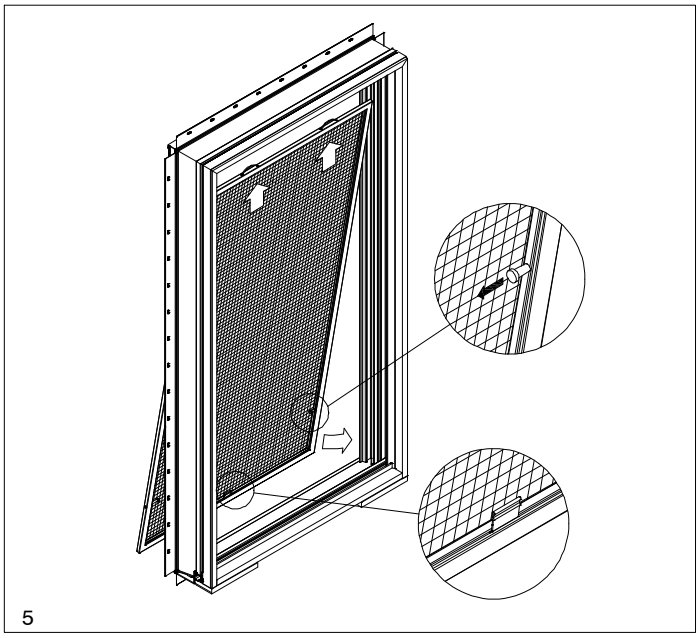

5

SERVICE – SILL COVER REPLACEMENT AFTER 02–22–2010

You will need to supply:
Utility Knife

1. Remove the sill cover. Replace the connecting barb if it is damaged during the removal.

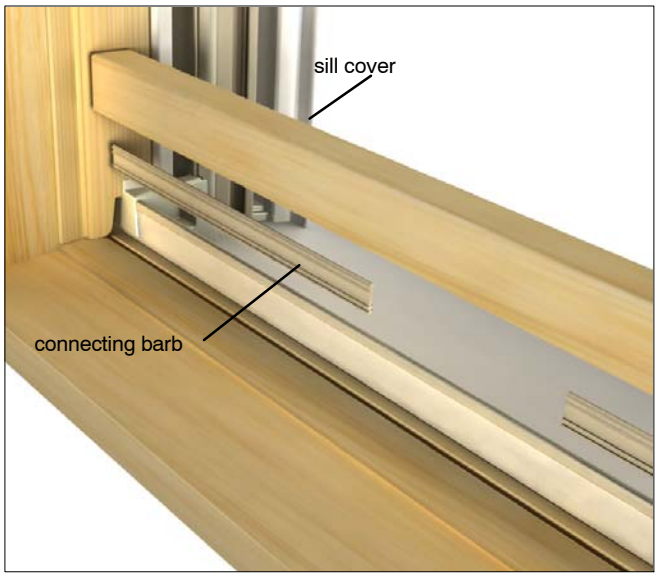

2. Apply sill tape below lip of sill cover, aligning the end of the tape flush with the end of the cover.

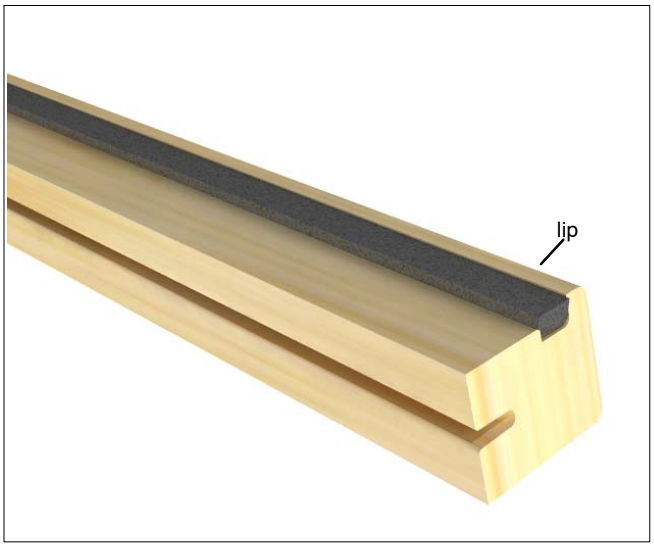

3. Cut tape at the opposite end of the cover. Make sure the tape is flush to the end of the cover. Discard excess tape.

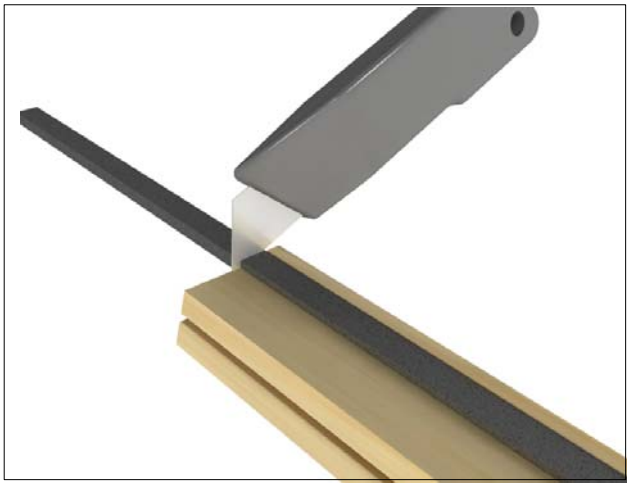

4. Center the sill cover and angle it at 30 degrees to fit the connecting barbs into the kerf. Shift the sill cover tight against the jamb liner gasket and roll sill cover into position.

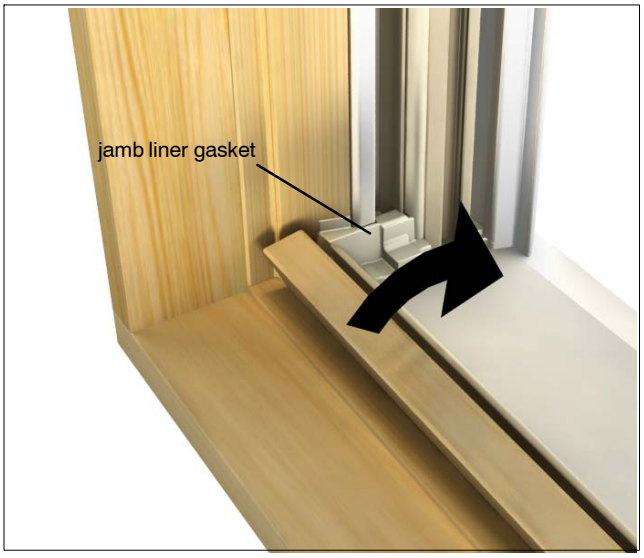

REPLACING BALANCES TUBES STANDARD/SPECIAL SIZES

1. Remove both sash.
2. Insert a screwdriver into the clutch cams. While holding onto the screwdriver firmly with both hands, rotate the cams to the horizontal released position. Slide the clutch to the bottom of the balance tube. See figure 1.

Figure 1: Move clutches to the released position

3. Remove the parting stop with a needle nose pliers. See figure 2a. (On Special Size Units Remove the sash stop for access to balance tube plug. Remove the plug with a needle nose pliers). See figure 2b.

Figure 2a:

Figure 2b:

4. Remove the jamb carrier with a needle nose pliers. Be sure to grab the cover by the interior side, away from the foam weather strip. See figure 3.

Figure 3: Remove jamb carrier

5. Remove the balance tube from the frame by pushing up on the tube, releasing the hanger clip from the hole in the jamb. See figure 4.

Figure 4: Remove balance tube

6. Removing the foam block at the top of the balance tube channel makes for easier installation of the new balance tube but is optional. See figure 5.

Figure 5: Move foam block out of the way

7. Position the hanger clip so that it sticks out from the balance tube. See figure 6.

Figure 6: Position hanger clip

8. If removed earlier, replace the foam balance tube block at the top of the balance tube channel. (Waiting to replace this block until after the new balance tube is installed may make installing the balance easier.)

9. Make sure the clutches on the new balance are in the released, horizontal position. Slide the new balance tube up into the balance tube channel in the frame. Follow the motion outlined in figure 7. The hanger clip should engage in the hole in the frame. Tug firmly on the balance to make sure the clip is properly seated in the hole.

Figure 7: Install new balance tube

10. Reinstall the jamb carrier starting at the sill. Fit the cover over the sill block then press into place, working your way up the jamb. See figure 8.

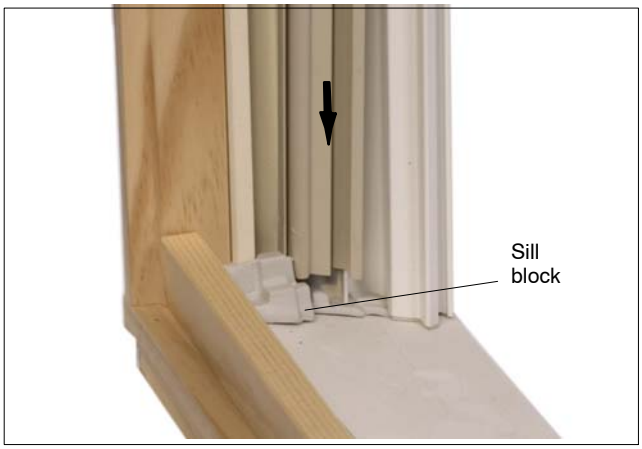

Figure 8: Reinstall jamb carrier

11. Replace the head jamb parting stop being careful not to tear the jamb weather strip.

Tools needed: Stiff putty knife or pry bar
90° Allen wrench (or similarly fashioned tool)
Rubber mallet

Parts needed: Stationary sill bracket
Frame to sash seal
Interior sill stop (W7429)
Interior head jamb and jamb stop (W7430)
Sill interior stop weather strip (V141)

Removing Stationary Sash

1. Begin by removing the wood jamb interior stops with a stiff putty knife as shown in illustration 6. Next remove the vinyl jamb interior stop weather strip.

NOTE: Exercise care in removing the vinyl stops from the frame kerf as they will be reused.

2. Remove the wood head jamb interior stops and vinyl interior stop weather strip in the same fashion as in step 1. See illustration 7.

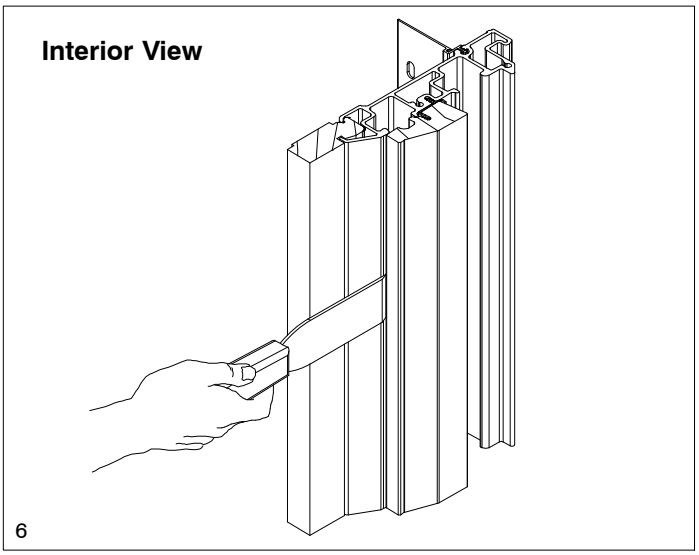

6

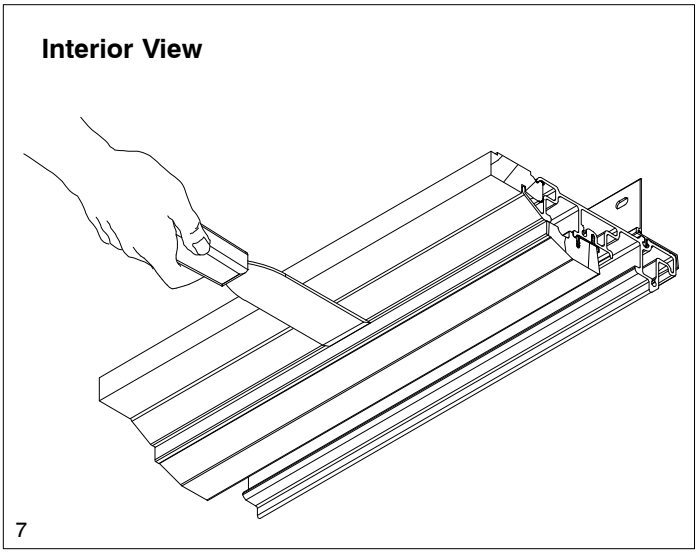

7

Removing Stationary Sash (Continued)

3. Using the 90° Allen wrench (or similarly fashioned tool) hook the wood sill interior stop in the balance tube cavity as shown in illustration 8. Remove the vinyl sill stop weather strip.

NOTE: Interior wood sill stop may be removed with a stiff putty knife but use caution as Ultrex sill may crack or break.

4. Bend the sill stationary bracket(s) up to allow for sash removal. See illustration 9.
5. Carefully pull the top of the sash into the interior with a stiff putty knife or pry bar. Grasp the sash and lift out of the frame. See illustration 10.
6. Once the stationary sash is out, bend the sill stationary brackets back to their original position before replacing sash.

NOTE: Before replacing the sash, make sure that the sash to frame adhesive foam found along the Ultrex jamb and head jamb is intact to ensure a proper seal.

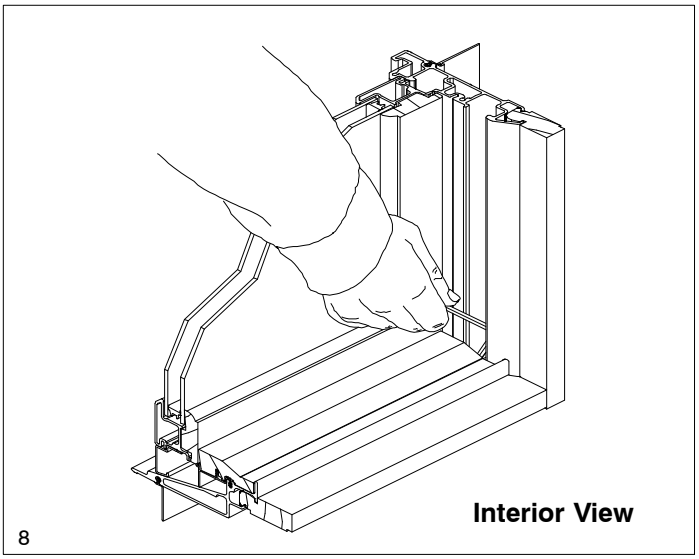

8

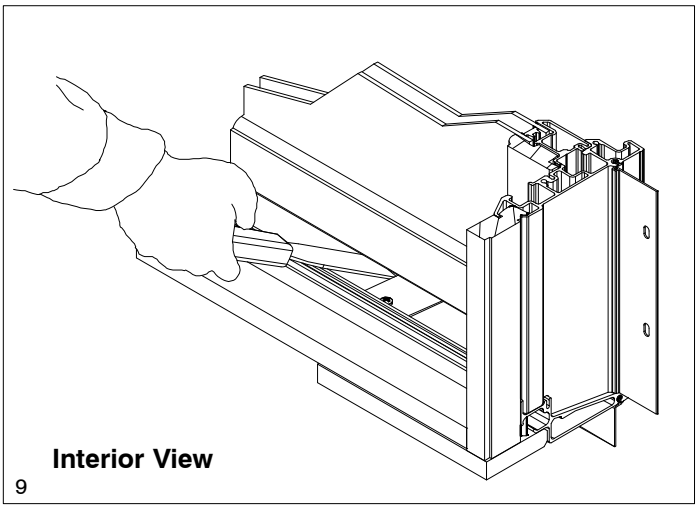

9

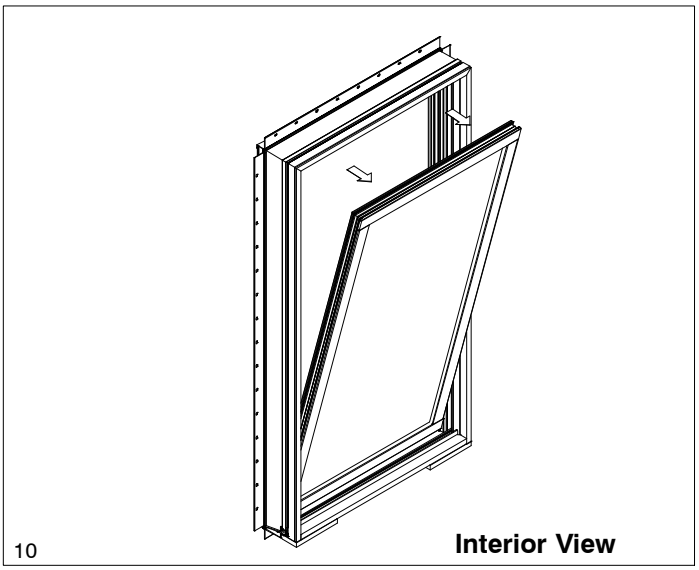

10

Replacing stationary sash

1. Grasp the sash and set the bottom into the frame first. Be sure that the stationary sill bracket engages with the sill filler. Tilt the top of the sash into the frame. See illustration 11.

NOTE: Sill filler is supplied and attached to replacement sash.

2. Replace the bottom and top vinyl stop weather strip by placing the connecting barb into the frame kerf. Replace the wood top stop and the bottom stop. If necessary, tap into place with rubber mallet. Replace the jamb vinyl stop weather strip and wood jamb stop in the same manner as the head jamb and sill stop.

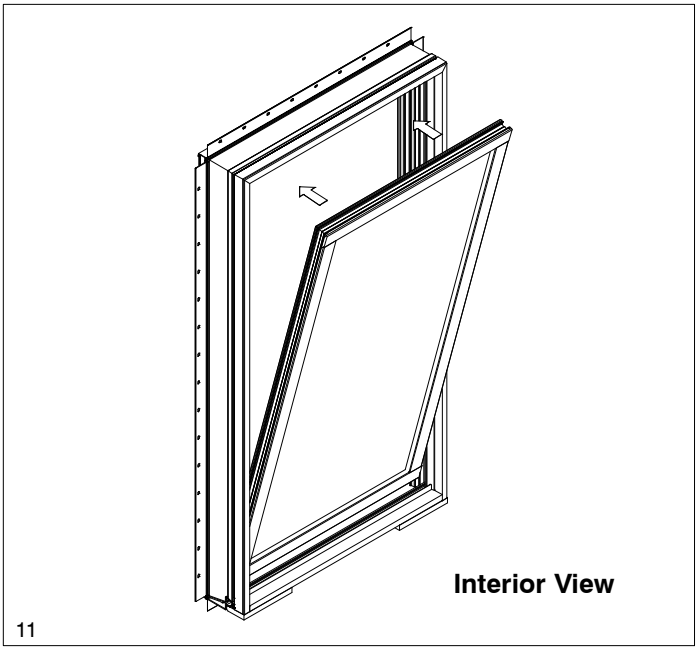

11

OBSOLETE SERVICE – BALANCE TUBE REPLACEMENT

Tools needed: Standard flat screwdriver
Tape measure
Pencil
Balance tube channel spreader (see note below)

Parts needed: Balance tube(s)

1. Remove sash (see Index, Tilting or Removing Double Hung Sash).
2. Release clutches by rotating cam to the released position with a standard screwdriver. Carefully raise to the bottom of the balance tube. See illustration 12.
3. Remove balance tube foam block from head jamb channel. If replacing the bottom balance tube, slide the sash stop down the balance tube and squeeze to remove. See illustration 13.
4. Insert balance tube channel spreader below clutch assembly and turn to spread Ultrex channel. See illustration 14.

NOTE: It is necessary to spread the Ultrex channel in order to remove the balance tube clutch assembly. The balance tube channel spreader can be fabricated from a 1/2″ x 3/4″ x 6″ piece of oak or hard wood. Round off the corners to 11/16″. See illustration 14. The handle of a screwdriver may also be a suitable substitute provided that its diameter is no larger the 5/8″. Insert handle below clutch assembly and pry to the interior.

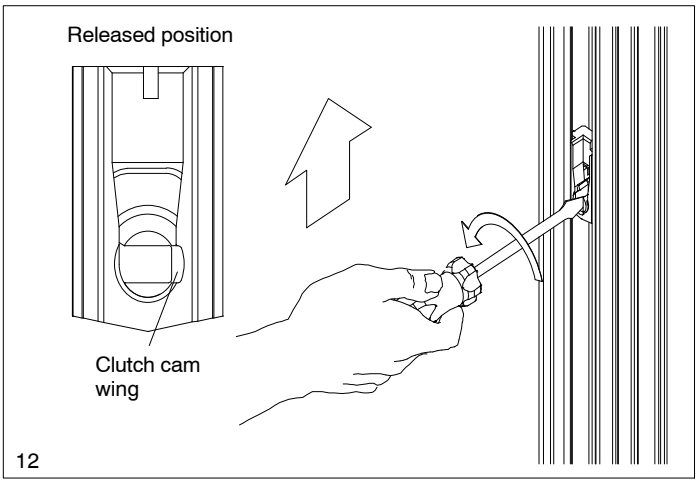

12

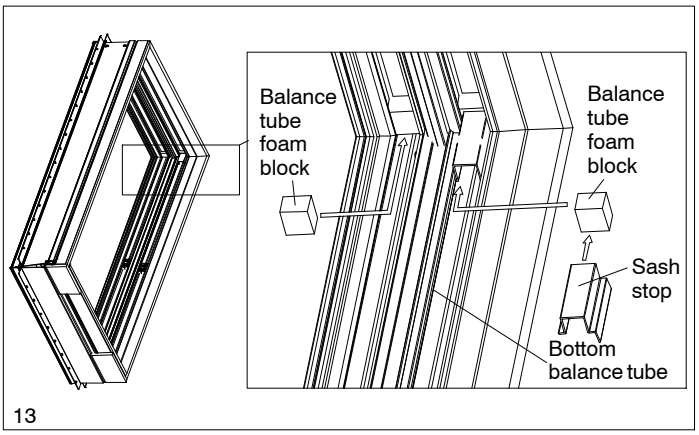

13

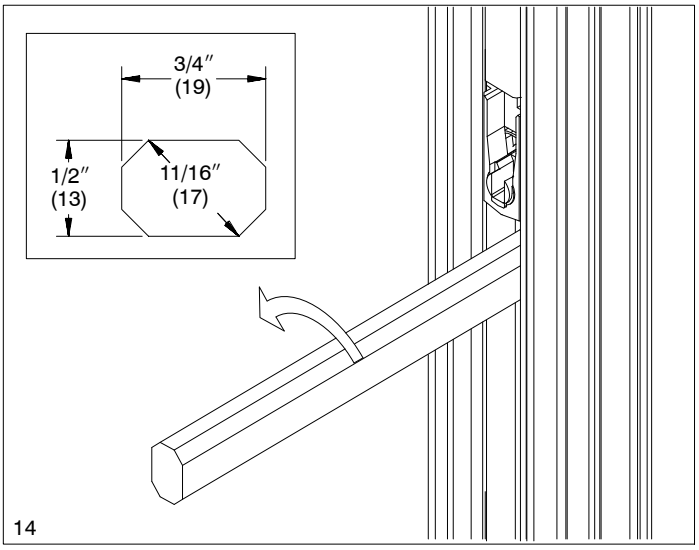

14

5. Insert screwdriver into the cam and rotate clutch assembly toward the exterior so that one side clears the operating channel. Remove clutch assembly from operating channel. See illustration 15.
6. Firmly push balance tube assembly up toward the head jamb to release hanger clip from the jamb. See illustration 16.
7. Remove balance tube assembly from the operating channel.
8. Insert the new balance tube in the operating channel half way up the jamb. Slide the assembly upward against the head jamb and place the hanger clip in the jamb slot as shown in illustration 17. Check balance tube to ensure hanger clip has engaged with slot.

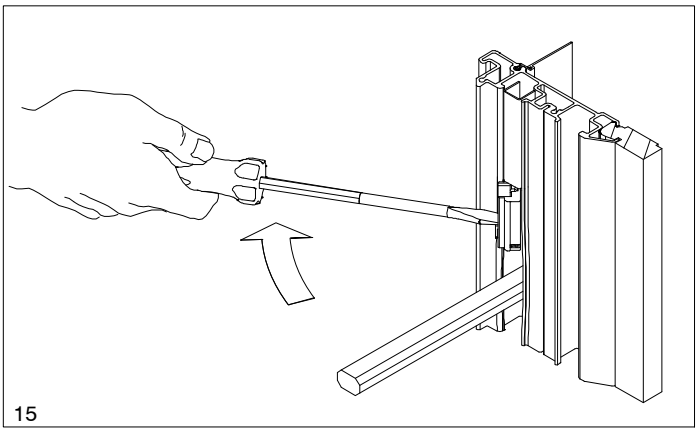
15

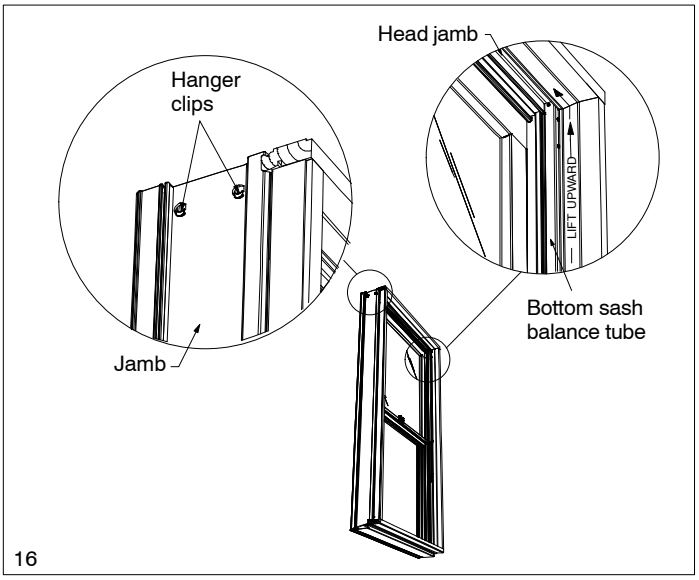

16

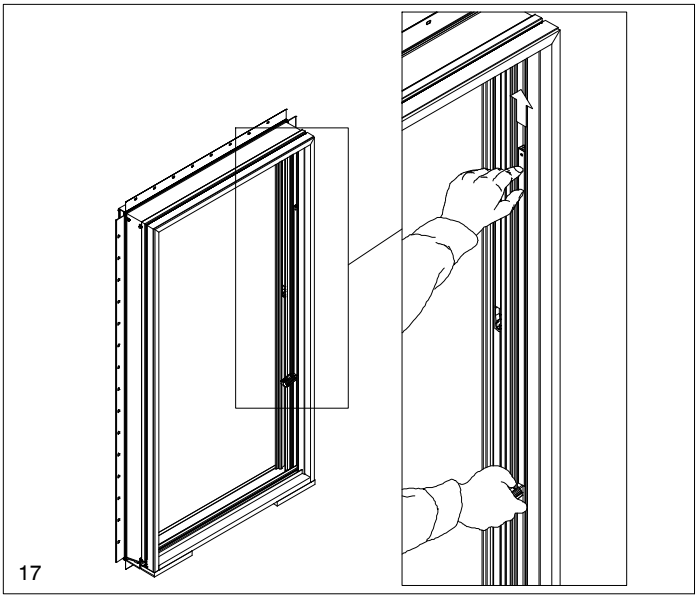
17

9. Position the clutch assembly for insertion into the operating channel. Using a flat screwdriver, rotate the clutch partly into the channel. See illustration 18.

NOTE: Before installing new balance tube assembly in the operating channel, make sure the clutch cam is in the released position (the wing of the cam should be to the interior of the jamb). See illustration 12.

10. Insert the screwdriver into the spring opening of the cam and (using the same rotating motion as before) pivot the clutch into position.

11. Place a pencil mark on the jamb 12″ from the end of the balance tube. Insert the screwdriver into the cam and pull the clutch downward to the pencil mark. Using the screwdriver, rotate the cam into the locked position as shown in illustration 19. (The wing of the cam should be pointed down.) Repeat the same procedure for the opposing clutch.

NOTE: It is critical that opposing clutches are of equal distance from the bottom of the balance tube.

12. Replace balance tube foam block and sash stop.

13. Reinstall sash. (see Index, Installing Double Hung Sash).

14. Check sash operation. If any binding occurs during sash installation, stop immediately and make sure the sash pivot pins are completely engaged in the clutch cam.

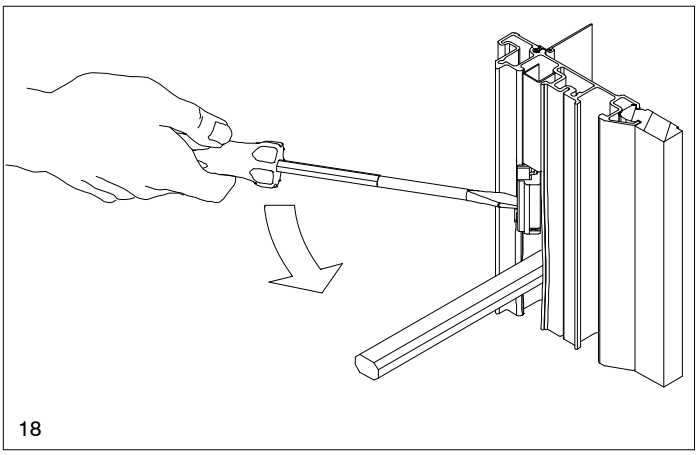

18

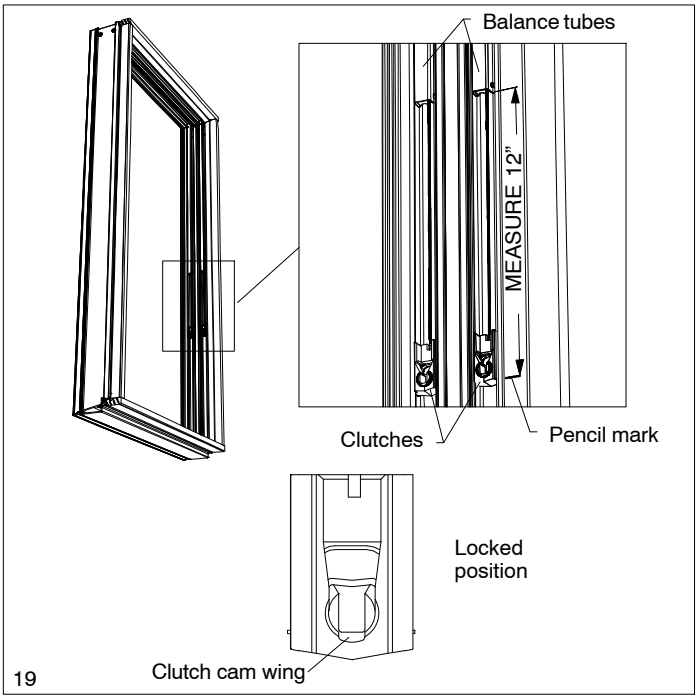

19

REPLACING SASH LOCKS

Tools needed: #2 Phillips screwdriver

Parts needed: Sash lock
#6x1 1/4″ Phillips flathead wood screws

1. Remove the bottom sash. (see Index, Tilting or Removing Double Hung Sash).
2. Remove the two #6x1 1/4″ Phillips flathead wood screws from the sash lock. See illustration 19.
3. Using the location of the old lock as a guide, install the new sash lock. Check to see that the wood screws are properly seated.
4. Replace the sash and check for proper operation. (see Index, Installing Double Hung Sash).

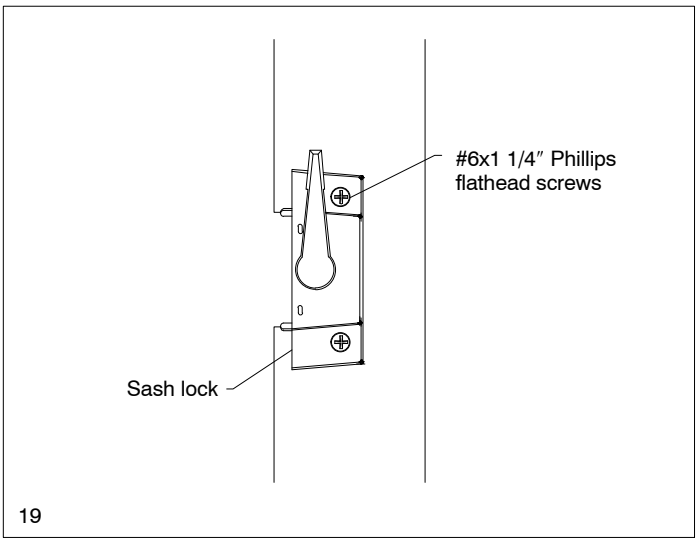

19

REPLACING SASH KEEPERS

Tools needed: #2 Phillips screwdriver

Parts needed: Sash keeper
#8x1″ Phillips pan head screws

1. Remove the top and bottom sash (see Index, Tilting or Removing Double Hung Sash).
2. Remove the two #8x1″ Phillips pan head screws from the sash keeper. See illustration 20.
3. Using the location of the old keeper as a guide, install the new keeper. Check to see that the wood screws are properly seated.
4. Replace both sash and check for proper operation. (see Index, Installing Double Hung Sash).

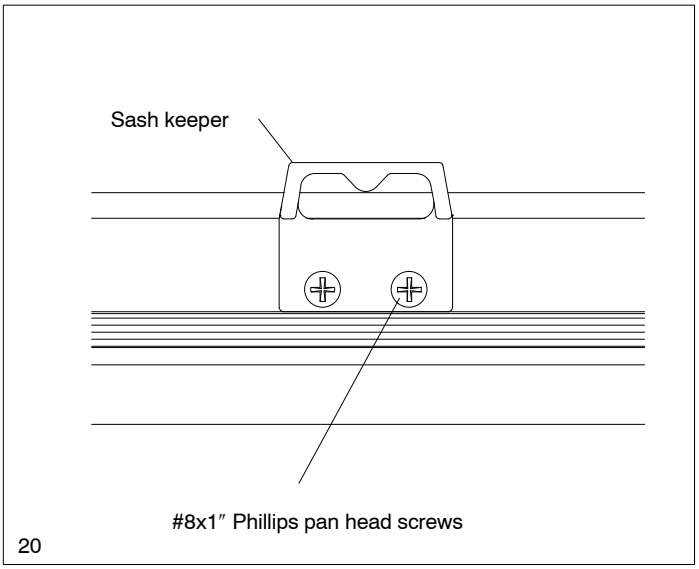

20

REPLACING TILT LATCHES

Tools needed: #2 Phillips screwdriver

Parts needed: Tilt latch
#8x3/4″ Phillips truss head screw

1. Remove the top and bottom sash (see Index, Tilting or Removing Double Hung Sash).
2. Remove the #8x3/4″ Phillips truss head screw attaching the tilt latch to the top rail of the top sash. See illustration 21.
3. Using the location of the old tilt latch as a guide, install the new tilt latch.

NOTE: *Tilt latches are handed from the exterior. Make sure the correct tilt latch is being installed. Do not over tighten screws as tilt latches may not operate properly.*

4. Check new tilt latch to ensure smooth operation and adjust as necessary by tightening or loosing the screw.
5. Replace both sash (see Index, Installing Double Hung Sash).

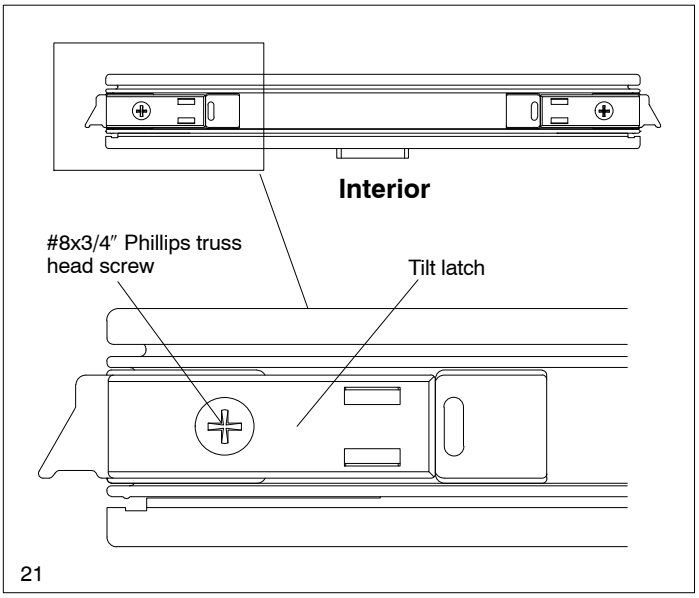

21

REPLACING TILT LATCH COVERS (BOTTOM SASH)

Tools needed: #2 Phillips screwdriver

Parts needed: Tilt latch cover
#8x1″ Phillips pan head screw

1. Remove bottom sash (see Tilting or Removing Double Hung Sash).
2. Remove the two #8x1″ Phillips pan head screws attaching the tilt latch cover and tilt latch to bottom sash check rail. See illustration 22.
3. Place the new tilt latch cover over the tilt latch and replace screws.

NOTE: *Tilt latch covers are not handed. Do not over tighten as tilt latches may not operate properly.*

4. Check tilt latch to ensure smooth operation and adjust as necessary by tightening or loosening screws.
5. Replace sash (see Index, Installing Double Hung Sash).

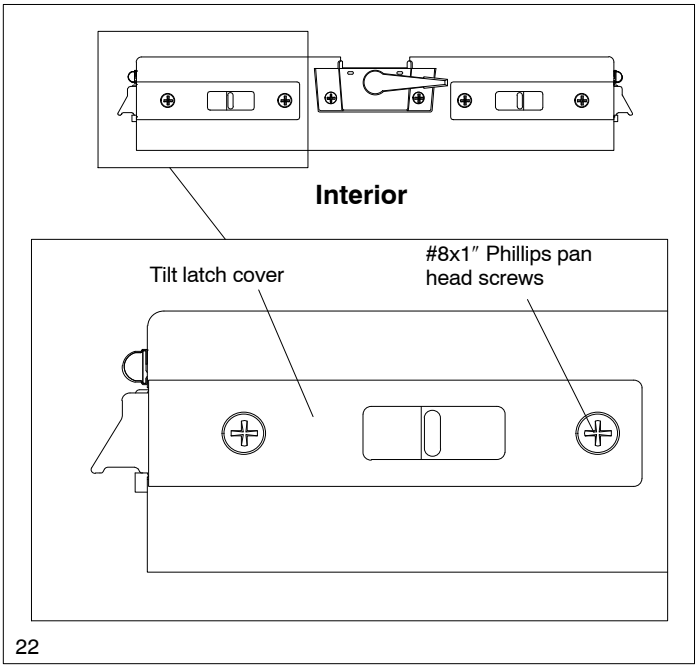

22

REPLACING SASH PIVOT PINS

Tools needed: #2 Phillips screwdriver

Parts needed: Sash pivot pin
#7x5/8″ Phillips flathead screw

NOTE: Sash pivot pins are non–handed.

1. Remove sash (See Index, Tilting or Removing Double Hung Sash).
2. Remove the #7x5/8″ Phillips flathead screw. See illustration 23.
3. Using the location of the old pivot pin as a guide, install the new pivot pin. Check to see that the screw is properly seated.
4. Replace the sash (see Index, Installing Double Hung Sash).
5. Check for proper sash operation.

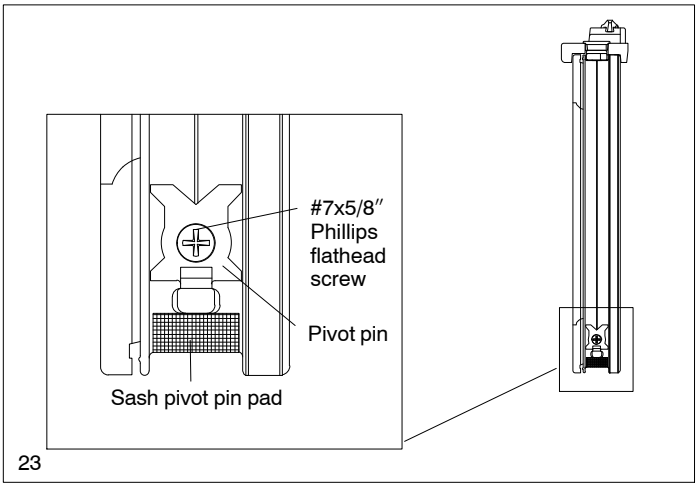

23