POLYGON

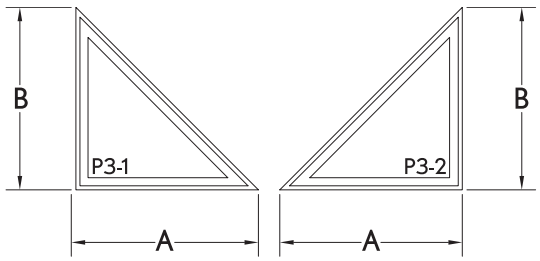

90° TRIANGLE

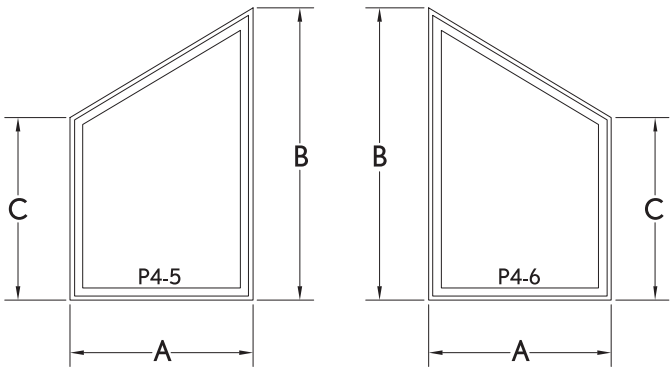

TRAPEZOID

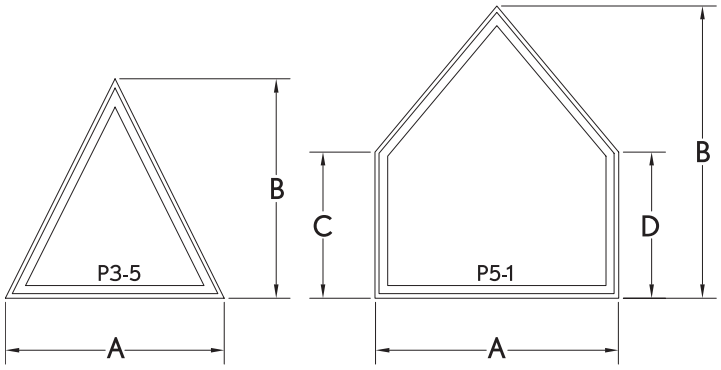

ISOSCELES TRIANGLE

PENTAGON

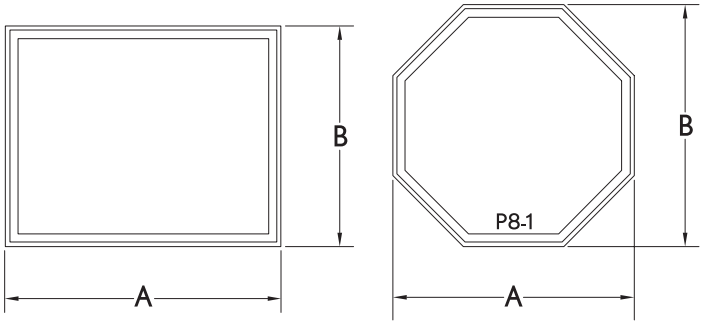

90° RECTANGLE

OCTAGON

How to Specify

When ordering a Trapezoid, Triangle, or Rectangle window, provide a sketch of the unit as viewed from the exterior, also include key Rough Opening dimensions.

Example: To order a window of a Trapezoid opening provide the measurements of A, B, and C as indicated. For other shapes, give the dimensions shown.

To ensure the proper unit for field mulling applications, specify CA/AWN or DH/DR frame type.

SPECIFICATION NOTES:

Maximum rough opening: 49 sq. ft. (44,593 sq. cm.)

Maximum 97" (2464 mm) rough opening width.

Maximum 96 1/2" (2451 mm) rough opening height.

Minimum 13 7/8" (352 mm) rough opening width rectangular; P3-1, P3-2, P3-5, P4-5, P4-6, P5-1 units.

Minimum 13 3/8" (340 mm) rough opening height rectangular; P3-1, P3-2, P3-5, P4-5, P4-6, P5-1 units.

Minimum 19 1/8" (486 mm) rough opening width & height P8-1 units

Minimum 8" (203 mm) rough opening for shortest leg— P3-1, P3-2, P3-5, P4-5, P4-6, P5-1, and P8-1 units

MULTIPLE ASSEMBLIES

Multiple assemblies can be factory mulled:

For ICA/IAWN direct glaze unit: up to 4 units wide by 1 unit high. MAXIMUM ROUGH OPENING: not to exceed 113" x 71 5/8" OR up to 2 units wide by 2 units high. MAXIMUM ROUGH OPENING: not to exceed 73" x 94 3/4".

For ITDH/ITGL direct glaze unit: up to 4 units wide by 1 unit high. MAXIMUM ROUGH OPENING: not to exceed 113 1/2" x 76 1/4" OR up to 2 units wide by 2 units high. MAXIMUM ROUGH OPENING: not to exceed 84" x 92".

For ISPD/ISFD direct glaze unit: up to 1 unit wide by 2 units high. MAXIMUM ROUGH OPENING: not to exceed 72" x 100 1/2".

For IIFD direct glaze unit: up to 3 unit wide by 1 units high. MAXIMUM ROUGH OPENING: not to exceed 109 15/16" x 96" OR up to 2 units wide by 2 units high. MAXIMUM ROUGH OPENING: not to exceed 73 5/8" x 102 1/2".

NOTE: Rectangular field assemblies with jamb extension: ADD 1/4" (6 mm) to WIDTH, and 1/8" (3 mm) to HEIGHT of Frame, Rough, and Masonry Opening sizes with exception of assemblies including Casement or Awning.

Field mulling window assemblies beyond the above limitations is not recommended.

Field mulling door assemblies beyond 110" x 112" is not recommended.

POLYGON

Construction Details

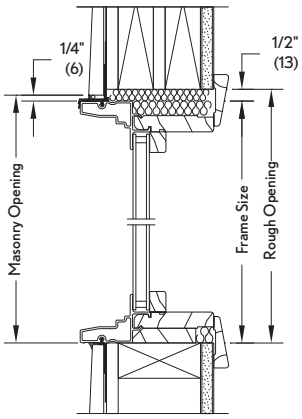

Casement Polygon
Head Jamb and Sill

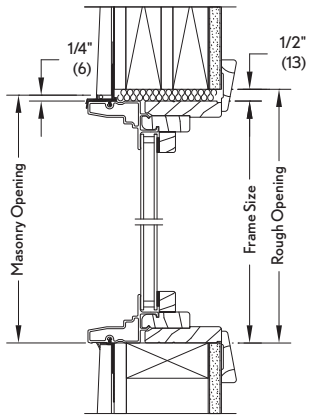

Double Hung/Door Polygon
Head Jamb and Sill

Mullion Details

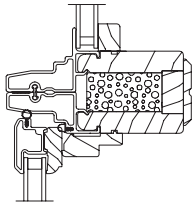

Direct Glaze
Polygon/Transom
Over Casement/Awning

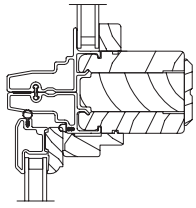

Direct Glaze
Polygon/Transom
Over Casement/Awning
with Structural Mull
Reinforcement Block*

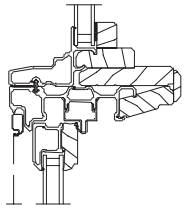

Direct Glaze
Polygon/Transom
Over Double Hung

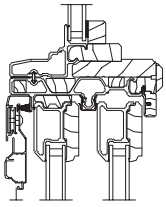

Direct Glaze
Polygon/Transom
Over Sliding Patio Door

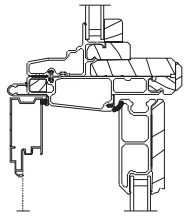

Direct Glaze
Polygon/Transom
Over Inswing French Door

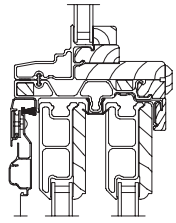

Direct Glaze
Polygon/Transom
Over Sliding French Door

Details not to scale.

Note: Drip cap supplied on direct glaze rectangles only.

* To be used on 2 wide by 2 high assemblies.